HOSHIZAKI

Service Manual

Refrigerated Kitchen Equipment
Steelheart B Series

Models
Undercounter
Worktop
Prep Table

hoshizakiamerica.com

Number: 73247
Issued: 3-22-2021
Revised: 9-21-2021

⚠ WARNING

Only qualified service technicians should install and service the appliance. To obtain the name and phone number of your local Hoshizaki Certified Service Representative, visit www.hoshizaki.com. No service should be undertaken until the technician has thoroughly read this Service Manual. Failure to service and maintain the appliance in accordance with this manual will adversely affect safety, performance, component life, and warranty coverage. Proper installation is the responsibility of the installer. Product failure or property damage due to improper installation is not covered under warranty.

Hoshizaki provides this manual primarily to assist qualified service technicians in the service of the appliance.

Should the reader have any questions or concerns which have not been satisfactorily addressed, please call, send an e-mail message, or write to the Hoshizaki Technical Support Department for assistance.

Phone: 1-800-233-1940; (770) 487-2331
Fax: 1-800-843-1056; (770) 487-3360

E-mail: techsupport@hoshizaki.com

HOSHIZAKI AMERICA, INC.
618 Highway 74 South
Peachtree City, GA 30269
Attn: Hoshizaki Technical Support Department

Web Site: www.hoshizaki.com

NOTE: To expedite assistance, all correspondence/communication MUST include the following information:

- Model Number _____
- Serial Number _____
- Complete and detailed explanation of the problem.

IMPORTANT
This manual should be read carefully before the appliance is serviced. Read the warnings and guidelines contained in this booklet carefully as they provide essential information for the continued safe use, service, and maintenance of the appliance. Retain this booklet for any further reference that may be necessary.

CONTENTS

Important Safety Information 4
I. Construction and Refrigeration Circuit Diagram 8
A. Construction 8
B. Refrigeration Circuit Diagram 10
II. Sequence of Operation and Service Diagnosis 11
A. Sequence of Operation Flow Chart 11
1. UR/WR: Refrigerator 11
2. SR: Refrigerator 12
3. UF/WF: Freezer 13
B. Service Diagnosis 14
C. Control Module Check 20
D. Thermistor Check 23
E. Diagnostic Table 24
III. Controls and Adjustments 27
A. Temperature Settings 27
B. Defrost 28
C. Safety Devices 29
D. Perimeter and Mullion Heaters (UF/WF only) 29
IV. Refrigeration Circuit and Component Service Information 30
A. Refrigeration Circuit Service Information 32
B. Component Service Information 35
V. Preparing the Appliance for Periods of Non-Use 36
VI. Disposal 37
VII. Technical Information 38
A. Electrical and Refrigerant Data 38
B. Wiring Diagrams 39
1. UR/WR27, UR/WR36, UR/WR48 (except glass door), and SR36 39
2. UF/WF27, SR27, and SR48 40
3. UR/WR48 (glass door), UR/WR60, and UR/WR72 41
4. UF/WF48, UF/WF60, SR60, and SR72 42

Important Safety Information

Throughout this manual, notices appear to bring your attention to situations which could result in death, serious injury, damage to the appliance, or damage to property.

⚠ DANGER	**Indicates a hazardous situation that, if not avoided, will result in death or serious injury.**
⚠ WARNING	**Indicates a hazardous situation that, if not avoided, could result in death or serious injury.**
NOTICE	**Indicates a situation that, if not avoided, could result in damage to the appliance or property.**
IMPORTANT	**Indicates important information about the use and care of the appliance.**

⚠ DANGER

Risk of Fire or Explosion

Flammable Refrigerant Used

- Follow handling instructions carefully in compliance with U.S. government regulations.
- Do not use mechanical devices to defrost.
- Do not puncture refrigerant tubing. Risk of fire or explosion due to puncture of refrigerant tubing; follow handling instructions carefully.
- Component parts shall be replaced with like components.
- Servicing shall be done by factory authorized service personnel to minimize the risk of possible ignition due to incorrect parts or improper service.
- Consult instruction manual/service manual before attempting to install or service this product. All safety precautions must be followed.
- Dispose of properly in accordance with federal or local regulations.
- Do not place any potential ignition sources in or near the appliance.

Risque De Feu Ou D'Explosion

Le Frigorigène Est Inflammable

- Suivre attentivement les instructions de manipulation conformément à la réglementation gouvernementale.
- Ne pas utiliser d'appareils mécaniques pour dégivrer le réfrigérateur.
- Ne pas perforer la tubulure contenant le frigorigène. Risque de feu ou d'explosion si la tubulure contenant le frigorigène est perforée; suivre les instructions de manutention avec soin.
- Les pièces des composants doivent être remplacées par des pièces et accessoires équivalents.
- L'entretien doit être effectué par le personnel de service autorisé par le fabricant afin de minimiser les risques d'inflammation attribuables à l'installation d'une pièce inadéquate ou à la mauvaise exécution du service.
- Consulter le manuel du propriétaire/ guide de réparation avant de tenter une réparation. Toutes les mesures de sécurité doivent être respectées.
- Éliminer conformément aux règlements fédéraux ou locaux.
- Ne placez aucune source d'inflammation potentielle dans ou près de l'appareil.

⚠ WARNING

The appliance should be destined only to the use for which it has been expressly conceived. Any other use should be considered improper and therefore dangerous. The manufacturer cannot be held responsible for injury or damage resulting from improper, incorrect, and unreasonable use. Failure to install, operate, and maintain the appliance in accordance with this manual will adversely affect safety, performance, component life, and warranty coverage. **To reduce the risk of death, electric shock, serious injury, or fire, follow basic precautions including the following:**

- Only qualified service technicians should install and service the appliance.
- Wear appropriate personal protective equipment (PPE) when servicing the appliance.
- The appliance must be installed in accordance with applicable national, state, and local codes and regulations.
- Appliance is heavy. Use care when lifting or positioning. Work in pairs when needed to prevent injury or damage. Do not lift using the top section or the doors/drawers.
- To reduce the risk of electric shock, do not touch the plug with damp hands.
- Unplug the appliance before servicing.
- The appliance requires an independent power supply of proper capacity. See the nameplate for electrical specifications. Failure to use an independent power supply of proper capacity can result in a tripped breaker, blown fuse, damage to existing wiring, or component failure. This could lead to heat generation or fire.
- **THE APPLIANCE MUST BE GROUNDED.** The appliance is equipped with a NEMA 5-15 three-prong grounding plug to reduce the risk of potential shock hazards. It must be plugged into a properly grounded, independent 3-prong wall outlet. If the outlet is a 2-prong outlet, it is your personal responsibility to have a qualified electrician replace it with a properly grounded, independent 3-prong wall outlet. Do not remove the ground prong from the power cord and do not use an adapter plug. Failure to follow these instructions may result in death, electric shock, or fire.
- Do not use an extension cord.
- Do not use an appliance with a damaged power cord. The power cord should not be altered, jerked, bundled, weighed down, pinched, or tangled. Such actions could result in electric shock or fire. To unplug the appliance, be sure to pull the plug, not the cord, and do not jerk the cord.
- The GREEN ground wire in the factory-installed power cord is connected to the appliance. If it becomes necessary to remove or replace the power cord, be sure to connect the power cord's ground wire.
- Do not splash, pour, or spray water directly onto or into the appliance. This might cause short circuit, electric shock, corrosion, or failure.
- Do not make any alterations to the appliance. Alterations could result in electric shock, injury, fire, or damage to the appliance.
- The appliance is not intended for use by persons (including children) with reduced physical, sensory, or mental capabilities, or lack of experience and knowledge, unless they have been given supervision or instruction concerning use of the appliance by a person responsible for their safety.

⚠ WARNING, continued

- Children should be properly supervised around the appliance.
- Do not climb, stand, or hang on the appliance or doors/drawers or allow children or animals to do so. Do not climb into the appliance or allow children or animals to do so. Death or serious injury could occur or the appliance could be damaged.
- Be careful not to pinch fingers when opening and closing the doors/drawers or rail cover (SR models) or when handling food pans. Be careful when opening and closing the doors/drawers or rail cover when children are in the area.
- Open and close the doors/drawers and rail cover (SR models) with care. Opening the doors/drawers or rail cover too quickly or forcefully may cause injury or damage to the appliance or surrounding equipment.
- Do not use combustible spray or place volatile or flammable substances in or near the appliance. They might catch fire.
- Keep the area around the appliance clean. Dirt, dust, or insects in the appliance could cause harm to individuals or damage to the equipment.
- Do not throw anything onto the shelves or load any single shelf with more than 120 lb. (54.5 kg) of product. They might fall off and cause injury.
- Do not load any single drawer with more than 75 lb. (34 kg) of product. Depending on the weight of product in the drawers, secure the unit as necessary to prevent it from overturning. Do not open more than one drawer at a time.
- The appliance is designed only for temporary storage of food. Employ sanitary methods. Use for any other purposes (for example, storage of chemicals or medical supplies such as vaccine and serum) could cause deterioration of stored items.
- Do not block air inlets or outlets, otherwise cooling performance may be reduced.
- Do not tightly pack the cabinet. Allow some space between items to ensure good air flow. Also allow space between items and interior surfaces.
- Do not put warm or hot foods in the cabinet. Let them cool first, or they will raise the cabinet temperature and could deteriorate other foods in the cabinet or overload the appliance.
- Food storage and handling must comply with applicable codes and regulations.
- All foods should be wrapped in plastic film or stored in sealed containers. Otherwise foods may dry up, pass their smells onto other foods, cause frost to develop, result in poor appliance performance, or increase the likelihood of cross-contamination. Certain dressings and food ingredients, if not stored in sealed containers, may accelerate corrosion of the evaporator, resulting in failure.
- Do not store items near air outlets. Otherwise, items may freeze up and crack or break causing a risk of injury or contamination of other food.

⚠ WARNING, continued

Additional Warnings for SR Models

- The entire rail must always be covered by rail dividers and pans (1/6 size, up to 6" (15 cm) deep). Otherwise, the appliance will not cool properly.
- Use only 1/6 size pans up to 6" (15 cm) deep. Do not use damaged pans.
- Ingredients must be pre-chilled to 37°F (3°C) or less before placing in rail.
- Keep the rail cover closed when not actively preparing food.
- The rail is for keeping ingredients cool while preparing food. If not actively preparing food for a long period such as overnight, seal pans with plastic wrap in addition to closing the rail cover. Depending on conditions, the cabinet temperature setting may need to be adjusted to prevent items from freezing. Alternatively, seal ingredients and store them in a refrigerator or freezer.

NOTICE

- Protect the floor when moving the appliance to prevent damage to the floor.
- Keep ventilation openings, in the appliance enclosure or in the built-in structure, clear of obstruction. Do not place anything on top of the appliance in an undercounter installation. There must be at least 1.5" (4 cm) overhead clearance for proper ventilation. The factory-installed rear bumpers must be in place to ensure proper rear clearance. Blockage of airflow could negatively affect performance and damage the appliance.
- Do not allow the appliance to bear any outside weight.
- To prevent deformation or cracks, do not spray insecticide onto the plastic parts or let them come into contact with oil.
- To avoid damage to the gasket, use only the door/drawer handle when opening and closing.
- To avoid damage to the top seal, do not lift the appliance by the top panel or remove the top panel.

Additional Notice for SR Models

- Do not place anything on top of the rail hood or rail cover and do not lift the appliance by the rail hood or rail cover. The rail hood and rail cover are not designed to bear any outside weight.

I. Construction and Refrigeration Circuit Diagram

A. Construction

1. Solid Door Models

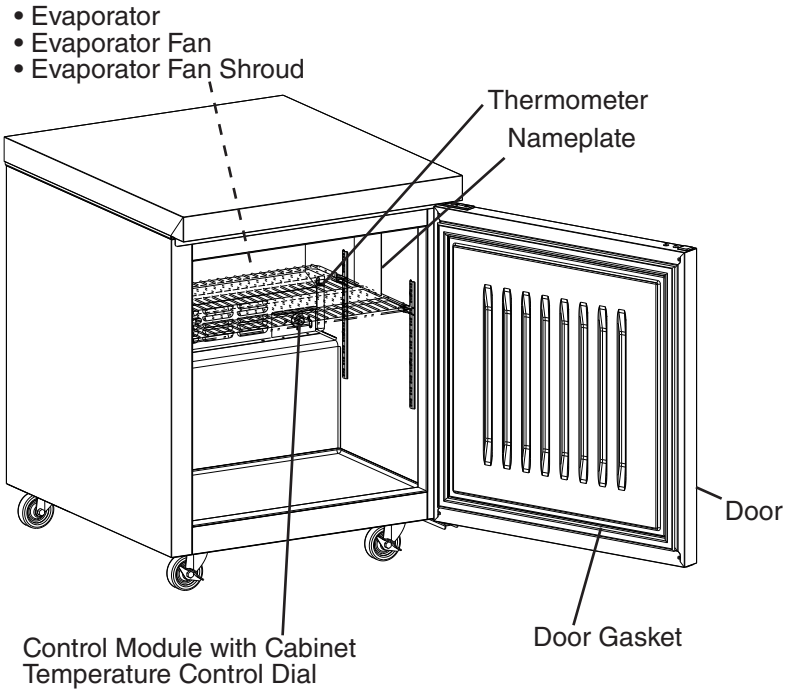

Model Shown: UR27B

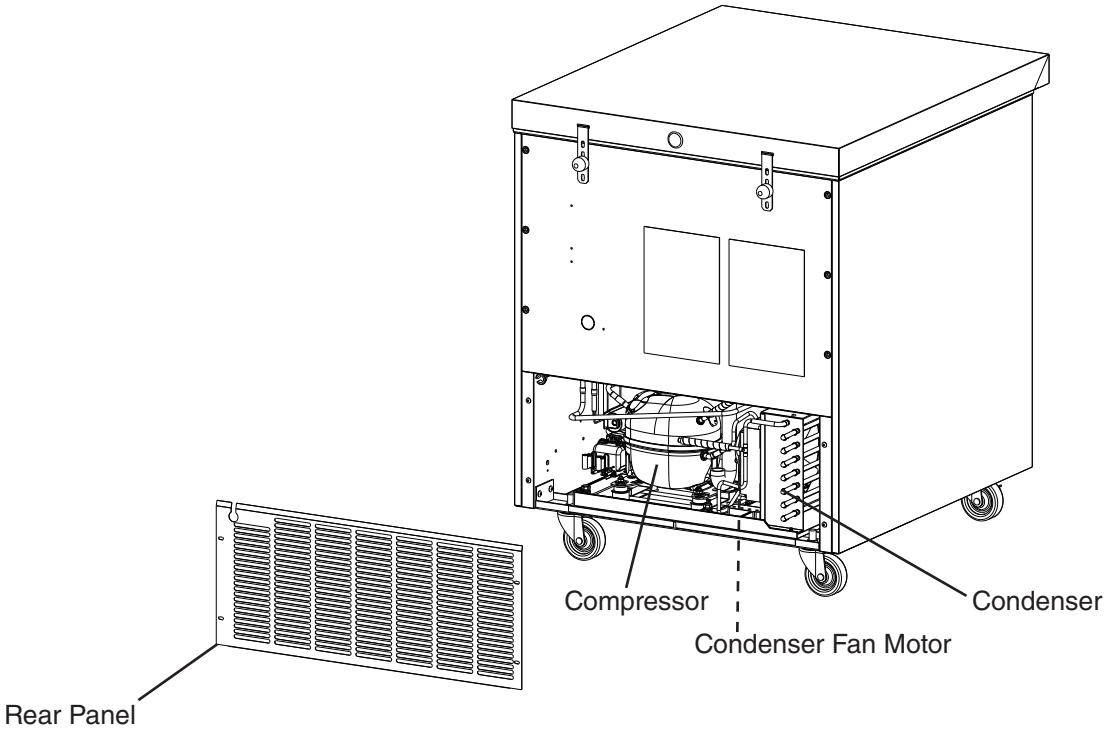

Model Shown: UR27B

2. Glass Door Models

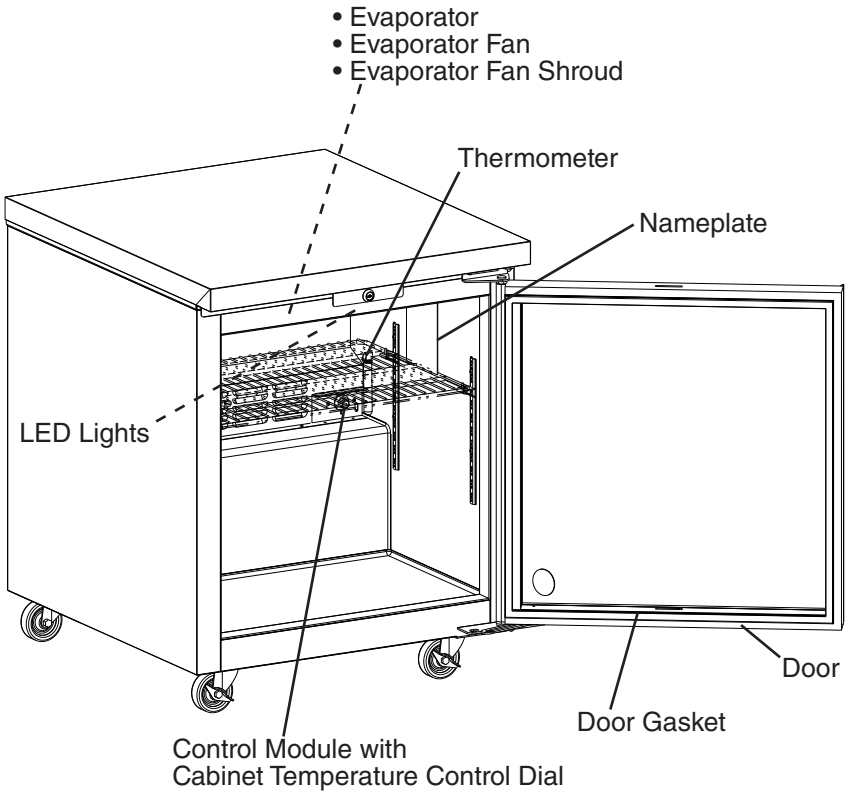

Model Shown: UR27B-GLP01

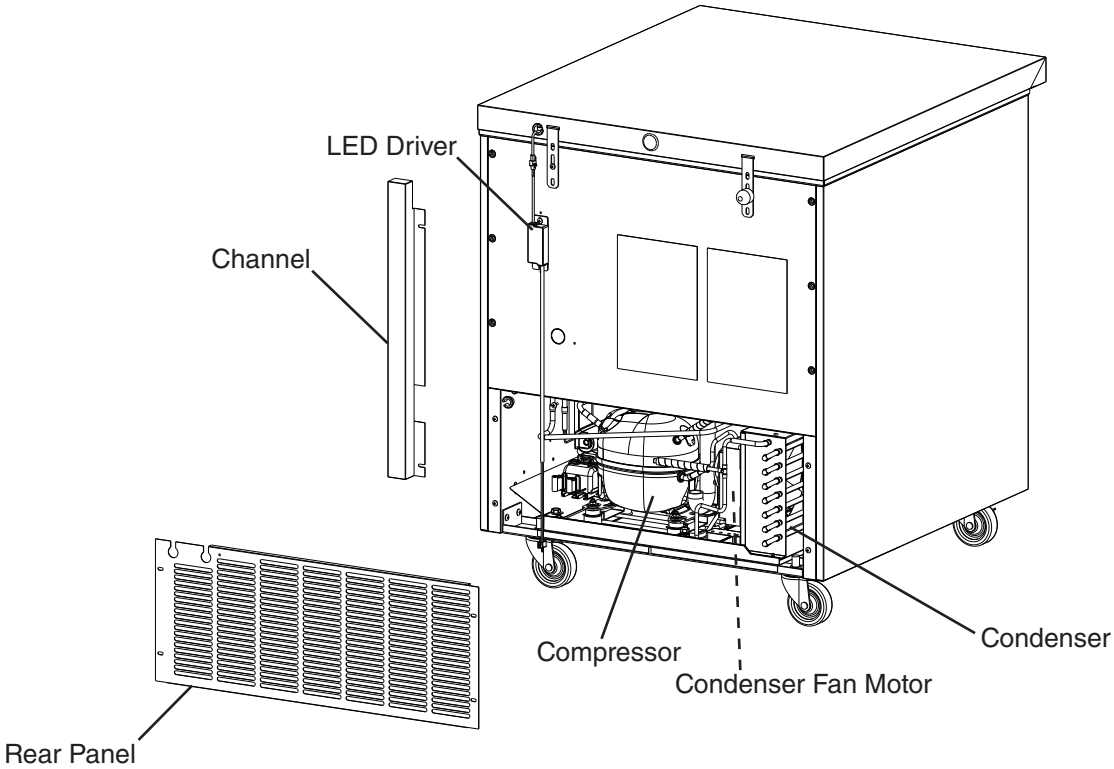

Model Shown: UR27B-GLP01

B. Refrigeration Circuit Diagram

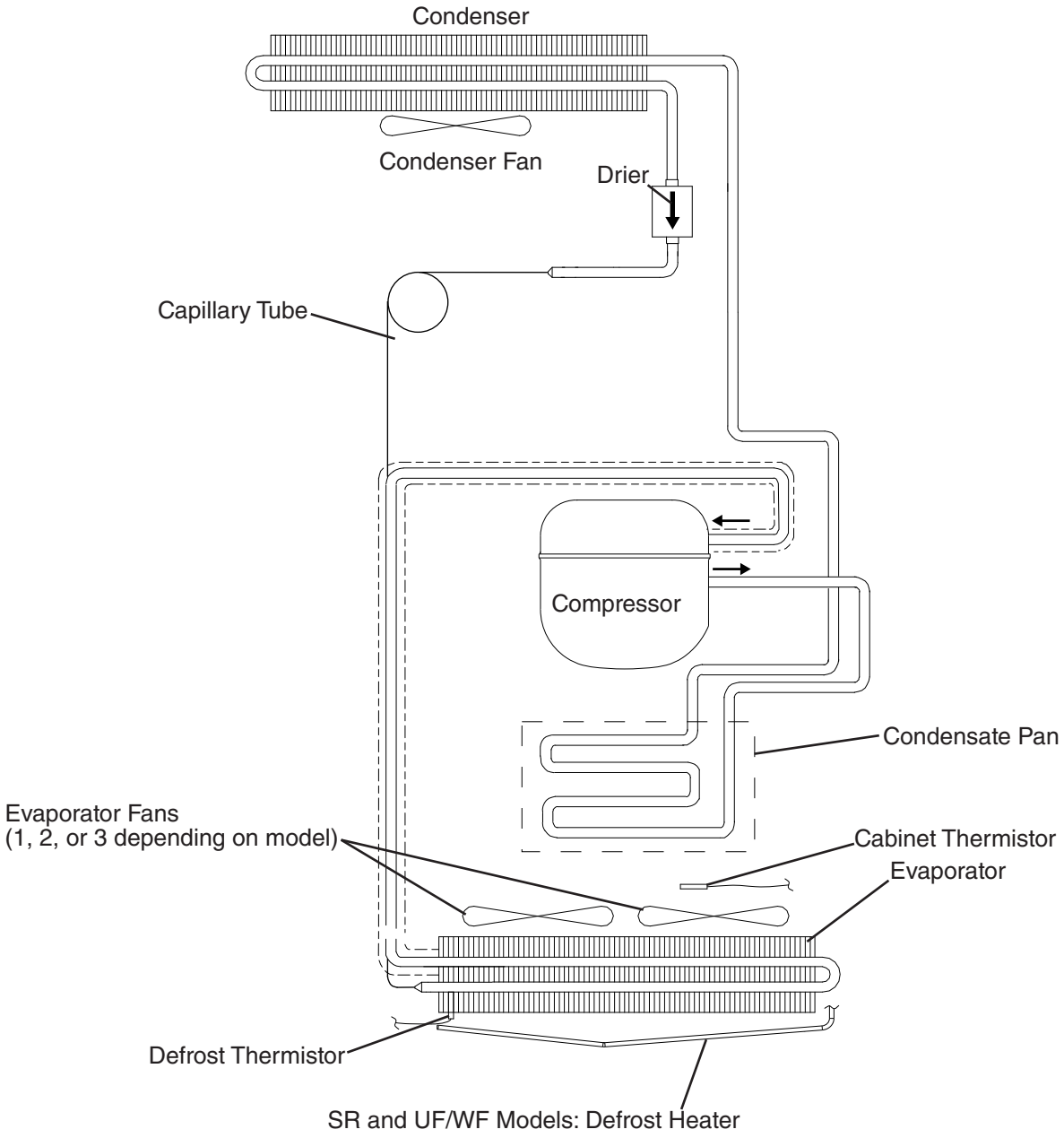

II. Sequence of Operation and Service Diagnosis

The steps in the sequence are as outlined below.

A. Sequence of Operation Flow Chart

1. UR/WR: Refrigerator

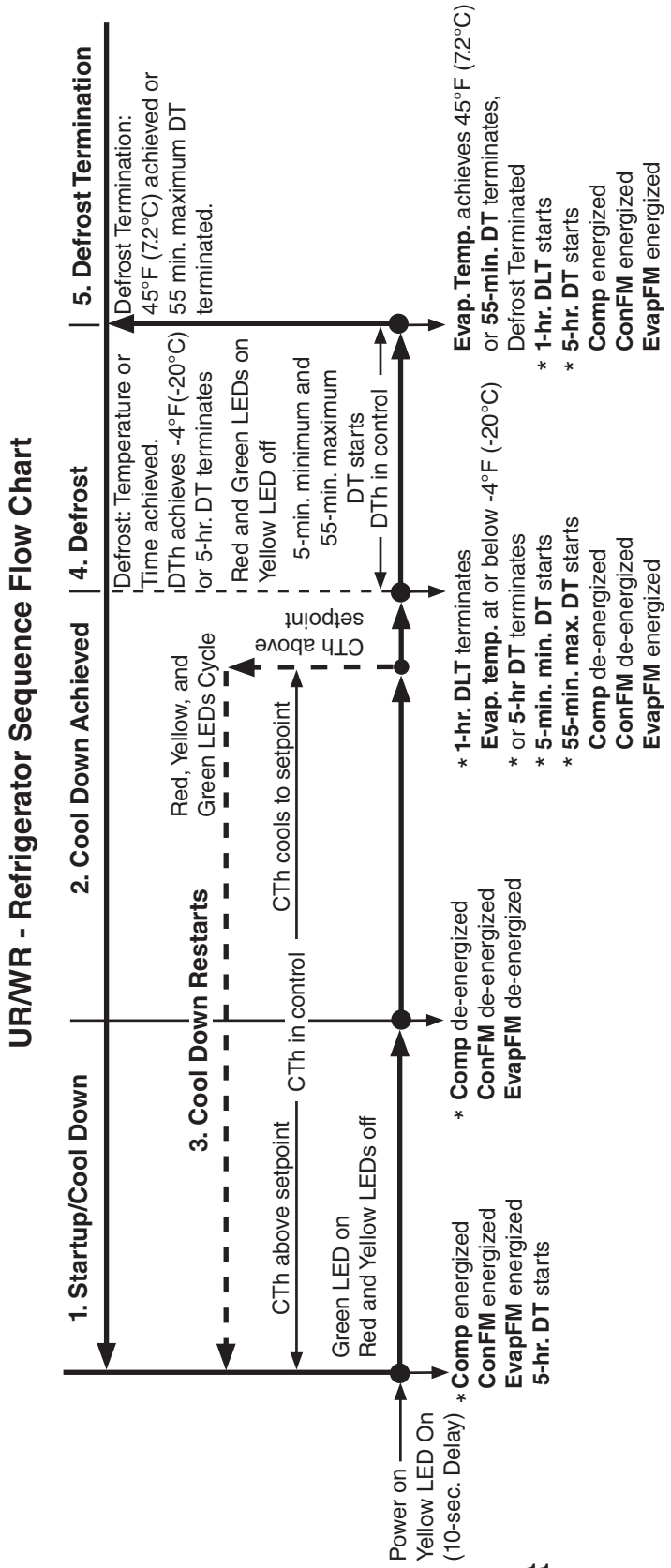

Note: *
a) 2-min. minimum Comp on timer starts when Comp energizes
b) 2-min. minimum Comp off timer starts when Comp de-energizes
c) 5-hr. cumulative compressor run-time defrost timer
d) 5-min. minimum defrost time
e) 55-min. maximum defrost time
f) 1-hr. minimum between defrost cycles (DLT)

Legend:
Comp-compressor
ConFM-condenser fan motor
CTh-cabinet thermistor
DLT-defrost lockout timer
DT-defrost timer (cumulative)
DTh-defrost thermistor
EvapFM-evaporator fan motor

2. SR: Refrigerator

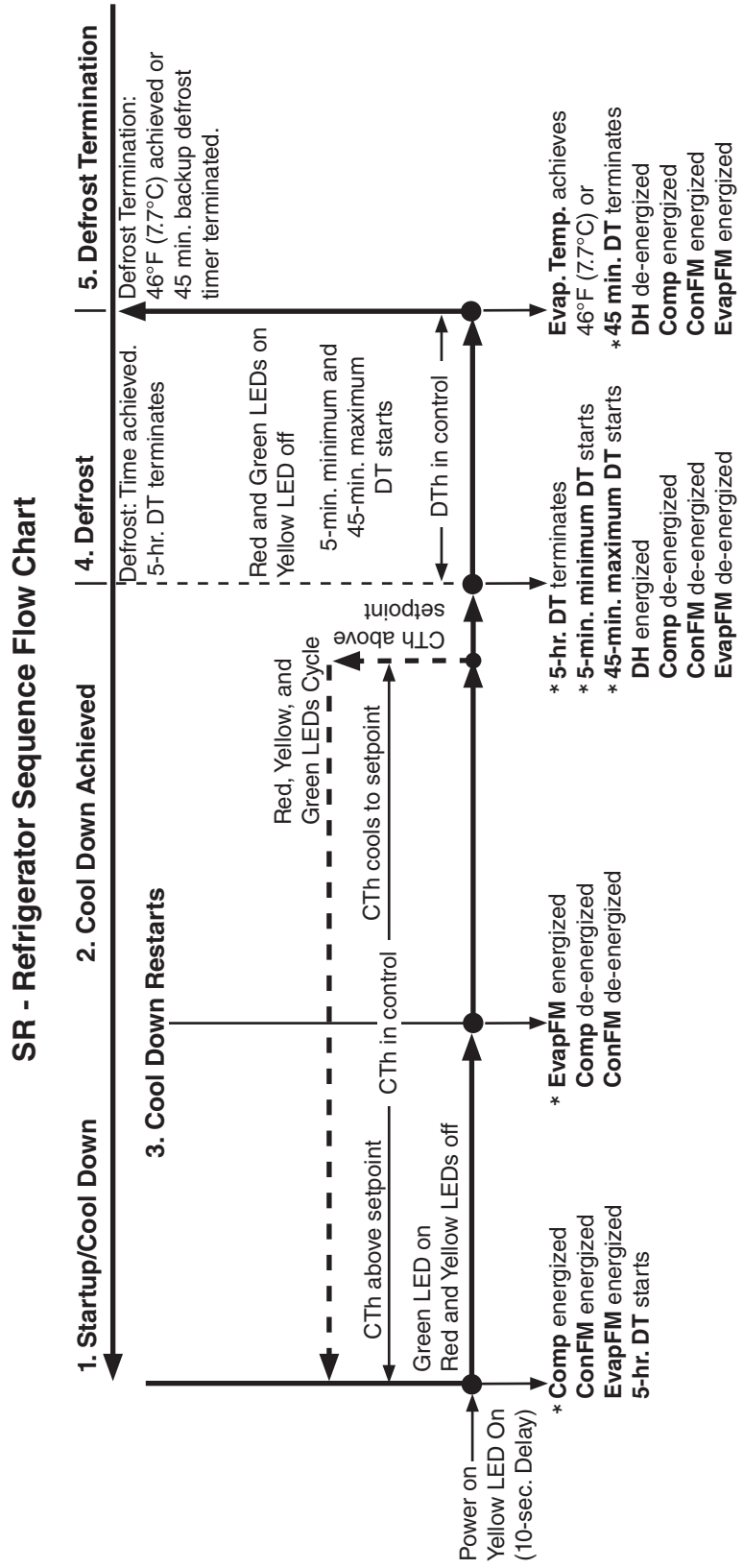

Note: *
a) 2-min. minimum Comp on timer starts when Comp energizes
b) 2-min. minimum Comp off timer starts when Comp de-energizes
c) 5-hr. cumulative compressor run-time defrost timer
d) 5-min. minimum defrost time
e) 45-min. maximum defrost time

Legend:
Comp-compressor
ConFM-condenser fan motor
CTh-cabinet thermistor
DH-defrost heater
DT-defrost timer
DTh-defrost thermistor
EvapFM-evaporator fan motor

UF/WF - Freezer Sequence Flow Chart

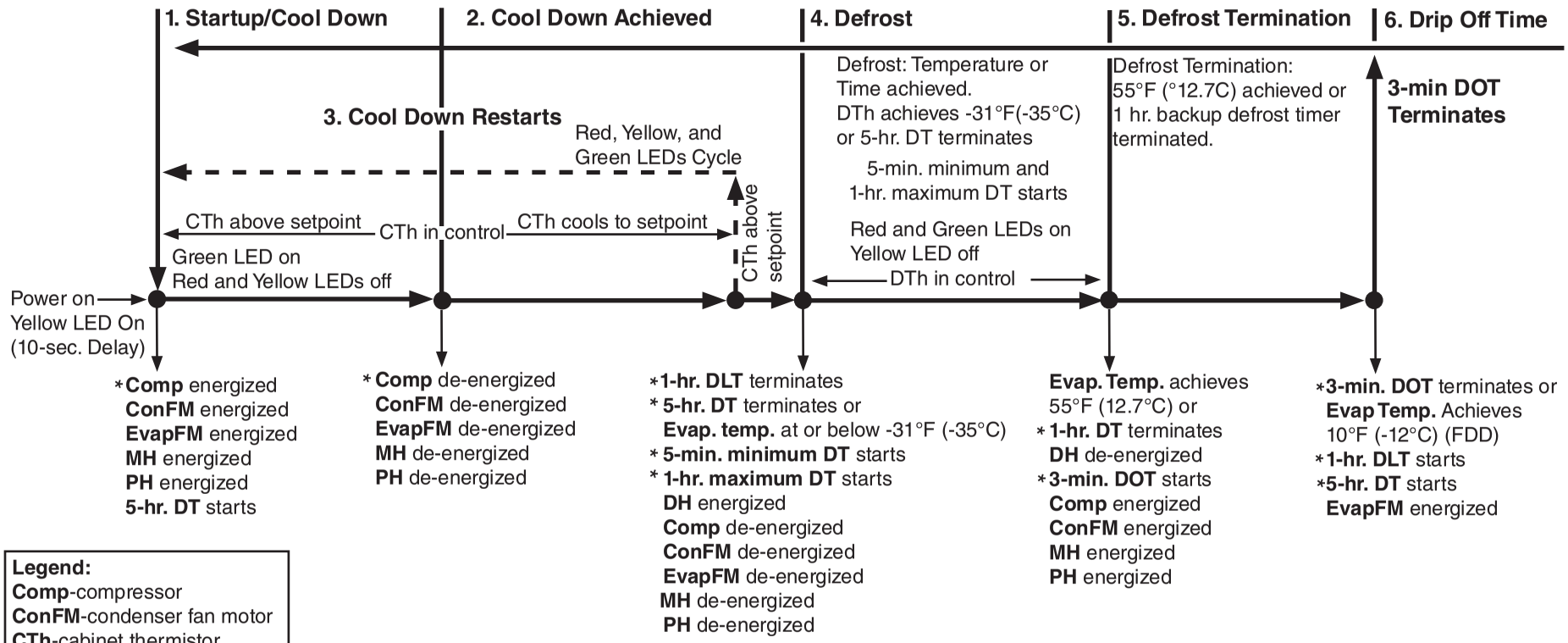

Legend:
Comp-compressor
ConFM-condenser fan motor
CTh-cabinet thermistor
DH-defrost heater
DLT-defrost lock-out timer
DT-defrost timer
DTh-defrost thermistor
EvapFM-evaporator fan motor
FDD-fan delay after defrost
MH-mullion heater
PH-perimeter heater

Note:*
a) 2-min. minimum Comp on timer starts when Comp energizes
b) 3-min. minimum Comp off timer starts when Comp de-energizes
c) 5-min. minimum defrost time
d) 1-hr. maximum defrost time
e) 3-min. Comp/ConFM delay timer starts when defrost termination temperature is met (drip off time (DOT))
f) 1-hr. defrost lock-out time after defrost terminated (DLT)
g) 3-min. EvapFM delay timer terminates or DTh reaches 10°F (-12°C) (FDD (fan delay after defrost), then evaporator fan motor energizes.

B. Service Diagnosis

⚠ DANGER

Risk of Fire or Explosion

Flammable Refrigerant Used

- Follow handling instructions carefully in compliance with U.S. government regulations.
- Do not use mechanical devices to defrost.
- Do not puncture refrigerant tubing. Risk of fire or explosion due to puncture of refrigerant tubing; follow handling instructions carefully.
- Component parts shall be replaced with like components.
- Servicing shall be done by factory authorized service personnel to minimize the risk of possible ignition due to incorrect parts or improper service.
- Consult instruction manual/service manual before attempting to install or service this product. All safety precautions must be followed.
- Dispose of properly in accordance with federal or local regulations.
- Do not place any potential ignition sources in or near the appliance.

Risque De Feu Ou D'Explosion

Le Frigorigène Est Inflammable

- Suivre attentivement les instructions de manipulation conformément à la réglementation gouvernementale.
- Ne pas utiliser d'appareils mécaniques pour dégivrer le réfrigérateur.
- Ne pas perforer la tubulure contenant le frigorigène. Risque de feu ou d'explosion si la tubulure contenant le frigorigène est perforée; suivre les instructions de manutention avec soin.
- Les pièces des composants doivent être remplacées par des pièces et accessoires équivalents.
- L'entretien doit être effectué par le personnel de service autorisé par le fabricant afin de minimiser les risques d'inflammation attribuables à l'installation d'une pièce inadéquate ou à la mauvaise exécution du service.
- Consulter le manuel du propriétaire/ guide de réparation avant de tenter une réparation. Toutes les mesures de sécurité doivent être respectées.
- Éliminer conformément aux règlements fédéraux ou locaux.
- Ne placez aucune source d'inflammation potentielle dans ou près de l'appareil.

⚠ WARNING

- The appliance should be diagnosed and repaired only by qualified service personnel to reduce the risk of death, electric shock, serious injury, or fire.
- Wear appropriate personal protective equipment (PPE) when servicing the appliance.
- Risk of electric shock. Use extreme caution and exercise safe electrical practices.
- Moving parts (e.g., fan blade) can crush and cut. Keep hands clear.
- Appliance is heavy. Use care when lifting or positioning. Work in pairs when needed to prevent injury or damage.
- Make sure all food zones are clean after the appliance is serviced.

1. Diagnostic Procedures

The diagnostic procedure is a sequence check that allows you to diagnose the electrical system and components. Before proceeding, check for correct installation and proper voltage per nameplate.

See the table for default cabinet temperature control dial settings.

Model	Default Cabinet Temperature Control Dial Setting	Approximate Default Temperature
UR/WR - Undercounter/Worktop	5	Refrigerator: 34°F (1°C)
SR - Prep Table	5	Refrigerator 34°F (1°C)
UF/WF - Undercounter/Worktop	7	Freezer: -5°F (-21°C)

The diagnostic procedure is a sequence check that allows you to diagnose the electrical system and components. Before proceeding, check for correct installation and proper voltage per nameplate.
Confirm that the appliance location meets factory requirements:

- This appliance is not intended for outdoor use. Normal operating ambient temperature:
  – All UR/WR and Solid Door UF/WF 45°F to 100°F (7°C to 38°C)
  – SR 45°F to 86°F (7°C to 30°C)
  – UF Glass Door 45°F to 80°F (7°C to 27°C).
- The appliance should not be located next to ovens, grills, or other high heat producing equipment. Check CM using the steps in "II.C. Control Module Check."

Note:
- When checking voltage (115VAC), always choose a neutral white (W) wire to establish a good neutral connection.
- Control module has high and low voltage protection. If off on either protection, no LED is visible and all components are off.
  High Voltage: 140VAC
  Low Voltage: 90VAC
- There is a 2 min. minimum compressor on time for all models and a 2-min. minimum compressor off time for UR/WR and SR and a 3-min. minimum compressor off time for UF/WF.
- The control module incorporates LEDs to identify sequence of operation. Reference the table below to assist in the diagnostic process.

CONTROL MODULE LED OPERATION			
LEDs			LED OPERATION
R	Y	G	
X	✓	X	5-SEC. DELAY
X	X	✓	SYSTEM ON
X	X	✸	CTh SATISFIED; SYSTEM OFF
X	✸	X	2-MIN. ON/OFF DELAY
✓	X	✓	DEFROST/DTh FAULT
○	○	○	SYSTEM OFF
X	✸	✸	CTh FAULT
LED OPERATION LEGEND			
○	CYCLING		
✸	FLASHING		
✓	ON		
X	OFF		

1) Unplug the appliance from the electrical outlet.

2) Remove the CM mounting bracket and place the CM in a place where the LEDs are visible.

3) Plug the appliance back into the electrical outlet. If appliance was in defrost when power supply was disconnected, defrost is terminated and normal cooling cycle begins.

4) **Startup/Cool Down–** All 3 LEDs flash on then off, then a solid yellow LED turns on for 10 sec., yellow LED turns off and solid green LED turns on (normal cooling cycle). CTh Temperature above setpoint, Comp, ConFM, EvapFM, PH (UF/WF only), and MH (UF/WF only) energize. 2-min. Comp on timer and 5-hr. DT starts.

   a) **CTh Diagnosis**: If CTh fails, green and yellow LEDs flash on the CM. Confirm CTh is properly connected to CM. Check Ohm reading of CTh. See "II.D. Thermistor Check." Replace as needed.

   b) **CM Diagnosis**: Confirm green LED is solid. If not, confirm CTh is above setpoint. Next, check for 115VAC between CM Live In black (BK) wire and a neutral white (W) wire. If 115VAC is not present, check power cord connections and breaker/fuse. Confirm wiring connections are secure for both CM Live In black (BK) and a neutral white (W) wire. If 115VAC is present, CTh is above setpoint, and CM green LED is not on, replace CM.

   c) **Comp/ConFM Diagnosis**: Check that Comp and ConFM energize. Next, check for 115VAC at CM Comp violet (V) wire to a neutral white (W) wire. If 115VAC is not present at CM Comp violet (V) to a neutral white (W) wire, check CTh status. See "II.D. Thermistor Check." If CTh ohm reading is in proper range, replace CM. Comp: If 115VAC is present, check Comp external overload, start or run cap (if applicable), PTC relay or start relay, and Comp motor windings. Replace as needed. ConFM: If 115VAC is present, check fan blade for binding, then check ConFM motor windings. If Comp, ConFM, and EvapFM are energized and the cabinet does not cool down, check for a restriction in the refrigeration circuit, low refrigerant charge, or inefficient Comp.

   d) **EvapFM Diagnosis**: Check that EvapFM(s) energize. If not, check for 115VAC at CM Aux 1 black-smooth (BK-SM) wire to neutral white (W) wire. If 115VAC is not present, replace CM. If 115VAC is present, check fan blades for binding, then check EvapFM motor windings.

   e) **PH and MH Diagnosis (UF/WF only)**: PH and MH follow Comp operation. When Comp is energized, PH and MH are energized. If 115VAC is present, check amp draw of PH and MH. If an amp reading is not present, check the continuity of PH and MH. If defective, replace PH or MH.

   f) **Glass Door Cabinet LEDs Diagnosis**: LED(s) are activated by CLS. If CLS is engaged and LED(s) fail to turn on, check for 115VAC at both CLS (Y) wires to a neutral white (W) wire. If 115VAC is present on one end and not the other, check CLS continuity. If open replace CLS. If CLS is closed and 115VAC is present on both CLS (Y) wires to a neutral (W), check for 24VDC at DCD black (BK) wire to DCD red (R) wire. If 24VDC is not present, check continuity of DCD driver. If open, replace DCD driver. If 24VDC is present and LED(s) are not on, check wiring harness and wiring connections from DCD to LED(s). If connections are good and LED(s) are not on, replace CM.

5) **Cool Down Achieved**–CTh reaches setpoint temperature.
All Models: Comp and ConFM de-energize.
UR/WR and UF/WF: EvapFM de-energize.
SR: EvapFM continues.
Diagnosis: If temperature setpoint achieved and Comp, ConFM, and EvapFM does not de-energize (except SR), check CTh continuity. See "II.D. Thermistor Check."
If CTh is defective, replace. If CTh is good and either the Comp, ConFM, or EvapFM continue, replace CM. SR: If EvapFM de-energizes, check for 115VAC at CM Aux 1 black-smooth (BK-SM) wire to neutral white (W) wire. If 115VAC is not present, replace CM. If 115VAC is present, check fan blades for binding, then check EvapFM motor windings.

6) **Defrost–**Manual, temperature, and time-initiated defrost with temperature-terminated defrost. Defrost has a 5-min. minimum time and a 55-min. maximum time on UR/WR, a 1-hr. maximum time on UF/WF, and a 45-min. maximum time on SR.

1a) **Manual-Initiation (All)**: Unplug the appliance from the electrical outlet, then move the CTCD to the off position. Plug the appliance back in to the electrical outlet. The green, yellow, and red LED turn on. Rotate the CTCD clockwise to position 4 (green and red LED turn off, yellow LED remains on), move counter-clockwise to position 2 (yellow LED turns off and red LED turns on), move back clockwise again to position 8 (red LED remains on and green LED turns on). Defrost initiates.
Note: Once at the number position, confirm the appropriate LEDs turn off and on. If not, move the CTCD back and forth until the LED turns on. Once the LED is on, move to the next position.

1b) **Temperature Initiation**:

(1) **UR/WR**: DTh is at or below -4°F (-20°C), defrost starts. CM red and green LED turn on. If energized, Comp and ConFM de-energize. EvapFM continues.
(2) **SR**: No temperature initiation. Time only.
(3) **UF/WF**: DTh at or below -31°F (-35°C), defrost starts. CM red and green LED turn on. If energized, Comp, ConFM, EvapFM, PH, and MH de-energize. DH energizes. 5-min. minimum DT starts and 1-hr. maximum DT starts.

1c) **Time Initiation (All):**
5-hr. cumulative compressor run timer terminates, defrost starts.

(1) **UR/WR**: Comp and ConFM de-energize. EvapFM continues. 5-min. minimum DT starts and 55-min. maximum DT starts.
(2) **SR**: Comp, ConFM, and EvapFM de-energize. DH energizes. 5-min. minimum DT starts and 45-min. maximum DT starts.
(3) **UF/WF**: Comp, ConFM, EvapFM, PH, and MH de-energize. DH energizes. 5-min. minimum DT starts and 1-hr. maximum DT starts.

Note: There is a 1-hr. defrost lock-out after a defrost cycle terminates. This may be bypassed by initiating a manual defrost or unplugging and plugging back in to the electrical outlet.

2a) **Manually-Terminated**: Set the CTCD to the off position, then back to original setting or unplugging and plugging back in to the electrical outlet. Defrost terminated.

2b) **Temperature or Time Terminated:**

(1) **UR/WR**: 45°F (7.2°C) achieved or 55-min. backup DT terminates. If CTh calling for cooling, Comp and ConFM energize. EvapFM continues.

(2) **SR**: 46°F (7.7°C) achieved or 45-min. backup DT terminates. DH de-energizes. Comp, ConFM, and EvapFM energize.

(3) **UF/WF**: 55°F (12.7°C) achieved or 1-hr. backup DT terminates. DH de-energizes. 3-min. DOT starts. 3-min. DOT terminates. If CTh calling for cooling, Comp, ConFM, PH, and MH energize. Once evaporator temperature achieves 10°F (-12.2°C) or 3-min. EvapFM delay timer terminates, EvapFM energizes.

Defrost Diagnosis

1) **Manually Initiated**: Unplug the appliance from the electrical outlet, then move the CTCD to the off position. Plug the appliance back in to the electrical outlet. The green, yellow, and red LED turn on. Rotate the CTCD clockwise to position 4 (green and red LED turn off, yellow LED remains on), move counter-clockwise to position 2 (yellow LED turns off and red LED turns on), move back clockwise again to position 8 (red LED remains on and green LED turns on). Defrost initiates. Note: Once at the number position, confirm the appropriate LEDs turn off and on. If not, move the CTCD back and forth until the LED turns on. Once the LED is on, move to the next position. After several attempts and the LEDs do not turn on and off as listed above, replace the CM. If defrost does not initiate after all the LEDs properly turn on and off, replace the CM. Once initiated, see component diagnosis below in "3) Time Initiated."

2) **Temperature Initiated**:

a) **UR/WR**: Has 1-hr. DLT terminated? Has DTh cooled to -4°F (-20°C) or lower?

b) **SR**: Has DTh cooled to -4°F (-20°C) or lower?

c) **UF/WF**: Has 1-hr. DLT terminated? Has DTh cooled to -31°F (-35°C) or lower?

(1) **DTh Diagnosis:** If DTh has cooled to proper temperature, confirm DTh status. See "II.D. Thermistor Check."

(2) **CM Diagnosis**: Check that CM red and green LEDs turn on. If not, and DTh ohm reading is in proper range, replace CM.

3) **Time Initiated**: 5-hr. cumulative compressor run timer terminates.

(1) **CM Diagnosis:** Confirm green and yellow LEDs turn on. If not, After attempting CTCD sequence several times and defrost still not initiated, wait 1 to 2 min. and repeat process. If defrost cycle still not activated, replace CM as needed.

(2) **Comp and ConFM Diagnosis**: Confirm Comp and ConFM de-energize. If not, check for 115VAC at CM Comp violet (V) wire to a neutral white (W) wire. If 115VAC is present, Check DTh continuity. See "II.D. Thermistor Check." Replace as needed. If DTh confirmed, replace CM.

(3) **EvapFM Diagnosis**

UR/WR: EvapFM continues. If not, check for 115VAC at CM AUX 1 black-smooth (BK-SM) wire to a neutral white (W). If 115VAC is not present, replace CM.

SR and UF/WF: Confirm EvapFM de-energizes. If not, check for 115VAC at CM AUX 1 black-smooth (BK-SM) to a neutral white (W). If 115VAC is present, confirm Comp and ConFM de-energized. Next, check DTh continuity. See "II.D. Thermistor Check." Replace as needed. If DTh confirmed, replace CM.

(4) **DH Diagnosis (SR and UF/WF)**: Confirm DH energizes. Check for 115VAC at CM AUX 2 black (BK) wire to a neutral white (W). If 115VAC is present, confirm Comp, ConFM, and EvapFM de-energized. Next, check DTh continuity. See "II.D. Thermistor Check." Replace as needed. If DTh confirmed, replace CM.

2) ***Defrost Termination***

Manually Terminated Defrost: Set the CTCD to the off position, then back to original setting or unplugging and plugging back in to the electrical outlet. Defrost terminated. If not, replace CM.

Temperature/Time Terminated Defrost

a) **UR/WR:** DTh warms to 45°F (7.2°C). Confirm continuity of DTh. See "II.D. Thermistor Check." Replace as needed. If DTh confirmed, replace CM. Once defrost termination achieved, EvapFM continues. Comp and ConFM energize. If not, see "4) Startup/Cool down" above.

b) **SR**: DTh warms to 46°F (7.7°C). DH de-energizes. Confirm continuity of DTh. See "II.D. Thermistor Check." Replace as needed. If DTh is good and DH continues after DTh achieves 46°F (7.7°C), replace CM. Comp, ConFM, and EvapFM energize. If not, see "4) Startup/Cool down" above.

c) **UF/WF**: DTh warms to 55°F (12.7°C) DH de-energizes. Confirm continuity of DTh. See "II.D. Thermistor Check." Replace as needed. If DTh is good and DH continues after DTh achieves 55°F (12.7°C), replace CM. 3-min. DOT starts. 3-min. DOT terminates. If CTh calling for cooling, Comp, ConFM, PH, and MH energize. Once evaporator temperature achieves 10°F (-12.2°C) or 3-min. EvapFM delay timer terminates, EvapFM energizes. If not, see "4) Startup/Cool down" above.

Legend: **Comp**–compressor; **ConFM**–condenser fan motor; **CLS**–cabinet light switch; **CM**–control module; **CTCD**–cabinet temperature control dial; **CTh**–cabinet thermistor; **DH**–defrost heater; **DLT**–defrost lock-out timer; **DST**–defrost safety thermostat; **DT**–defrost timer; **DTh**–defrost thermistor; **EvapFM**–evaporator fan motor; **HPS**–high-pressure switch; **MH**–mullion heater; **PH**–perimeter heater

C. Control Module Check

1. Control Module

Before replacing a CM that does not show a visible defect and that you suspect is bad, conduct the following check procedure. This procedure will help you verify your diagnosis. Always choose a neutral white (W) wire to establish a good power supply and neutral connection to CM. Check that 115VAC is present between CM Live In black (BK) wire and CM Neutral white (W) wire. Confirm defrost and cabinet thermistors are connected.

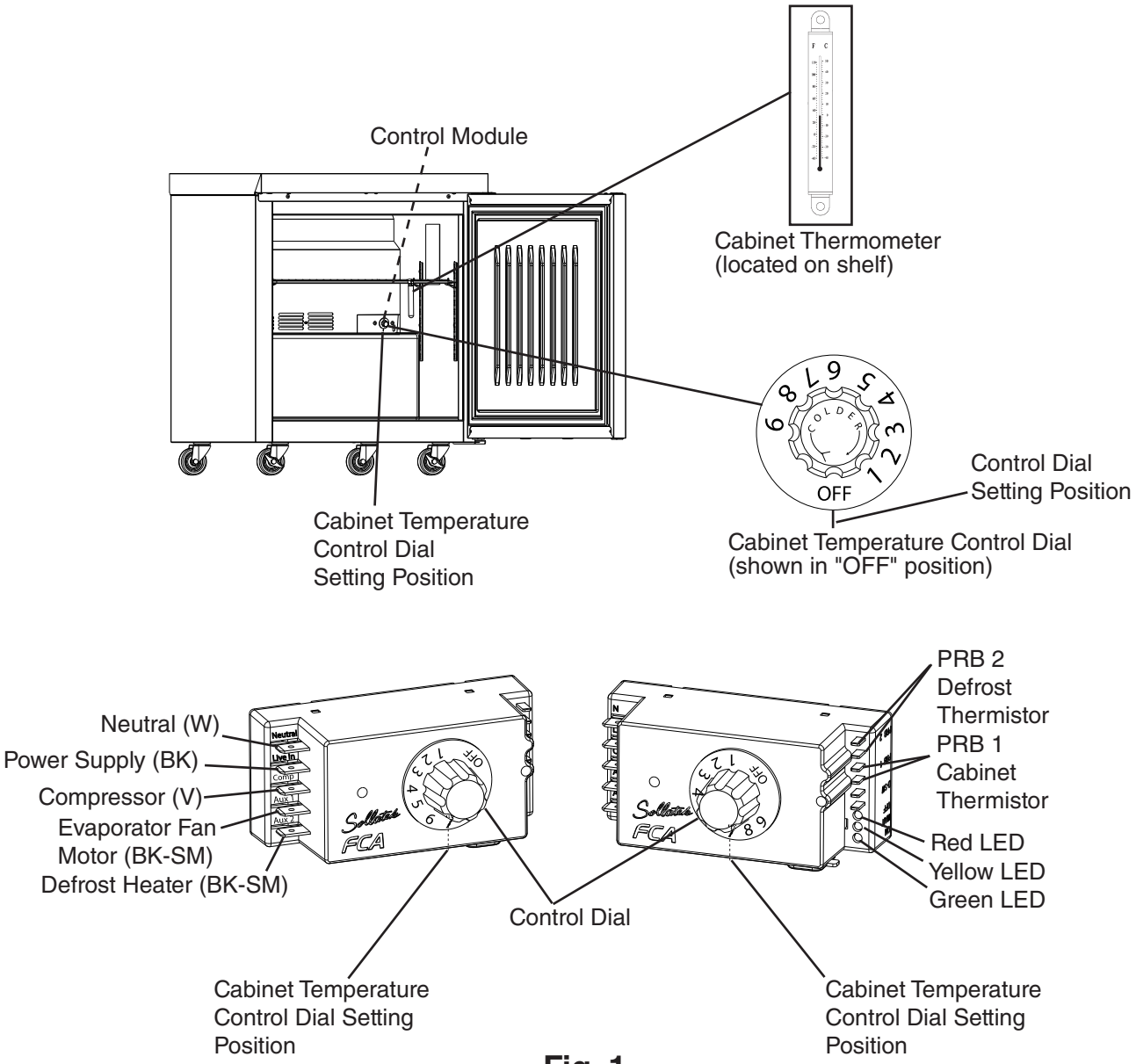

Fig. 1

1a. Control Module LED Operation:

The control module has 3 LEDs that illuminate based on the status of the thermistors. Red (R), Yellow (Y), and Green (G).

a) Warm Cabinet Thermistor - Power on: All 3 LEDs turn on for 2 sec. then turn off. Next, yellow (Y) LED turns on for 10 sec.

b) Warm Cabinet Thermistor - Compressor energizes: Yellow (Y) LED turns off, green (G) LED turns on (normal cooling cycle).

c) Cool Cabinet Thermistor - Cabinet temperature achieved. Compressor de-energizes: Green (G) LED flashes (normal off cycle).

d) 2-min. Compressor ON/OFF Startup Delay - Yellow (Y) LED on.

e) Defrost Initiated or Defrost Thermistor Failure: Red (R) and green (G) LEDs turn on.

f) Control Dial placed in the "OFF" position: Red (R), yellow (Y), and green (G) cycling.

g) Cabinet Thermistor Fault: Yellow (Y) and green (G) LED flashing. Note: on cabinet thermistor fault appliance cycles 5-min. on 5-min. off until cabinet thermistor connection restored or cabinet thermistor replaced.

CONTROL MODULE LED OPERATION			
LEDs			LED OPERATION
R	Y	G	
X	✓	X	10-SEC. DELAY
X	X	✓	SYSTEM ON
X	X	●	CTh SATISFIED; SYSTEM OFF
X	●	X	2-MIN. ON/OFF DELAY
✓	X	✓	DEFROST/DTh FAULT
○	○	○	SYSTEM OFF
X	●	●	CTh FAULT
LED OPERATION LEGEND			
○			CYCLING
●			FLASHING
✓			ON
X			OFF

2. Startup/Cool Down

At startup, CM displays a flash of the solid green, yellow, and red LEDs, then yellow LED turns on for 10 sec. Yellow LED turns off and a solid green LED turns on (normal cooling cycle). Unless 2-min. Comp delay timer is on. **CTh Diagnosis**: If green and yellow LEDs flashing (CTh fault code), check CTh for continuity and good connection to CM. See "II.D. Thermistor Check."

1) Check all wiring connections.

2) Be sure the power supply is connected to the electrical outlet.

3) Confirm the CTh is properly connected (no green and yellow LEDs flashing). A Solid yellow LED turns on for 10 sec. at startup. After 10 sec. the yellow LED turns off and is replaced by a solid green LED. During a 2-min. Comp delay, the yellow LED remains on. If the green and yellow LED starts flashing, check CTh continuity. Replace as needed.

4) Check that Comp, ConFM, EvapFM, PH and MH (UF/WF) energize. If not check CTh status. See "II.D. Thermistor Check." If CTh ohm reading is in proper range, **Comp, ConFM, PH (UF/WF) and MH (UF/WF)**; check for 115VAC at COMP violet (V) to a neutral white (W) wire. If 115VAC is not present, replace CM. If 115VAC is present and Comp energized and ConFM did not, check ConFM blades for binding and motor winding continuity.
If PH (UF/WF) or MH (UF/WF) do not energize, check continuity, replace as needed.
EvapFM; Check for 115VAC at AUX 1 black-smooth (BK-SM) to neutral white (W).
If 115VAC is not present, replace CM. If 115VAC is present, check EvapFM blades for binding and motor winding continuity.

3. Defrost initiation

5) **Manual Defrost Check:** Unplug the appliance from the electrical outlet, then move the CTCD to the off position. Plug appliance back into the electrical outlet. The CM green, yellow, and red LED turn on. Rotate the CTCD clockwise to position 4 (green and red LED turn off, yellow LED remains on), move Counter-clockwise to position 2 (yellow LED turns off and red LED turns on), move back clockwise to position 8 (red LED remains on and green LED turns on). Defrost initiates. Note: Once the CTCD is on the number position, confirm the appropriate LED turns on. If not, move the CTCD back and forth until the LED turns on. Once on, move to the next position. After attempting CTCD sequence several times and defrost still not initiated, wait 1 to 2 min. and repeat process. If defrost cycle still not activated, replace CM as needed.

6) **UR/WR Defrost Check**: Confirm EvapFM remains energized.

7) **SR and UF/WF Defrost Check**: Confirm Comp, ConFM, EvapFM, PH (UF/WF), and MH (UF/WF) de-energizes. If not, for Comp and ConFM, check for 115VAC at COMP violet (V) wire to neutral white (W) wire and for EvapFM check for 115VAC at AUX 1 black/smooth (BK/SM) to neutral white (W) wire. If 115VAC is present, replace CM. Confirm DH energizes. If not, check for 115VAC at AUX 2 black (BK) wire to neutral white (W) wire. If 115VAC is not present, replace CM.

4. Defrost Termination

8) Check that all components restart after defrost termination.

   a) **UR/WR**: DTh warms to 45°F (7.2°C). Confirm continuity of DTh. See "II.D. Thermistor Check." Replace as needed. If DTh confirmed, replace CM.

   b) **SR**: DTh warms to 46°F (7.7°C). DH de-energizes. Confirm continuity of DTh. See "II.D. Thermistor Check." Replace as needed. If DTh is good and DH continues after DTh achieves 46°F (7.7°C), replace CM.

   c) **UF/WF:** DTh warms to 55°F (12.7°C). DH de-energizes. Confirm continuity of DTh. See "II.D. Thermistor Check." Replace as needed. If DTh is good and DH continues after DTh achieves 55°F (12.7°C), replace CM. 3-min. DOT starts. All components are de-energized during DOT. 3-min. DOT terminates, Comp and ConFM energize. If not, check for 115VAC at CM Neutral white (W) wire to CM Comp violet (V) wire. If 115VAC is not present, replace CM. Once Comp energizes, 3-min. EvapFM delay timer starts. EvapFM energizes when DT achieves 10°F (-12.2°C) or the EvapFM delay timer terminates. Whichever comes first. If EvapFM does not energize, check for 115VAC at CM Neutral white (W) wire to CM Aux 1 black-smooth (BK-SM) wire. If 115VAC is not present, replace CM.

Legend: **Comp**–compressor; **ConFM**–condenser fan motor; **CM**–control module; **CTCD**–cabinet temperature control dial; **CTh**–cabinet thermistor; **DH**–defrost heater; **DOT**–drip off time; **DTh**–defrost thermistor; **EvapFM**–evaporator fan motors, **MH**–mullion heater; **PH**–perimeter heater

D. Thermistor Check

The cabinet thermistor works in conjunction with cabinet temperature control dial (CTCD) to control cabinet temperature. The defrost thermistor is used for defrost initiation and termination on all models and evaporator fan motor restart on UF/WF.

- **UR/WR**: Defrost termination is 45°F (7.2°C).
- **SR**: Defrost termination is 46°F (7.7°C).
- **UF/WF**: Defrost initiation is below -31°F (-35°C).
  Defrost termination is 55°F (12.7°C).
- **UR/WR**: Evaporator fan motor is energized during defrost.
- **SR and UF/WF**: Evaporator fan motor de-energized during defrost.
  UF/WF Only; Evaporator fan motor is delayed until defrost thermistor achieves 10°F (-12.2°C) or 3-min. EvapFM delay timer terminates after defrost termination.

Thermistor resistance varies depending on temperature. The control module monitors the thermistors and cabinet temperature control dial (CTCD) to control system operation. No adjustment is required.

To check thermistor resistance, follow the steps below.

1) Unplug the appliance from the electrical outlet.
2) Remove the evaporator shroud and rear louver.
3) Disconnect the thermistor connector from the control module.
4) Remove the thermistor in question, then immerse the thermistor sensor portion in a glass containing ice and water for 2 to 3 min.
5) Check the resistance between the wires at the thermistor connector. Normal reading is within 268.0 kΩ (39°F (4°C)) to 313 kΩ (34°F (1°C)). If outside the normal reading, replace the thermistor.
6) Reconnect and replace the thermistor and thermistor connector in their correct positions. Note: After working with or around the defrost thermistor on an SR or UF/WF, make sure the defrost thermistor wire is not touching the defrost heater.
7) Replace the evaporator shroud and rear louver. Plug the appliance back in to the electrical outlet.

E. Diagnostic Table

Before consulting the diagnostic tables, check the following:

- Check the cabinet temperature control dial setting. See the table for default cabinet temperature control dial settings.

Model	Default Cabinet Temperature Control Dial Setting	Approximate Default Temperature
UR/WR - Undercounter and Worktop	5	Refrigerator: 34°F (1°C)
SR - Prep Table	5	Refrigerator 34°F (1°C)
UF/WF - Undercounter and Worktop	7	Freezer: -5°F (-21°C)

- Make sure the doors are not left open or opened too often and that they are sealing properly.
- On SR models, pans and rail dividers must be in place. Otherwise, the rail will not cool properly.
- Make sure product is not blocking airflow and that the cabinet is not overloaded with warm or hot product. Product should be allowed to cool before putting in the appliance. On SR models, only load ingredients that have been pre-chilled to 37°F (3°C) or less.
- Check for correct installation and proper voltage per appliance nameplate.
  This appliance is not intended for outdoor use. Normal operating ambient temperature:
  – All UR/WR and Solid Door UF/WF 45°F to 100°F (7°C to 38°C)
  – SR 45°F to 86°F (7°C to 30°C)
  – UF Glass Door 45°F to 80°F (7°C to 27°C)
- The appliance should not be located next to ovens, grills, or other high heat producing equipment. A minimum of 1.5" (38 mm) overhead clearance is required for proper ventilation.

1. Appliance Not Cooling

Appliance Not Cooling - Possible Cause	
1. Power Supply	a) Unplugged, blown fuse, or tripped or defective circuit breaker.
	b) Loose connection.
	c) Not within specifications.
2. Power Supply Cord and Plug	a) Loose connection.
	b) Defective.
3. Wiring	a) Loose connection or disconnected.
	b) Defective.
4. Cabinet Thermistor	a) Loose, disconnected, or defective.
5. Control Module See "II.C. Control Module Check" and "II.D. Thermistor Check"	a) Control module LEDs flashing CTh fault code (green (G) and yellow (Y) flashing).
	b) Defective.
6. Evaporator Fan Motor	a) Fan blade binding.
	b) Defective.
7. Condenser Fan Motor	a) Fan blade binding.
	b) Defective.
8. Compressor External Protector	a) Dirty condenser.
	b) Condenser fan motor not operating.
	c) Start or PTC relay defective.
	d) Start or Run capacitor (if applicable) defective.
	e) Defective.
	f) Low charge.
9. Compressor	a) Defective.
10. Condenser	a) Dirty.
11. Evaporator	a) Dirty or frozen up.
12. Refrigerant/Refrigerant Lines	a) Low.
	b) Refrigerant lines or components restricted.

2. Evaporator is Frozen Up

Evaporator is Frozen Up - Possible Cause	
1. Evaporator	a) Dirty.
2. Evaporator Fan Motor	a) Fan blade binding.
	b) Defective.
3. Cabinet Thermistor See "II.D. Thermistor Check"	a) Defective.
4. Control Module See "II.C. Control Module Check"	a) Defective.
5. Defrost Thermistor See "II.D. Thermistor Check"	a) Defective.
6. Defrost Heater (if applicable)	a) Defective.
7. Defrost Safety Thermostat Open (if applicable)	a) Defective. Open. Cut-out: 120°F±5°F (49°C±3°C), Cut-in: 70°F±5°F (21°C±3°C).
6. Refrigerant Charge	a) Low.

3. Defrost

UR/WR Defrost - Possible Cause	
1. Control Module (fails to initiate) See "II.C. Control Module Check"	a) Defective-Cumulative 5-hr. defrost timer fails.
	b) Defective-1-hr. defrost lock-out timer fails.
2. Control Module (fails to terminate) See "II.C. Control Module Check"	a) Defrost thermistor connection loose.
	b) Defective.
3. Defrost Thermistor (Confirm DTh status. See "II.D. Thermistor Check")	a) Defective.
SR and UF/WF Defrost - Possible Cause	
1. Control Module (fails to initiate) See "II.C. Control Module Check"	a) Defective (Cumulative 5-hr. defrost timer fails).
2. Defrost Safety Thermostat	a) Defective. Open. Cut-out: 120°F±5°F (49°C±3°C), Cut-in: 70°F±5°F (21°C±3°C).
3. Defrost Heater	a) Defrost safety thermostat open.
	b) Defective.
4. Defrost Thermistor (Confirm DTh status. See "II.D. Thermistor Check")	a) Defective.
5. Control Module (fails to terminate) See "II.C. Control Module Check"	a) Defrost thermistor connection loose.

III. Controls and Adjustments

A. Temperature Settings

1. Temperature Reading

A thermometer with both °F and °C scales is mounted in the cabinet. See Fig. 1.

2. Cabinet Temperature

The appliance features a cabinet temperature control dial (CTCD). The warmest setting is 1 and the coldest setting is 9. See the table for default cabinet temperature control dial settings.

Model	Default Cabinet Temperature Control Dial Setting	Approximate Default Temperature
UR/WR - Undercounter/Worktop	5	Refrigerator: 34°F (1°C)
SR - Prep Table	5	Refrigerator 34°F (1°C)
UF/WF - Undercounter/Worktop	7	Freezer: -5°F (-21°C)

Fig. 1

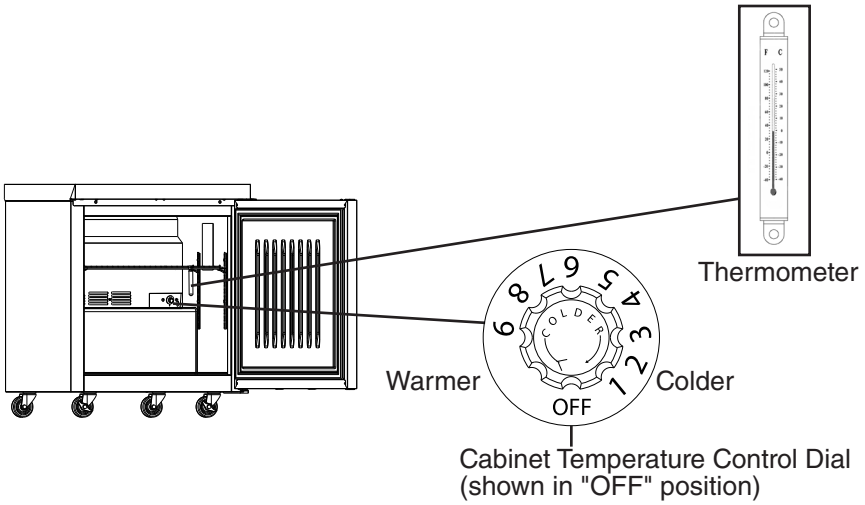

B. Defrost

There are 2 types of defrost: Off Cycle Defrost (with evaporator fan motor) and Heated Defrost (without evaporator fan motor).

Manual Initiation (All Models): Unplug the appliance from the electrical outlet,then move the cabinet temperature control dial to the off position. Plug the appliance back into the electrical outlet. The Green, Yellow, and Red LED turn on briefly. Rotate the cabinet temperature control dial clockwise to position 4 (Yellow LED), counter-clockwise to position 2 (Red LED), clockwise to position 8 (Green and Red LED). Defrost initiates. See Fig. 2. Note: Once on the number position, confirm the appropriate LED turns on. If not, move the cabinet temperature control dial back and forth until the LED turns on. Once on, move to the next position. Defrost initiated.

Cabinet Temperature Control Dial

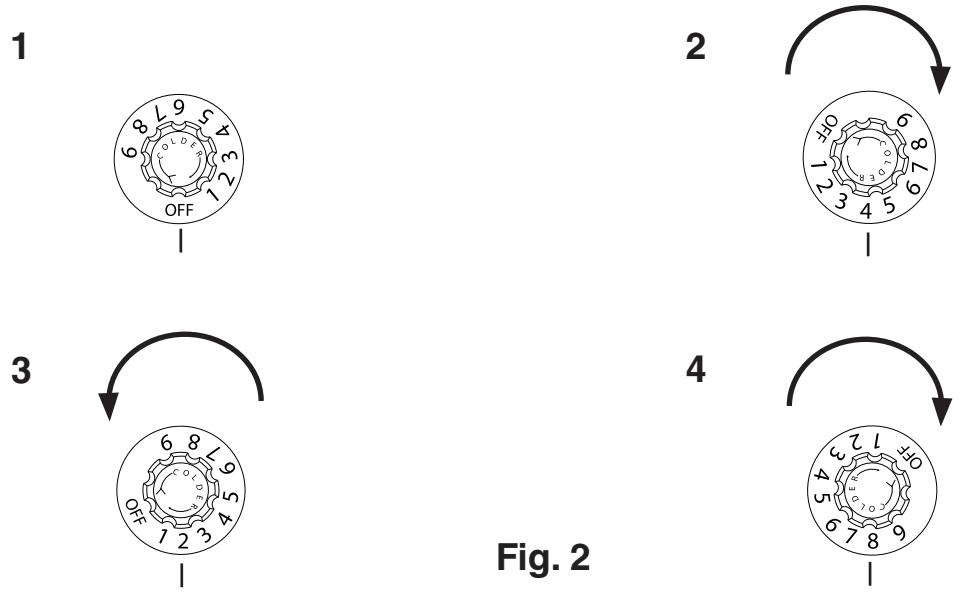

Fig. 2

Temperature Initiation: Evaporator temperature (defrost thermistor) achieves:

a) **UR/WR**: -4°F (-20°C) or lower.

b) **SR**: No temperature initiation. Time only.

c) **UF/WF**: -31°F (-35°C) or lower.

Defrost initiates. 1-hr. defrost lockout between defrost on UR/WR and UF/WF.

Time Initiation: 5-hr. cumulative compressor run timer terminates, defrost initiates.

a) **UR/WR**: 5-min. minimum and 55-min. maximum. Evaporator fan motor continues.

b) **SR**: 5-min. minimum and 45-min. maximum. Evaporator fan motor de-energizes

c) **UF/WF**: 1-hr. maximum defrost timers starts. Evaporator fan motor de-energizes.

Manual Termination: Turn the CTCD to the "OFF" position, then back to original setting or unplug the appliance from the electrical outlet, then plug the appliance back into the electrical outlet. Defrost terminated.

Temperature/Time Termination: Evaporator termination temperature (defrost thermistor) achieved or backup maximum defrost timer terminates.

UR/WR: DTh warms to 45°F (7.2°C) or 55-min. max. defrost timer terminates.

SR: DTh warms to 46°F (7.7°C) or 45-min. max. defrost timer terminates.

UF/WF: DTh warms to 55°F (12.7°C) or 1-hr. max. defrost timer terminates.

C. Safety Devices

1. Compressor External Protector (All Models)

If combined temperature/amperage value is above the limit specified by the compressor manufacturer, the compressor external protector operates independently to turn off the compressor. The compressor external protector de-energizes the compressor until the temperature/amperage value returns to an acceptable level.

D. Perimeter and Mullion Heaters (UF/WF only)

UF/WF are equipped with perimeter and mullion heaters. If condensation occurs, check continuity of heaters.

IV. Refrigeration Circuit and Component Service Information

⚠ DANGER

Risk of Fire or Explosion Flammable Refrigerant Used

- Follow handling instructions carefully in compliance with U.S. government regulations.
- Do not use mechanical devices to defrost.
- Do not puncture refrigerant tubing. Risk of fire or explosion due to puncture of refrigerant tubing; follow handling instructions carefully.
- Component parts shall be replaced with like components.
- Servicing shall be done by factory authorized service personnel to minimize the risk of possible ignition due to incorrect parts or improper service.
- Consult instruction manual/service manual before attempting to install or service this product.
- Dispose of properly in accordance with federal or local regulations.
- Do not place any potential ignition sources in or near the appliance.

Risque De Feu Ou D'Explosion Le Frigorigène Est Inflammable

- Suivre attentivement les instructions de manipulation conformément à la réglementation gouvernementale.
- Ne pas utiliser d'appareils mécaniques pour dégivrer le réfrigérateur.
- Ne pas perforer la tubulure contenant le frigorigène. Risque de feu ou d'explosion si la tubulure contenant le frigorigène est perforée; suivre les instructions de manutention avec soin.
- Les pièces des composants doivent être remplacées par des pièces et accessoires équivalents.
- L'entretien doit être effectué par le personnel de service autorisé par le fabricant afin de minimiser les risques d'inflammation attribuables à l'installation d'une pièce inadéquate ou à la mauvaise exécution du service.
- Consulter le manuel du propriétaire/guide de réparation avant de tenter une réparation. Toutes les mesures de sécurité doivent être respectées.
- Éliminer conformément aux règlements fédéraux ou locaux.
- Ne placez aucune source d'inflammation potentielle dans ou près de l'appareil.

⚠ WARNING

- Wear appropriate personal protective equipment (PPE) when servicing the appliance.
- Technician must utilize a combustible gas leak detector at all times.
- Notify everyone in the immediate area that you are working with flammable refrigerant.
- Do not work on appliance in a confined space. Confirm area is well ventilated.
- Identify and eliminate all possible ignition points in a 10 ft. (3 m) area around service area.
- Do not use mechanical devices to defrost.
- Use non-sparking tools.
- Class B dry chemical fire extinguisher or equivalent must be available.
- Do not pressurize system above 200 PSIG during leak check procedure or prior to evacuating refrigeration system.
- This appliance should be diagnosed and repaired only by qualified service personnel to reduce the risk of death, electric shock, serious injury, or fire.
- To reduce the risk of electric shock, do not touch the plug with damp hands.
- Unplug the appliance from the electrical outlet before servicing.
- Make sure all food zones in the appliance are clean after the appliance is serviced.

A. Refrigeration Circuit Service Information

⚠ WARNING

- Repairs requiring the refrigeration circuit to be opened must be performed by properly trained and EPA-certified service personnel.
- Use an electronic leak detector or soap bubbles to check for leaks. Add a trace of refrigerant to the system (if using an electronic leak detector), and then raise the pressure using nitrogen gas (140 PSIG). Do not use R-290 as a mixture with pressurized air for leak testing.

NOTICE

- Always recover the refrigerant and store it in an approved container. Do not discharge the refrigerant into the atmosphere.
- Do not leave the system open for longer than 15 minutes when replacing or servicing parts. The Polyol Ester (POE) oils used in R-290 appliances can absorb moisture quickly. Therefore it is important to prevent moisture from entering the system when replacing or servicing parts.
- Always install a new drier every time the sealed refrigeration system is opened. Do not replace the drier until after all other repair or replacement has been made. Install the new drier with the arrow on the drier in the direction of the refrigerant flow.
- When brazing, protect the drier by using a wet cloth to prevent the drier from overheating. Do not allow the drier to exceed 250°F (121°C).

Refrigerant leaks must be repaired as soon as they are discovered. If not, refrigerant charge should be recovered from the system until the leak can be repaired.
When repairing a leak:

- Repair the leak properly – Remove the refrigerant, examine the leak source, determine the reason for the leak, and carry out the proper course of action.
- Before repairing the leak, ensure that the refrigerant has been recovered and the system purged with nitrogen when brazing.
- Be sure to remove piercing valves attached to the system after repairs are made.

1. Refrigerant Recovery

Using proper refrigerant practices, place piercing valves toward the end (crimped area) of the high and low-side process tubes, then recover the refrigerant into an approved container or device.

2. Brazing

⚠ DANGER

Risk of Fire or Explosion Flammable Refrigerant Used

- Servicing shall be done by factory authorized service personnel to minimize the risk of possible ignition due to incorrect parts or improper service.

Risque De Feu Ou D'Explosion Le Frigorigène Est Inflammable

- L'entretien doit être effectué par le personnel de service autorisé par le fabricant afin de minimiser les risques d'inflammation attribuables à l'installation d'une pièce inadéquate ou à la mauvaise exécution du service.

⚠ WARNING

- Wear appropriate personal protective equipment (PPE) when servicing the appliance.
- You must have a combustible gas leak detector in the immediate work area at all times.
- You must have a Class B chemical fire extinguisher available at all times.
- Notify all persons in the immediate area that you are working with a flammable refrigerant.
- Do not use silver alloy or copper alloy containing arsenic.
- Be sure the area is clear of refrigerant vapor before brazing.

1) Braze/repair/replace damaged component or fitting.
2) Purge with nitrogen gas for 2 min. Then braze all fittings while purging with nitrogen gas flowing at a pressure of 3 to 5 PSIG.

NOTICE

- Always install a new drier every time the sealed refrigeration system is opened.
- Do not replace the drier until after all other repair or replacement has been made. Install the new drier with the arrow on the drier in the direction of the refrigerant flow.
- When brazing, protect the drier by using a wet cloth to prevent the drier from overheating. Do not allow the drier to exceed 250°F (121°C).

3) Use soap bubbles to check for leaks. Raise the pressure using nitrogen gas (140 PSIG). Do not use any refrigerant as a mixture with pressurized air for leak testing.
4) Once leak checking is complete, release the nitrogen gas from the system.

3. Evacuation

1) Attach a vacuum pump to the system. Be sure to connect the charging hoses to both high and low-side refrigerant piercing valves.

IMPORTANT
The vacuum level and vacuum pump may be the same as those for current refrigerants. However, the rubber hose and gauge manifold to be used for evacuation and refrigerant charge should be exclusively for POE oils.

2) Turn on the vacuum pump, then open the gauge manifold valves. Never allow the oil in the vacuum pump to flow backwards.
3) Allow the vacuum pump to pull down to a 29.9" Hg vacuum (500 microns). Evacuating period depends on pump capacity.
4) Close the low-side valve and high-side valve on the gauge manifold.
5) Disconnect the gauge manifold hose from the vacuum pump and attach it to a refrigerant service cylinder. Remember to loosen the connection and purge the air from the hose. For the required refrigerant charge, see the nameplate. Hoshizaki recommends only virgin or reclaimed refrigerant which meets ARI Standard 700 (latest edition) be used.

4. Recharge

6) R-290 can be charged in either the liquid or vapor state.
   Liquid charge is preferred. If refrigerant charging is done in the liquid state, place the service cylinder on the scales; **if the service cylinder is not equipped with a dip tube, invert the service cylinder, then place it on the scales.** Open the high-side valve on the gauge manifold.
7) Allow the system to charge with liquid until the proper charge weight is met.
8) Close the high-side valve on the gauge manifold. If charging is complete, skip to step 10.
9) If necessary, add any remaining charge to the system through the low-side. Plug the appliance into the electrical outlet. Allow the compressor to energize.
   NOTICE! **To prevent compressor damage, use a throttling valve or liquid dispensing device to add the remaining liquid charge through the low-side refrigerant access valve with the compressor energized.** Close the refrigerant cylinder valve and let the low-side refrigerant equalize to the system, then close the low-side manifold gauge. Unplug the appliance from the electrical outlet.
10) Pinch off (crimp down) the process tubes just below the piercing valves.
11) Remove the piercing valves. Cut the process tubes to remove the piercing valve holes then braze the process tubes closed. Note: Be sure there is no refrigerant leak before brazing.
12) Use a combustible gas leak detector or soap bubbles to check for leaks again.
13) Place red sleeves over the process tubes.
14) Plug the appliance back into the electrical outlet.

B. Component Service Information

NOTICE
When replacing a component listed below, see the notes to help ensure proper operation.

Component	Notes
Compressor	Install a new start relay and compressor external protector. **WARNING! To reduce the risk of electric shock, be sure to reconnect the compressor's ground wire.**
Cabinet Thermistor	After working with or around the cabinet thermistor, make sure the cabinet thermistor is in its correct position and secure.
Defrost Thermistor	After working with or around the defrost thermistor on an SR or UF/WF, make sure the defrost thermistor wire is not touching the defrost heater and the defrost thermistor is in its correct position and secure.

V. Preparing the Appliance for Periods of Non-Use

When shutting down the appliance for periods of non-use, follow the instructions below.

⚠ WARNING
Prevent the doors from closing to reduce the risk of children getting trapped.

NOTICE
Clean the cabinet interior, door gaskets, and shelves.

1) Before shutting down the appliance, move the stored food into another refrigerator or freezer.
2) Unplug the appliance from the electrical outlet. **WARNING! To reduce the risk of electric shock, do not touch the plug with damp hands.**

VI. Disposal

⚠ DANGER

Risk of Fire or Explosion Flammable Refrigerant Used

- Follow handling instructions carefully in compliance with U.S. government regulations.
- Do not puncture refrigerant tubing. Risk of fire or explosion due to puncture of refrigerant tubing; follow handling instructions carefully.
- Dispose of properly in accordance with federal or local regulations.

Risque De Feu Ou D'Explosion Le Frigorigène Est Inflammable

- Suivre attentivement les instructions de manipulation conformément à la réglementation gouvernementale.
- Ne pas perforer la tubulure contenant le frigorigène. Risque de feu ou d'explosion si la tubulure contenant le frigorigène est perforée; suivre les instructions de manutention avec soin.
- Éliminer conformément aux règlements fédéraux ou locaux.

⚠ WARNING

When preparing the appliance for disposal, remove the doors/drawers to reduce the risk of children getting trapped. Leave any shelves in place so that children may not easily climb inside.

The appliance contains refrigerant and must be disposed of in accordance with applicable national, state, and local codes and regulations. Refrigerant must be recovered by properly certified service personnel.

VII. Technical Information

A. Electrical and Refrigerant Data

Model (includes drawer models)	AC Supply Voltage	Amperes	Design Pressure (PSIG) HIGH	Design Pressure (PSIG) LOW	Refrigerant (oz.) R290
UR/WR27B(-xxx), UR27B-GLP01, SR27B-(xxxxx)	115/60/1	3.0	360	190	2.3
UF/WF27B(-xx), UF27B-GLP01					1.9
UR/WR36B(-xx) and SR36B(-xxx)	115/60/1	3.0	360	190	2.3
UR/WR48B(-xx), UR48B-GLP01, SR48B-(xxxxx)	115/60/1	Data Pending	360	190	Data Pending
UF/WF48B(-xx)	115/60/1	Data Pending			Data Pending
UR/WR60B(-xx), SR60B-(xxxxx)	115/60/1	Data Pending	360	190	Data Pending
UF/WF60B(-xx)	115/60/1	Data Pending			Data Pending
UR/WR72B(-xx), SR72B-(xxxxx)	115/60/1	Data Pending	360	190	Data Pending

See the nameplate for electrical and refrigeration specifications. The nameplate is located inside the cabinet.
We reserve the right to make changes in specifications and design without prior notice.

Legend: UR/WR–undercounter/worktop refrigerator
SR–prep table
UF/WF–undercounter/worktop freezer

B. Wiring Diagrams

1. UR/WR27, UR/WR36, UR/WR48 (except glass door), and SR36

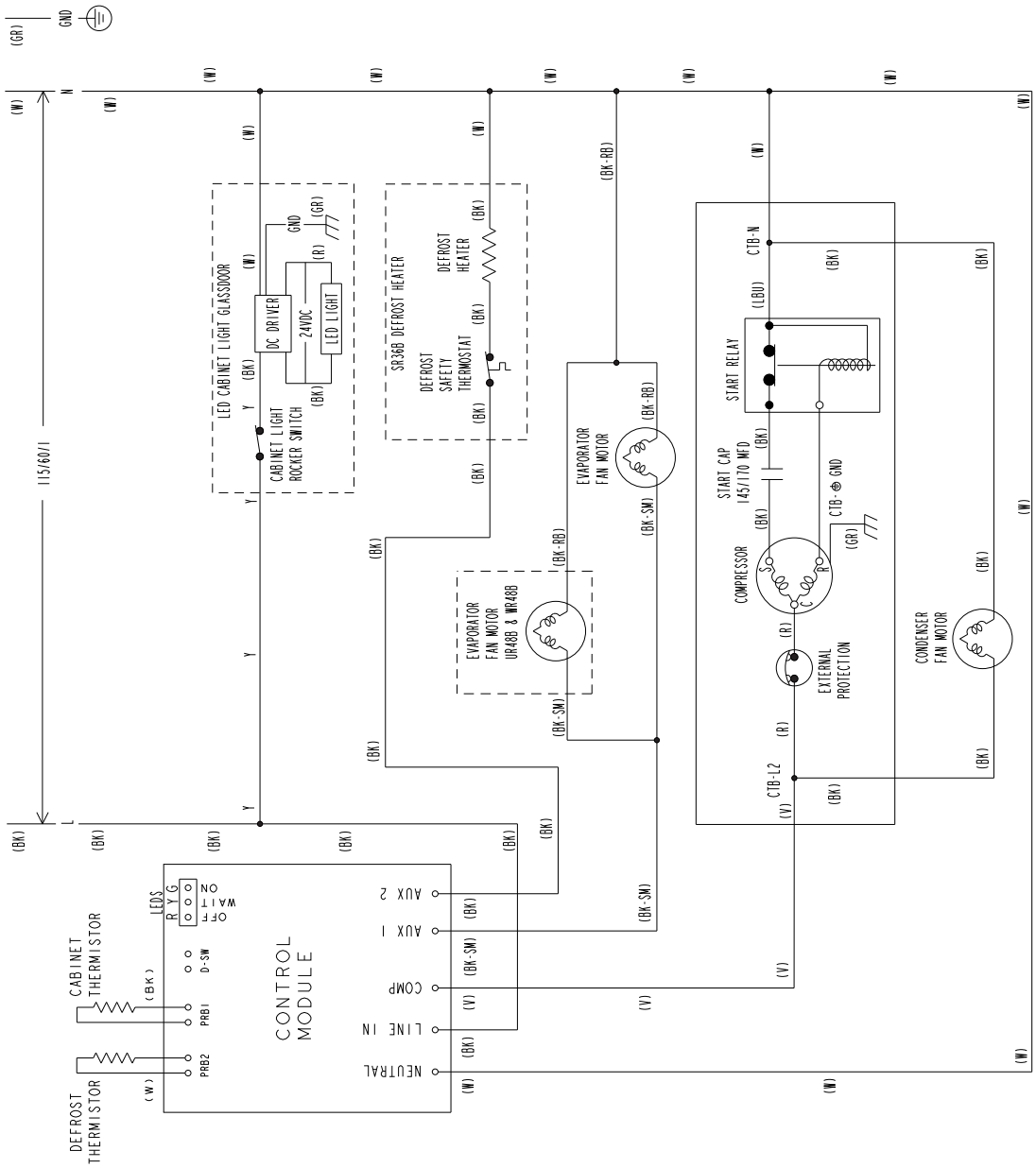

R	Y	G	LED OPERATION
X	✓	X	5-sec DELAY
X	X	✓	SYSTEM ON
X	X	✸	CTh SATISFIED SYSTEM OFF
X	✸	X	2-min ON/OFF DELAY
✓	X	✓	DEFROST/DTh FAULT
◯	◯	✓	SYSTEM OFF
X	✸	✸	CTh FAULT

LED OPERATION	LEGEND
◯	CYCLING
✸	FLASHING
✓	ON
X	OFF

WIRE COLOR CODE	
BK	BLACK
BK-SM	BLACK SMOOTH
BK-RB	BLACK RIBBED
BR	BROWN
DBU	DARK BLUE
GR	GREEN
GY	GRAY
LBU	LIGHT BLUE
O	ORANGE
P	PINK
R	RED
V	VIOLET
W	WHITE
Y	YELLOW

CTB = COMPRESSOR COVER TERMINAL BLOCK	
L1	NOT USED
L2	LINE
N	NEUTRAL
⏚	GROUND

2. UF/WF27, SR27, and SR48

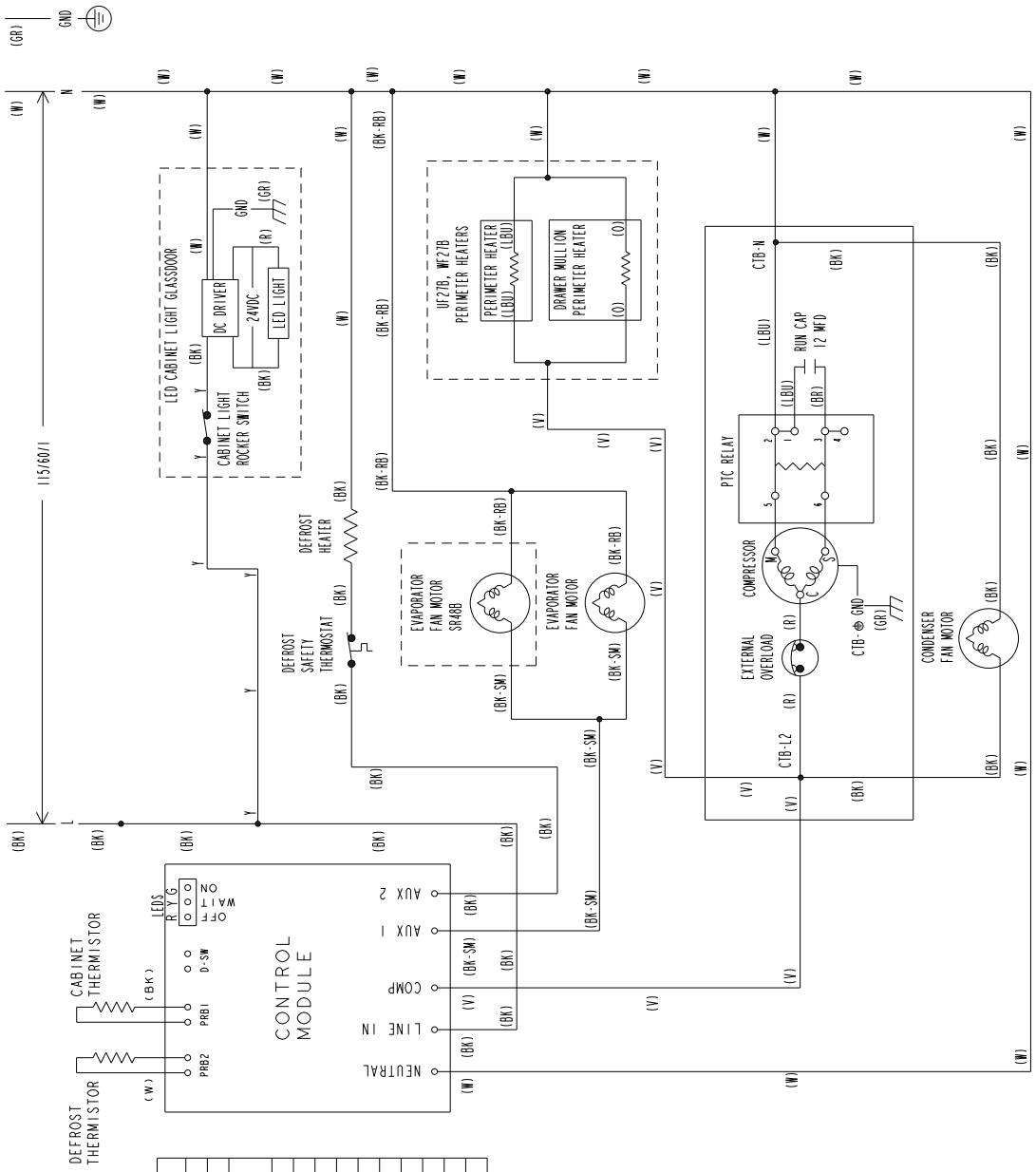

R	Y	G	LED OPERATION
X	/	X	5-sec DELAY
X	X	/	SYSTEM ON
X	X	✸	CTh SATISFIED SYSTEM OFF
X	✸	X	2-min ON/OFF DELAY
/	X	/	DEFROST/DTh FAULT
○	○	○	SYSTEM OFF
X	✸	✸	CTh FAULT

LED OPERATION	LEGEND
○	CYCLING
✸	FLASHING
/	ON
X	OFF

WIRE COLOR CODE	
BK	BLACK
BK-SM	BLACK SMOOTH
BK-RB	BLACK RIBBED
BR	BROWN
DBU	DARK BLUE
GR	GREEN
GY	GRAY
LBU	LIGHT BLUE
O	ORANGE
P	PINK
R	RED
V	VIOLET
W	WHITE
Y	YELLOW

CTB = COMPRESSOR COVER TERMINAL BLOCK	
L1	NOT USED
L2	LINE
N	NEUTRAL
⏚	GROUND

3. UR/WR48 (glass door), UR/WR60, and UR/WR72

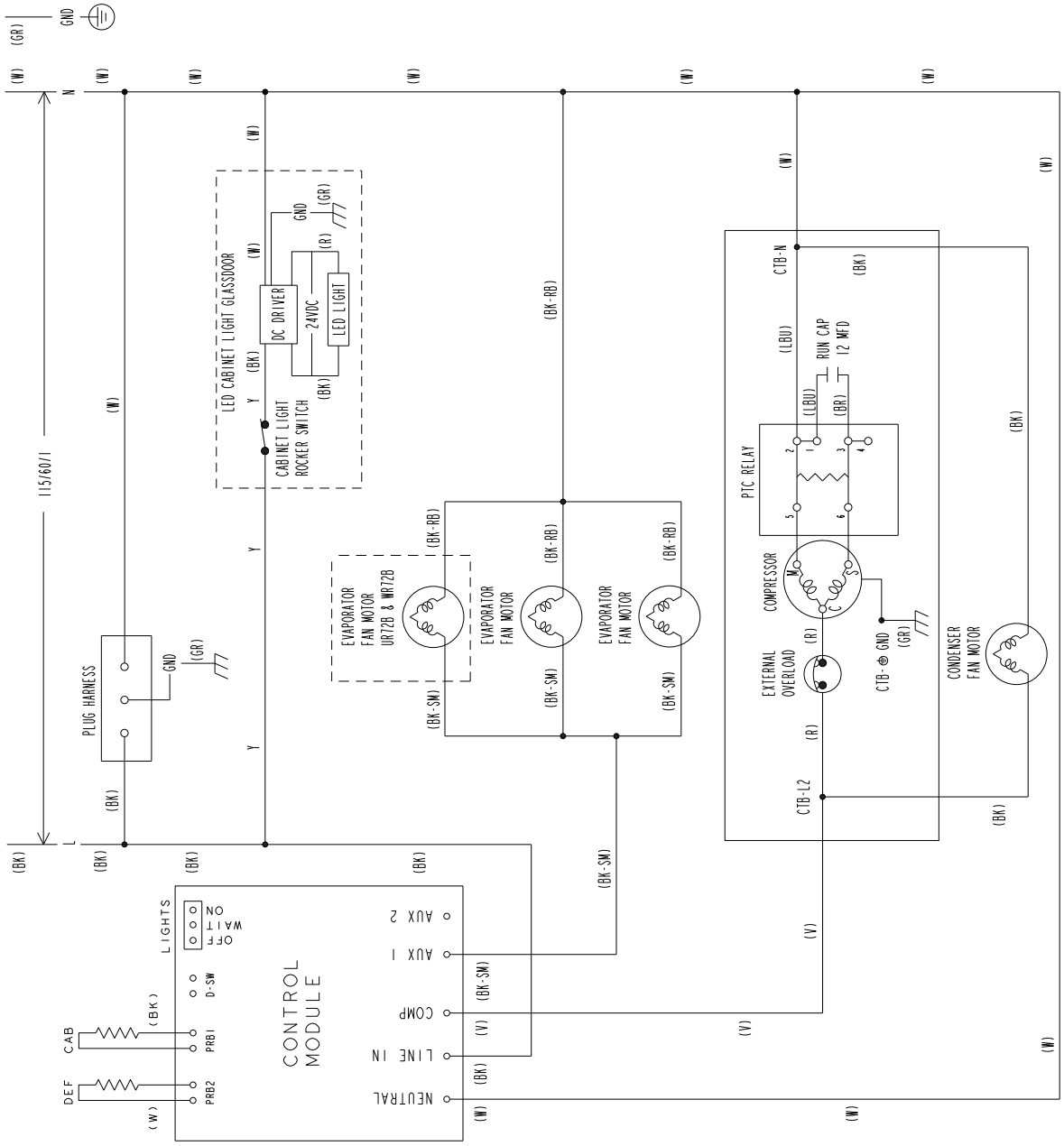

R	Y	G	LED OPERATION
X	X	X	5-sec DELAY
X	X	✓	SYSTEM ON
X	X	●	CTh SATISFIED SYSTEM OFF
X	●	X	2-min ON/OFF DELAY
✓	X	✓	DEFROST/DTh FAULT
◯	◯	◯	SYSTEM OFF
X	●	●	CTh FAULT

LED OPERATION	LEGEND
◯	CYCLING
●	FLASHING
✓	ON
X	OFF

WIRE COLOR CODE	
BK	BLACK
BK-SM	BLACK SMOOTH
BK-RB	BLACK RIBBED
BR	BROWN
DBU	DARK BLUE
GR	GREEN
GY	GRAY
LBU	LIGHT BLUE
O	ORANGE
P	PINK
R	RED
V	VIOLET
W	WHITE
Y	YELLOW

CTB = COMPRESSOR COVER TERMINAL BLOCK	
L1	NOT USED
L2	LINE
N	NEUTRAL
⏚	GROUND

4. UF/WF48, UF/WF60, SR60, and SR72

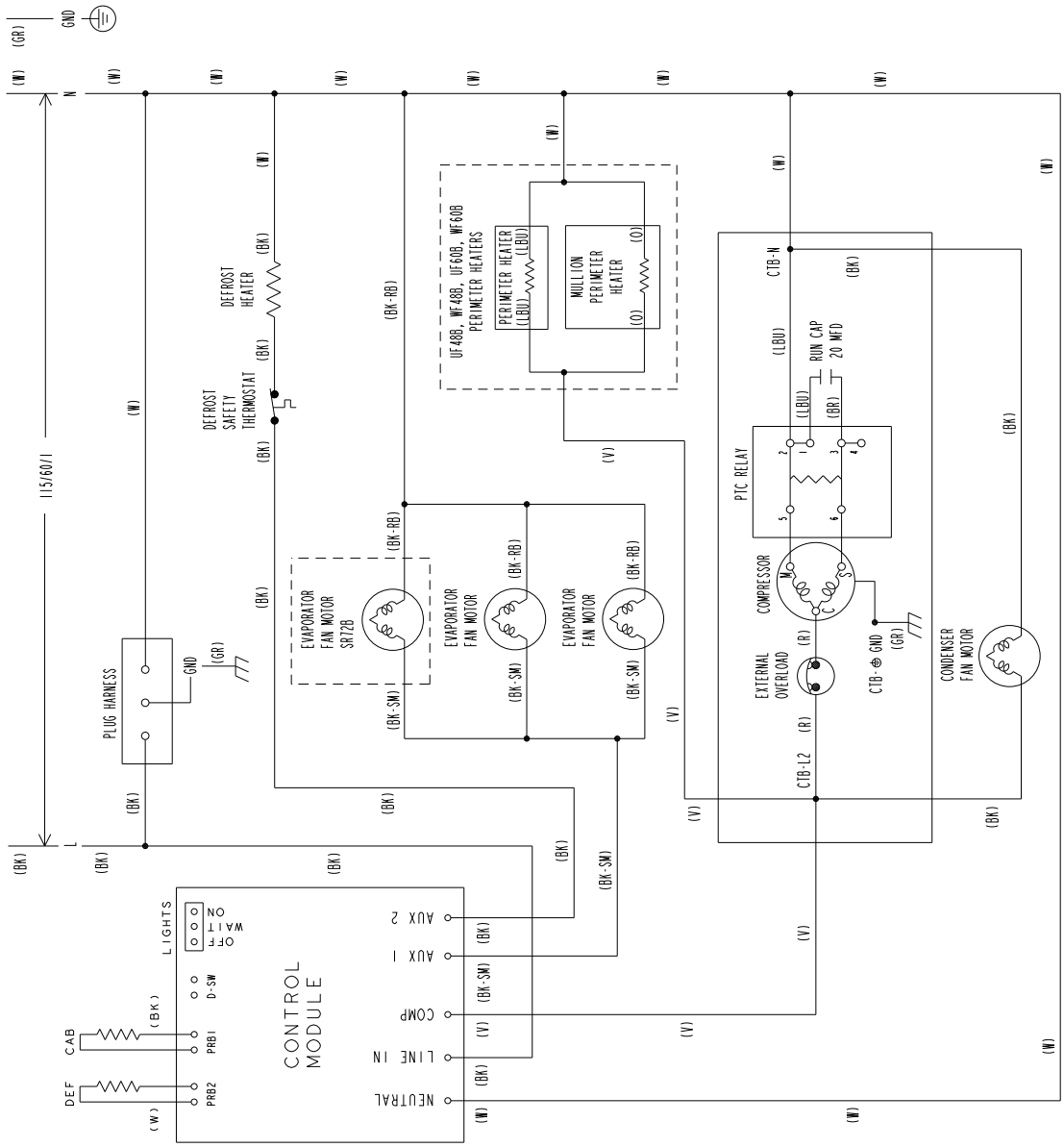

R	Y	G	LED OPERATION
X	X	X	5-sec DELAY
X	X	X	SYSTEM ON
X	X	●	CTh SATISFIED SYSTEM OFF
X	●	X	2-min ON/OFF DELAY
X	X	X	DEFROST/DTh FAULT
X	X	○	SYSTEM OFF
X	●	●	CTh FAULT

LED OPERATION	LEGEND
○	CYCLING
●	FLASHING
X	ON
X	OFF

WIRE COLOR CODE	
BK	BLACK
BK-SM	BLACK SMOOTH
BK-RB	BLACK RIBBED
BR	BROWN
DBU	DARK BLUE
GR	GREEN
GY	GRAY
LBU	LIGHT BLUE
O	ORANGE
P	PINK
R	RED
V	VIOLET
W	WHITE
Y	YELLOW

CTB = COMPRESSOR COVER TERMINAL BLOCK	
L1	NOT USED
L2	LINE
N	NEUTRAL
⏚	GROUND