# HOSHIZAKI

# Parts List

## Modular Crescent Cuber

## Models
## KML-451MAH
## KML-451MWH

hoshizakiamerica.com

Number: 71262
Issued: 10-12-2006
Revised: 7-7-2021

# CONTENTS

Auxiliary Codes ..... 3
Note About Ordering Parts ..... 3
A. Ice Cuber Assembly & Refrigeration Circuit ..... 4
KML-451MAH ..... 4
KML-451MWH ..... 6
KML-451MAH, KML-451MWH ..... 8
C. Control Box Assembly ..... 10
D. Accessories & Labels ..... 12

## Auxiliary Codes

| | | |
|---|---|---|
| **KML-451MAH** | R-0 | June 2006 |
| | S-1 | January 2007 |
| | S-2 | December 2007 |
| | T-0 | January 2008 |
| | T-1 | November 2008 |
| | T-2 | December 2008 |
| | U-0 | January 2009 |
| | U-1 | August 2009 |
| | V-0 | January 2010 |
| | V-1 | July 2010 |
| | A-0 | January 2011 |
| | A-1 | September 2011 |
| | B-0 | January 2012 |
| | B-1 | November 2012 |
| | C-0 | January 2013 |
| | D-0 | January 2014 |
| | E-0 | February 2015 |
| | F-0 | January 2016 |
| | G-0 | January 2017 |

| | | |
|---|---|---|
| **KML-451MWH** | R-0 | June 2006 |
| | S-1 | April 2007 |
| | S-2 | December 2007 |
| | T-0 | January 2008 |
| | U-0 | January 2009 |
| | U-1 | January 2009 |
| | V-0 | January 2010 |
| | V-1 | July 2010 |
| | V-2 | December 2010 |
| | A-0 | January 2011 |
| | A-1 | September 2011 |
| | B-0 | January 2012 |
| | B-1 | November 2012 |
| | C-0 | January 2013 |
| | D-0 | January 2014 |
| | E-0 | February 2015 |
| | F-0 | January 2016 |
| | G-0 | January 2017 |

## Auxiliary Code Breakdown

The auxiliary code is the first two characters in the serial number. The first character indicates the year. Years progress or regress in alphabetical order. The series runs from "A" through "V" and the letters "I" and "O" are skipped. The second character indicates significant part changes within a year. Base is "0" and this number advances for each change. In cases where there is a letter in parentheses, this designates the month. This is the last character in the serial number. The series runs from "(A)" through "(M)" and the letter "(I)" is skipped. This designation is only included when identifying a parts change within an auxiliary code.

## Note About Ordering Parts

Most assemblies cannot be ordered as complete units; parts in the assemblies generally must be ordered separately.

## A. Ice Cuber Assembly & Refrigeration Circuit
### KML-451MAH
R-0 to G-0

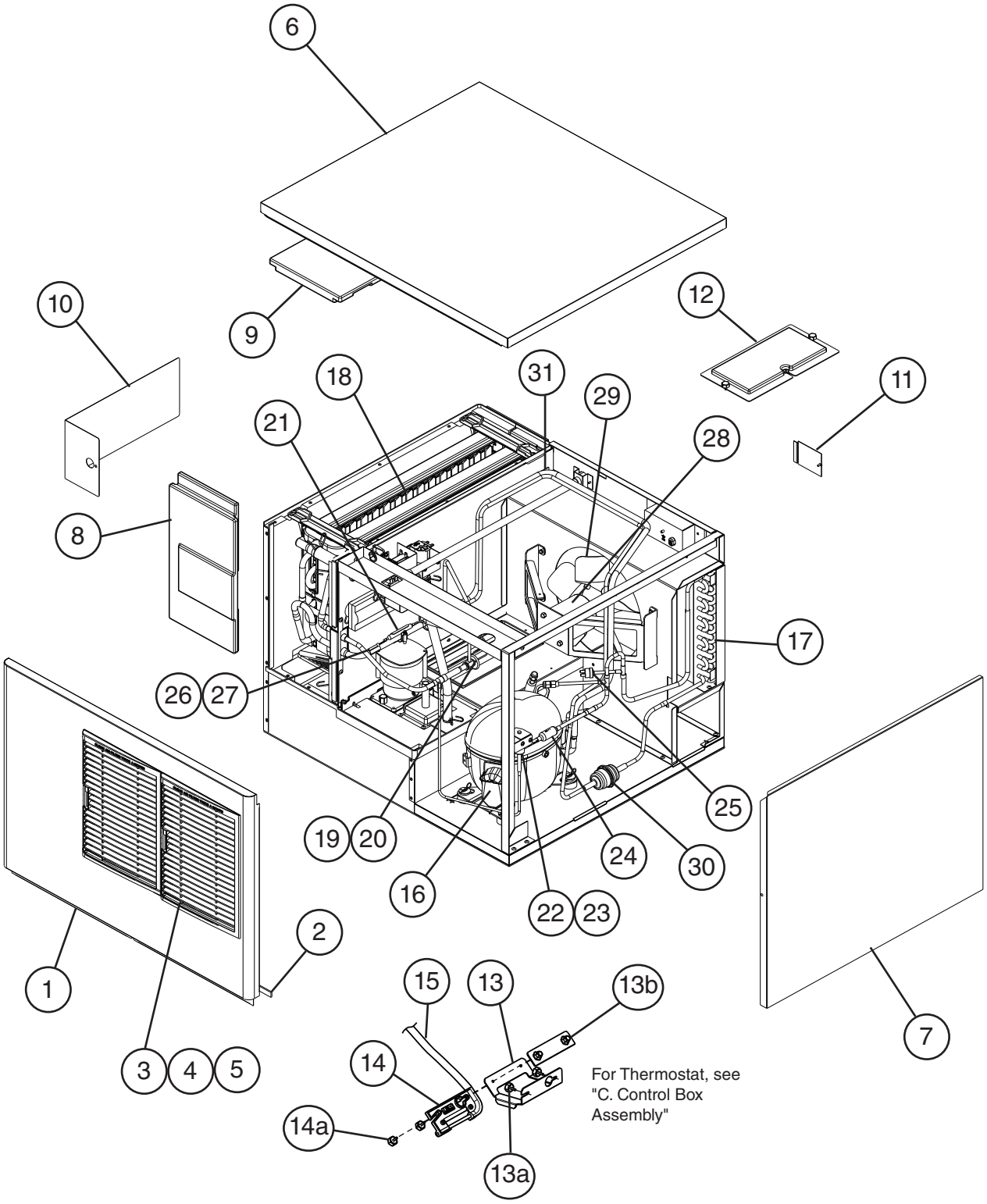

| Title: A. Ice Cuber Assembly Model: KML-451MAH | | | | | | | | | | | | |
|---|---|---|---|---|---|---|---|---|---|---|---|---|
| | | | | Required Number | | | | | | | | |
| Index No. | Description | Material Or Model Number | Part Number | R-0 to T-0 T-2 U-0 | T-1 U-1 to G-0 | | | | | | | |
| **Ice Cuber Assembly** | | | | | | | | | | | | |
| 1 | Front Panel | | 2A2107-01 | 1 | 1 | | | | | | | |
| 2 | Gasket | | 4A0808L02 | 1 | 1 | | | | | | | |
| 3 | Louver | | 1A0548-01 | 2 | 2 | | | | | | | |
| 4 | Push Retainer | | 4A2414-01 | 6 | 6 | | | | | | | |
| 5 | Air Filter | | 2A2063G01 | 2 | 2 | | | | | | | |
| 6 | Top Panel | | 3A1862A01 | 1 | 1 | | | | | | | |
| 7 | Right Side Panel | | 2A2111G01 | 1 | 1 | | | | | | | |
| 8 | Front Insulation | | 2A4540A01 | 1 | 1 | | | | | | | |
| 9 | Top Insulation | | 215730G01 | 1 | 1 | | | | | | | |
| 10 | Control Box Cover | | 3A2371-01 | 1 | 1 | | | | | | | |
| 11 | Junction Box Cover | | 433410-01 | 1 | 1 | | | | | | | |
| 12 | Bin Control Cover | | 3A0586-01 | 1 | 1 | | | | | | | |
| 13 | Bin Control Thermostat Extension Bracket | | 4A4358-01 | 1 | 1 | | | | | | | |
| 13a | Thumbscrew | | 415949G10 | 2 | 2 | | | | | | | |
| 13b | NSF Plate | | 4A4401G01 | 1 | 1 | | | | | | | |
| 14 | Bin Control Bulb Holder | | 3A3903-01 | | 1 | | | | | | | |
| 14a | Thumbscrew | | 415949G11 | | 2 | | | | | | | |
| 15 | Silicone Hose | L=310 mm | 7730I3812 | 1 | 1 | | | | | | | |
| | | | | | | | | | | | | |
| **Refrigeration Circuit** | | | | | | | | | | | | |
| 16 | Compressor | | 4A2300-01 | 1 | - | | | | | | | |
| | | | 4A4479-01 | | 1 | | | | | | | |
| 17 | Condenser | | 2A0640-01 | 1 | 1 | | | | | | | |
| 18 | Evaporator Assembly | **SP-5370** | SP-5364 | 1 | 1 | | | | | | | |
| 19 | Thermostatic Expansion Valve | | 4A4008-01 | 1 | - | | | | | | | |
| | | | 4A1684-01 | | 1 | | | | | | | |
| 20 | Thermostatic Expansion Valve Cover | | 3A0944-01 | 1 | 1 | | | | | | | |
| 21 | Thermostatic Expansion Valve Bulb Holder | | 3A0107-01 | 1 | 1 | | | | | | | |
| 22 | Hot Gas Valve Body | | 4A3978-01 | 1 | 1 | | | | | | | |
| 23 | Valve Coil | | 4A3277-01 | 1 | 1 | | | | | | | |
| 24 | Strainer | | 4A0397-01 | 1 | - | | | | | | | |
| | | | 441569-02 | | 1 | | | | | | | |
| 25 | High-Pressure Switch | | 433441-07 | 1 | - | | | | | | | |
| | | | 463180-04 | | 1 | | | | | | | |
| 26 | Thermistor | | 429006-03 | 1 | 1 | | | | | | | |
| 27 | Thermistor Holder | | 427430-01 | 1 | 1 | | | | | | | |
| 28 | Fan Motor | | 4A3158-01 | 1 | 1 | | | | | | | |
| 29 | Fan Blade | | 4A4014-01 | 1 | 1 | | | | | | | |
| 30 | Drier | | 4A2666-01 | 1 | 1 | | | | | | | |
| 31 | Heat Exchanger | | 2A3685G01 | 1 | - | | | | | | | |
| | | | 2A4894G01 | | 1 | | | | | | | |

## A. Ice Cuber Assembly & Refrigeration Circuit
### KML-451MWH
V-0 to G-0

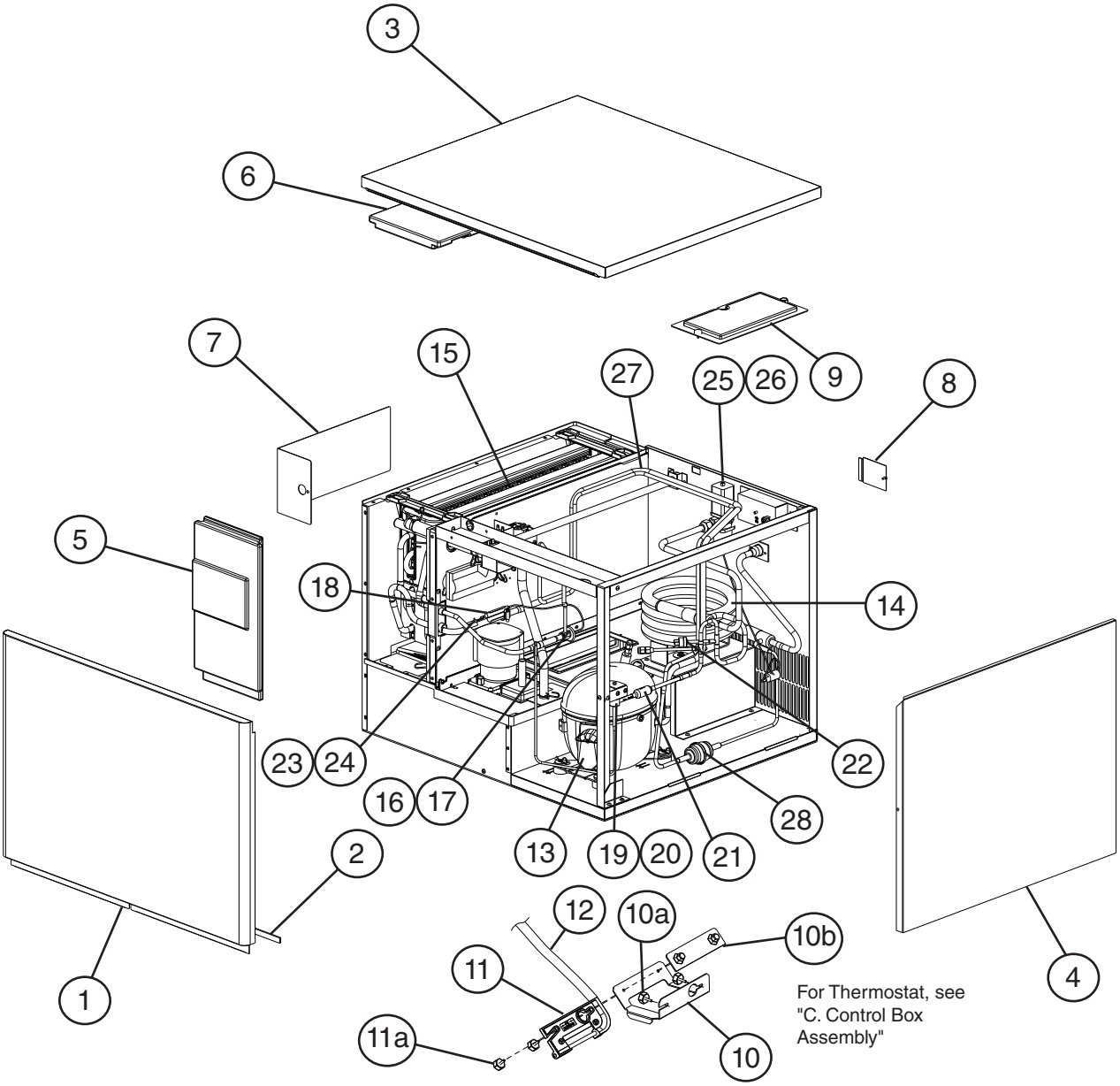

| Title: A. Ice Cuber Assembly Model: KML-451MWH | | | | | | | | | | | | |
|---|---|---|---|---|---|---|---|---|---|---|---|---|
| | | | | Required Number | | | | | | | | |
| Index No. | Description | Material or Model Number | Part Number | R-0 to U-0 | U-1 to B-1 | C-0 to G-0 | | | | | | |
| **Ice Cuber Assembly** | | | | | | | | | | | | |
| 1 | Front Panel | | 2A2107-02 | 1 | 1 | 1 | | | | | | |
| 2 | Gasket | | 4A0808L02 | 1 | 1 | 1 | | | | | | |
| 3 | Top Panel | | 3A1862A01 | 1 | 1 | 1 | | | | | | |
| 4 | Right Side Panel | | 2A2111G01 | 1 | 1 | 1 | | | | | | |
| 5 | Front Insulation | | 2A0664G01 | 1 | 1 | 1 | | | | | | |
| 6 | Top Insulation | | 215730G01 | 1 | 1 | 1 | | | | | | |
| 7 | Control Box Cover | | 3A2371-01 | 1 | 1 | 1 | | | | | | |
| 8 | Junction Box Cover | | 433410-01 | 1 | 1 | 1 | | | | | | |
| 9 | Bin Control Cover | | 3A0586-01 | | | | | | | | | |
| 10 | Bin Control Thermostat Extension Bracket | | 4A4358-01 | 1 | 1 | 1 | | | | | | |
| 10a | Thumbscrew | | 415949G10 | 2 | 2 | 2 | | | | | | |
| 10b | NSF Plate | | 4A4401G01 | 1 | 1 | 1 | | | | | | |
| 11 | Bin Control Bulb Holder | | 3A3903-01 | | 1 | 1 | | | | | | |
| 11a | Thumbscrew | | 415949G11 | | 2 | 2 | | | | | | |
| 12 | Silicone Hose | L=310 mm | 7730I3812 | 1 | 1 | 1 | | | | | | |
| | | | | | | | | | | | | |
| **Refrigeration Circuit** | | | | | | | | | | | | |
| 13 | Compressor | | 4A2300-01 | 1 | - | | | | | | | |
| | | | 4A4376-01 | | 1 | 1 | | | | | | |
| 14 | Condenser | | 2A2359G01 | 1 | 1 | - | | | | | | |
| | | | 3A7321-01 | | | 1 | | | | | | |
| 14a | Hex Head Bolt w/Washer (LF) | 5×12 | 7B0130512 | 2 | 2 | 2 | | | | | | |
| 15 | Evaporator | **SP-5370** | SP-5364 | 1 | 1 | 1 | | | | | | |
| 16 | Thermostatic Expansion Valve | | 4A4008-01 | 1 | - | | | | | | | |
| | | | 4A1684-01 | | 1 | 1 | | | | | | |
| 17 | Thermostatic Expansion Valve Cover | | 3A0944-01 | 1 | 1 | 1 | | | | | | |
| 18 | Thermostatic Expansion Valve Bulb Holder | | 3A0107-01 | 1 | 1 | 1 | | | | | | |
| 19 | Hot Gas Valve Body | | 4A3978-01 | 1 | 1 | 1 | | | | | | |
| 20 | Valve Coil | | 4A3277-01 | 1 | 1 | 1 | | | | | | |
| 21 | Strainer | | 4A0397-01 | 1 | - | | | | | | | |
| | | | 441569-02 | | 1 | 1 | | | | | | |
| 22 | High-Pressure Switch | | 433441-05 | 1 | - | | | | | | | |
| | | | 463180-05 | | 1 | 1 | | | | | | |
| 23 | Thermistor | | 429006-03 | 1 | 1 | 1 | | | | | | |
| 24 | Thermistor Holder | | 427430-01 | 1 | 1 | 1 | | | | | | |
| 25 | Water Regulator | | 4A0911-06 | 1 | 1 | 1 | | | | | | |
| 26 | Male Connector | | 4A1087-01 | 1 | 1 | 1 | | | | | | |
| 27 | Heat Exchanger | | 2A3685G01 | 1 | - | | | | | | | |
| | | | 2A4894G01 | | 1 | 1 | | | | | | |
| 28 | Drier | | 4A2666-01 | 1 | 1 | 1 | | | | | | |

## B. Water Circuit

### KML-451MAH, KML-451MWH

R-0 to G-0

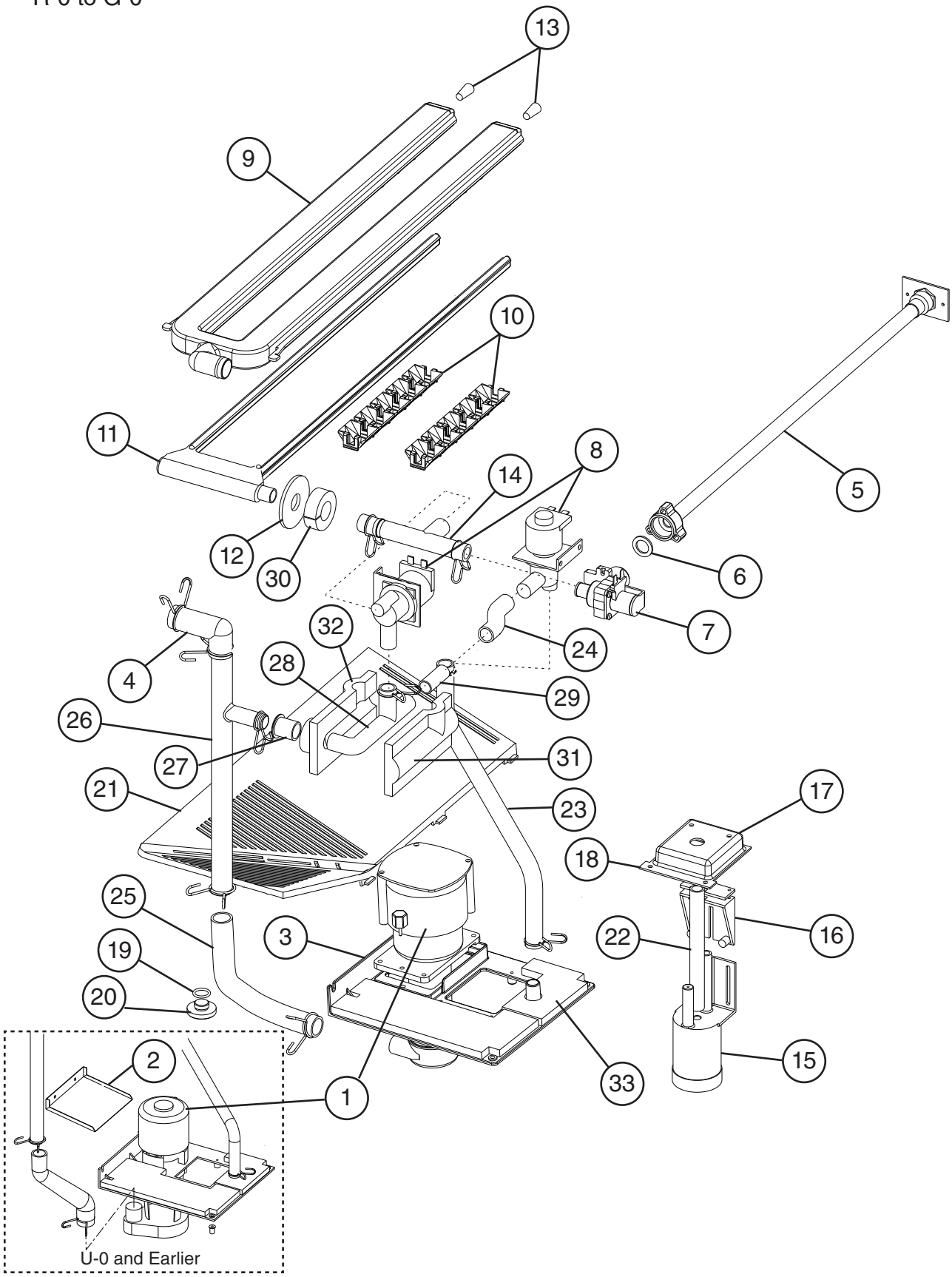

| Title: B. Water Circuit Model: KML-451MAH, KML-451MWH | | | | | | | | | | | | |
|---|---|---|---|---|---|---|---|---|---|---|---|---|
| | | | | Required Number | | | | | | | | |
| Index No. | Description | Material or Model Number | Part Number | R-0 S-1 | S-2 T-0 | T-0 to U-0 | U-1 to G-0 | | | | | |
| 1 | Pump Motor | | HS-0232 | 1 | 1 | 1 | - | | | | | |
| | | | 4A4259-01 | | | | 1 | | | | | |
| 2 | Barrier | | 4A2997-01 | 1 | 1 | 1 | - | | | | | |
| 3 | Pump Motor Bracket | | 2A4920G01 | | | | 1 | | | | | |
| 4 | Elbow | | 4A0393-01 | 1 | 1 | 1 | 1 | | | | | |
| 5 | Water Supply Pipe | | 4A0768G04 | 1 | 1 | 1 | 1 | | | | | |
| 6 | Rubber Gasket | | 413854-03 | 1 | 1 | 1 | 1 | | | | | |
| 7 | Inlet Water Valve | | 3U0150-01 | 1 | 1 | 1 | 1 | | | | | |
| 8 | Solenoid Valve (Drain and Cleaning Valve) | | 439322-01 | 2 | - | | | | | | | |
| | | | 4A3722-01 | | 2 | 2 | 2 | | | | | |
| 9 | Spray Tube | | 1A0260-02 | 1 | 1 | 1 | 1 | | | | | |
| 10 | Spray Guide | | 208586-01 | 6 | 6 | 6 | 6 | | | | | |
| 11 | Water Supply Tube | | 2A0079-01 | 1 | 1 | 1 | 1 | | | | | |
| 12 | Flange | | 439267-01 | 1 | 1 | 1 | 1 | | | | | |
| 13 | Plug | | 4A0176-01 | 2 | 2 | 2 | 2 | | | | | |
| 14 | Water Supply Tee | | 4A1006-01 | 1 | 1 | 1 | 1 | | | | | |
| 15 | Float Switch | | 4A3624-01 | 1 | 1 | 1 | 1 | | | | | |
| 16 | Float Switch Bracket | | 327757-01 | 1 | 1 | 1 | 1 | | | | | |
| 17 | Float Switch Cover | | 3A0665-01 | 1 | 1 | 1 | 1 | | | | | |
| 18 | Float Switch Spacer | | 4A0650-01 | | | | 1 | | | | | |
| 19 | O-Ring | | 7611-P015 | 1 | 1 | 1 | 1 | | | | | |
| 20 | Drain Plug | | 309246-01 | 1 | 1 | 1 | 1 | | | | | |
| 21 | Cube Guide | | 2A0660-01 | 1 | 1 | 1 | 1 | | | | | |
| 22 | Vinyl Hose | L=150 mm | 7716-1216 | 1 | 1 | 1 | 1 | | | | | |
| 23 | Vinyl Hose | L=325 mm | 7716-1519 | 1 | 1 | 1 | 1 | | | | | |
| 24 | Vinyl Hose | L=55 mm | 7716-1519 | 1 | 1 | 1 | 1 | | | | | |
| 25 | Pump Hose | | 325867-01 | 1 | 1 | 1 | 1 | | | | | |
| 26 | Connecting Pipe | | 3A1335-01 | 1 | 1 | 1 | 1 | | | | | |
| 27 | Rubber Ring | | 4A1004-01 | 1 | 1 | 1 | 1 | | | | | |
| 28 | By Pass Hose | | 4A1005-01 | 1 | 1 | 1 | 1 | | | | | |
| 29 | Joing Pipe | | 439329-01 | 1 | 1 | 1 | 1 | | | | | |
| 30 | Insulation E | | 4A0392-01 | 1 | 1 | 1 | 1 | | | | | |
| 31 | Insulation A1 | | 4A1259-01 | 1 | 1 | 1 | 1 | | | | | |
| 32 | Insulation A2 | | 4A1260-01 | 1 | 1 | 1 | 1 | | | | | |
| 33 | Insulation B | | 4A1053-01 | 1 | 1 | 1 | 1 | | | | | |
| **Hose Clamps** | | | | | | | | | | | | |
| | Hose Clamp | 18 mm | 427443-05 | 5 | 5 | 5 | 5 | | | | | |
| | Hose Clamp | 27 mm | 427443-08 | 1 | 1 | 1 | 1 | | | | | |
| | Hose Clamp | 20 mm | 427443-06 | 2 | 2 | 2 | 2 | | | | | |
| | Hose Clamp | 18 mm | 4A2017-06 | 3 | - | | | | | | | |
| | | | 427443-05 | | 3 | 3 | 3 | | | | | |
| | Hose Clamp | 25 mm | 427443-03 | 3 | 3 | 3 | 3 | | | | | |

## C. Control Box Assembly
### KML-451MAH, KML-451MWH
R-0 to G-0

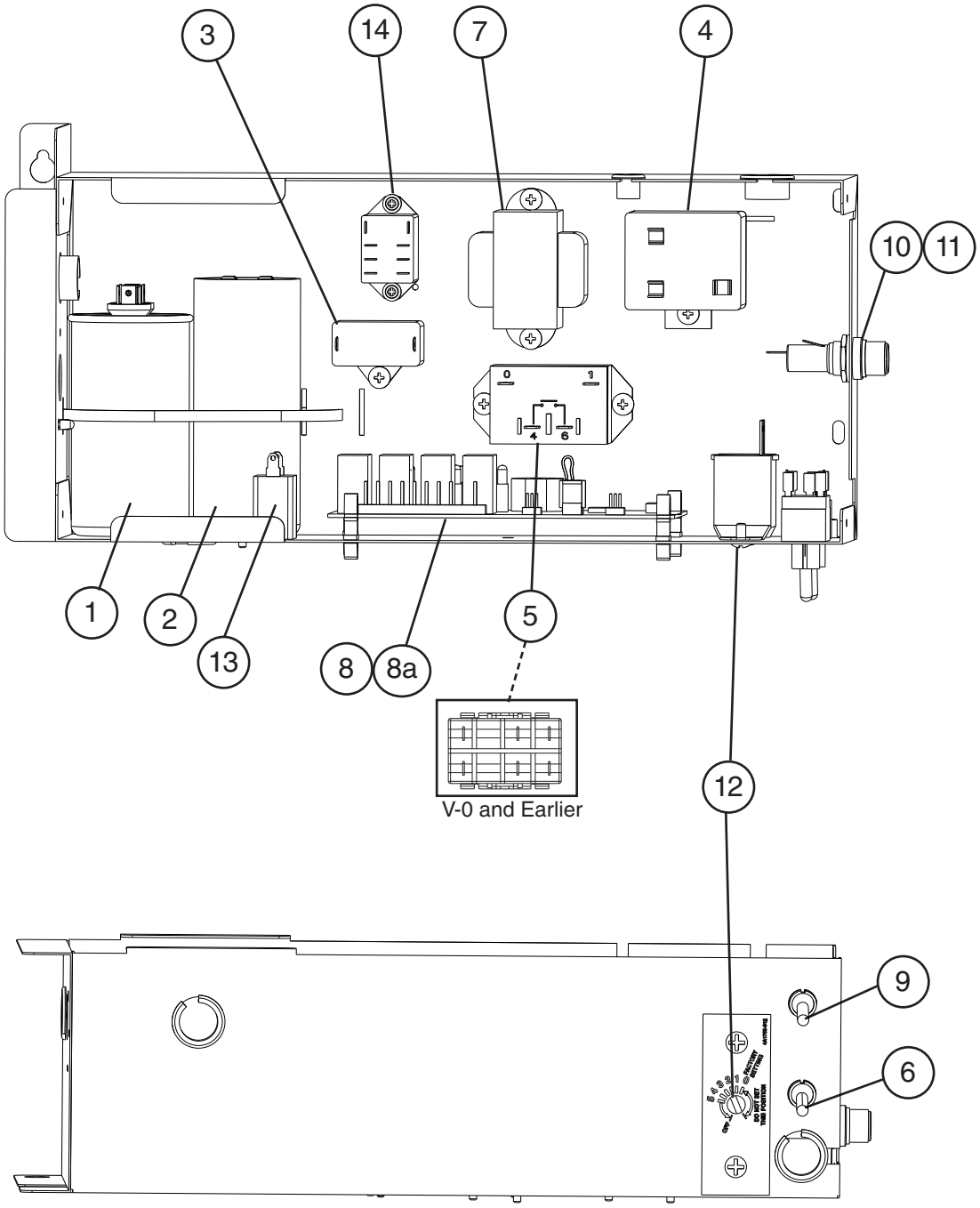

| Title: C. Control Box Assembly Model: KML-451MAH, KML-451MWH | | | | | | | | | | | | |
|---|---|---|---|---|---|---|---|---|---|---|---|---|
| | | | | Required Number | | | | | | | | |
| Index No. | Description | Material or Model Number | Part Number | R-0 to T-0 T-2 U-0 | T-1 U-1 to V-0 | V-1 to B-0 | B-1 to G-0 | | | | | |
| 1 | Start Capacitor | 243-292MFD, 115VAC | 3A0076-10 | 1 | - | | | | | | | |
| | | 243-292MFD, 165VAC | 3A0076-20 | | 1 | 1 | 1 | | | | | |
| 2 | Run Capacitor | 15MFD, 370VAC | 3A2005-08 | 1 | - | | | | | | | |
| | | 35MFD, 440VAC | 3A2005-12 | | 1 | 1 | 1 | | | | | |
| 3 | Fan Motor Capacitor | **KML-451MAH** 5MFD, 250 VAC | 443192-02 | 1 | 1 | 1 | 1 | | | | | |
| 4 | Start Relay | | 4A1107-11 | 1 | 1 | 1 | 1 | | | | | |
| 5 | Magnetic Contactor | | 428393-01 | 1 | 1 | - | | | | | | |
| | Compressor Relay | | 4A3140-01 | | | 1 | 1 | | | | | |
| 6 | Service Switch | | 4A0985-01 | 1 | 1 | 1 | 1 | | | | | |
| 7 | Control Transformer | | 3A0172-01 | 1 | 1 | 1 | 1 | | | | | |
| 8 | Control Board | "E" Control Board | 2A1410-01 | 1 | 1 | 1 | - | | | | | |
| | | "G" Control Board | 2A3792-01 | | | | 1 | | | | | |
| 8a | Control Board Support | | 4A0336-03 | 4 | 4 | 4 | 4 | | | | | |
| 9 | Control Switch | | 443119-01 | 1 | 1 | 1 | 1 | | | | | |
| 10 | Fuse Holder | | 4A5443-01 | 1 | 1 | 1 | 1 | | | | | |
| 11 | Fuse | | 4A0893-07 | 2 | 2 | 2 | 2 | | | | | |
| 12 | Bin Control Thermostat | | 4A2879-01 | 1 | 1 | 1 | 1 | | | | | |
| 13 | Pump Motor Capacitor | 2.5 MFD, 250 VAC | 4A2128-05 | | | 1 | 1 | | | | | |
| 14 | Relay (Drain) | | 406132-07 | 1 | 1 | 1 | 1 | | | | | |

## D. Accessories & Labels
### KML-451MAH, KML-451MWH
R-0 to G-0

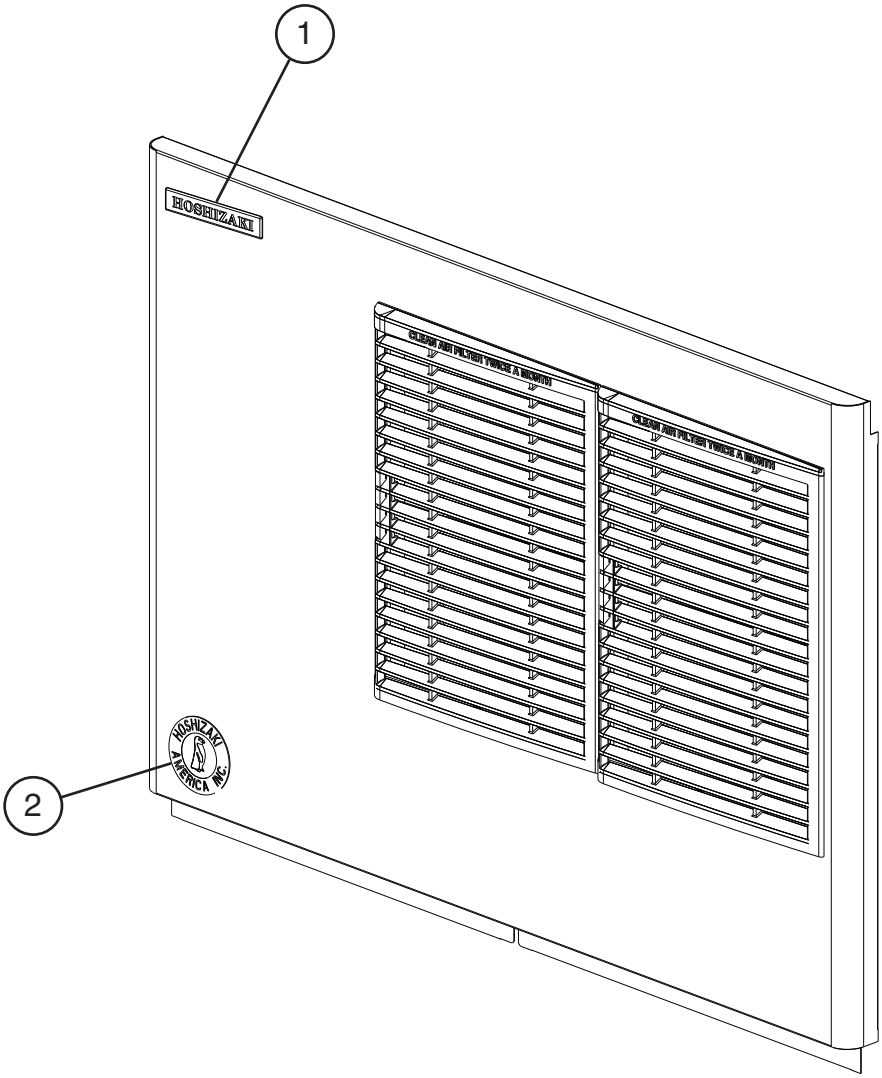


| Title: D. Accessories & Labels Model: KML-451MAH, KML-451MWH | | | | | | | | | | | | |
|---|---|---|---|---|---|---|---|---|---|---|---|---|
| | | | | Required Number | | | | | | | | |
| Index No. | Description | Material or Model Number | Part Number | R-0 to G-0 | | | | | | | | |
| 1 | Hoshizaki Emblem Label | | 4A0560-01 | 1 | | | | | | | | |
| 2 | Penguin Label | | 4A0526-01 | 1 | | | | | | | | |
| 3 | Universal Brace | | 4A0363-01 | 2 | | | | | | | | |
| 3a | Hex Head Bolt | 5×12 | 7B02-0512 | 2 | | | | | | | | |