HOSHIZAKI

Parts List

Stackable Crescent Cuber

Models
KMH-2100SWJ3
KMH-2100SRJ/3

hoshizakiamerica.com

Number: 71410
Issued: 4-18-2018

CONTENTS

Auxiliary Codes 3
Note About Ordering Parts 3
A. Main Assembly & Refrigeration Circuit 4
KMH-2100SWJ3 4
KMH-2100SRJ/3 7
B. Water Circuit 10
C. Control Box Assembly 13
D. Accesories & Labels 14

Auxiliary Codes

KMH-2100SWJ3
H-0 January 2018

KMH-2100SRJ
H-0 January 2018

KMH-2100SRJ3
H-0 January 2018

Auxiliary Code Breakdown

The auxiliary code is the first two characters in the serial number. The first character indicates the year. Years progress or regress in alphabetical order. The series runs from "A" through "V" and the letters "I" and "O" are skipped. The second character indicates significant part changes within a year. Base is "0" and this number advances for each change. In cases where there is a letter in parentheses, this designates the month. This is the last character in the serial number. The series runs from "(A)" through "(M)" and the letter "(I)" is skipped. This designation is only included when identifying a parts change within an auxiliary code.

Note About Ordering Parts

Most assemblies cannot be ordered as complete units; parts in the assemblies generally must be ordered separately.

A. Main Assembly & Refrigeration Circuit
KMH-2100SWJ3

H-0

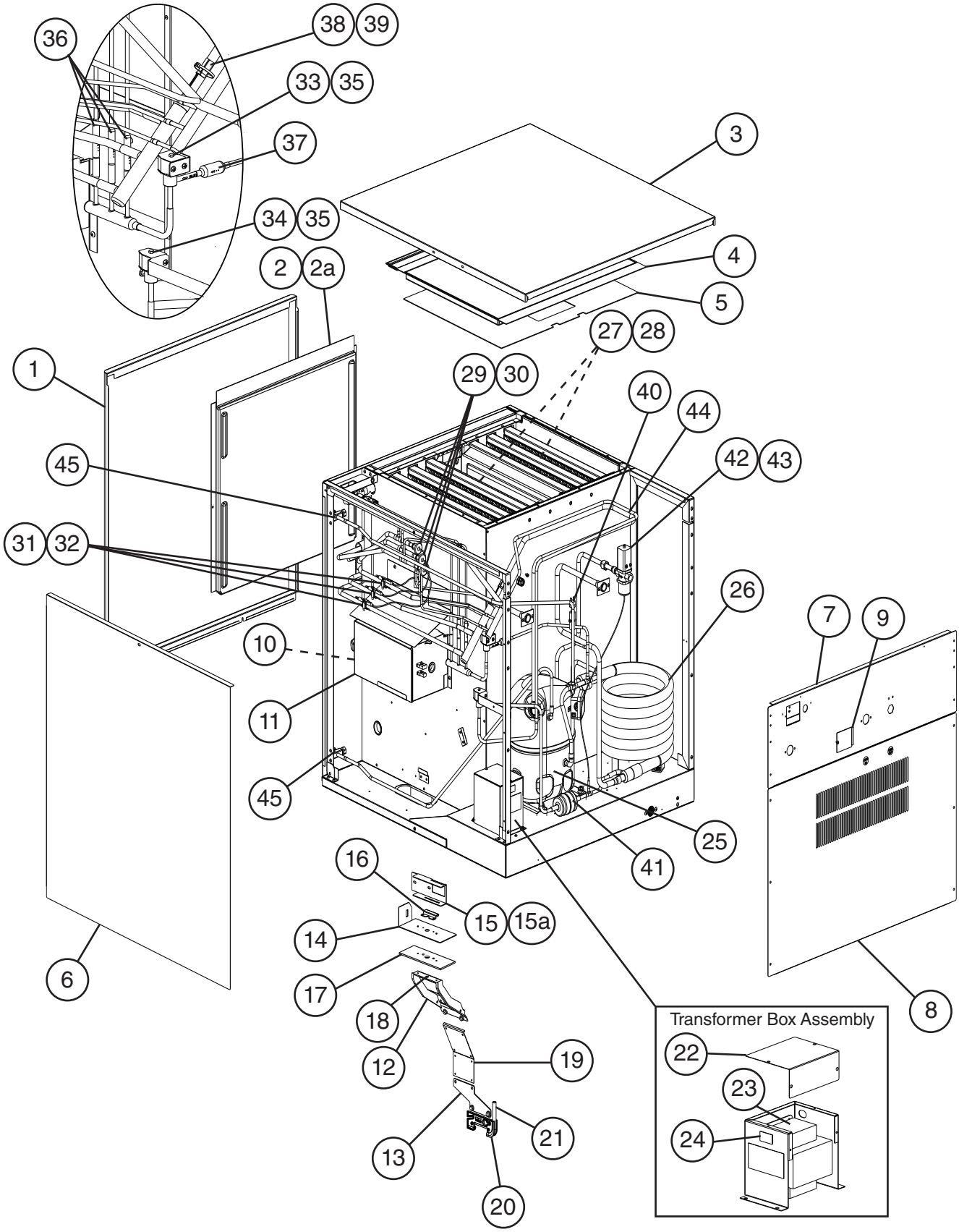

Title: A. Main Assembly & Refrigeration Circuit Model: KMH-2100SWJ3											
				Required Number							
Index No.	Description	Material or Model Number	Part Number	H-0							
Main Assembly											
1	Front Panel		2A5369-01	1							
2	Front Insulation		326041G01	1							
2a	Thumbscrew		415949G10	1							
3	Top Panel		2A5368-01	1							
4	Top Insulation		324216G01	1							
5	Spacer		324321-01	1							
6	Right Side Panel		2A5360G01	1							
7	Upper Rear Panel		3A5698-01	1							
8	Lower Rear Panel		3A5697-01	1							
9	Junction Box Cover		433410-01	1							
10	Control Box Cover A		3A5625-01	1							
11	Control Box Cover B		3A5626-01	1							
12	Bin Control Bulb Holder C		216340G01	1							
13	Bin Control Bulb Holder C (Z Bracket)		325845G01	1							
14	Bin Control Bulb Holder E		439725-01	1							
15	Bin Control Bulb Holder F		328743-01	1							
15a	Thumbscrew		415949G10	2							
16	Bin Control Bulb Holder G		439726-01	1							
17	Spacer		439727-01	1							
18	Capillary Ring		425307-02	1							
19	Thermostat Extension Bracket		3A0408-01	1							
20	Bulb Holder		3A3903-01	1							
21	Silicone Hose	L=285 mm	7730I3812	1							
22	Main Transformer Box Cover		438467-01	1							
23	Main Transformer		4A5695-01	1							
24	Voltage Tap Switch		4A1477-01	1							
Refrigeration Circuit											
25	Compressor		4A4582-01	1							
26	Condenser		3A7324-01	1							
27	Evaporator Bank (each bank includes 3 plates)		2A8347G01	2							
28	Separator Hook		324152-01	8							
29	Thermostatic Expansion Valve		4A1414-01	3							
30	Thermostatic Expansion Valve Cover		3A0944-01	3							
31	Thermostatic Expansion Valve Bulb Holder		3A0107-01	3							
32	Clamp		443461-02	3							
33	Hot Gas Valve Body		4A3978-01	1							
34	Liquid Line Valve Body		4A3276-01	1							
35	Valve Coil		4A3277-01	2							
36	Check Valve		4A1373-01	3							
37	Strainer		441569-02	1							
38	Thermistor		429006-03	1							
39	Thermistor Holder		438247-01	1							
40	High-Pressure Switch		463180-05	1							

Title: A. Main Assembly & Refrigeration Circuit Model: KMH-2100SWJ3											
				Required Number							
Index No.	Description	Material or Model Number	Part Number	H-0							
41	Drier		4A2663-01	1							
42	Water Regulating Valve		4A0911-07	1							
43	Male Connector		4A1087-01	1							
44	Heat Exchanger		2A5332G01	1							
45	Service Valve		4A3420-01	1							

A. Main Assembly & Refrigeration Circuit
KMH-2100SRJ/3

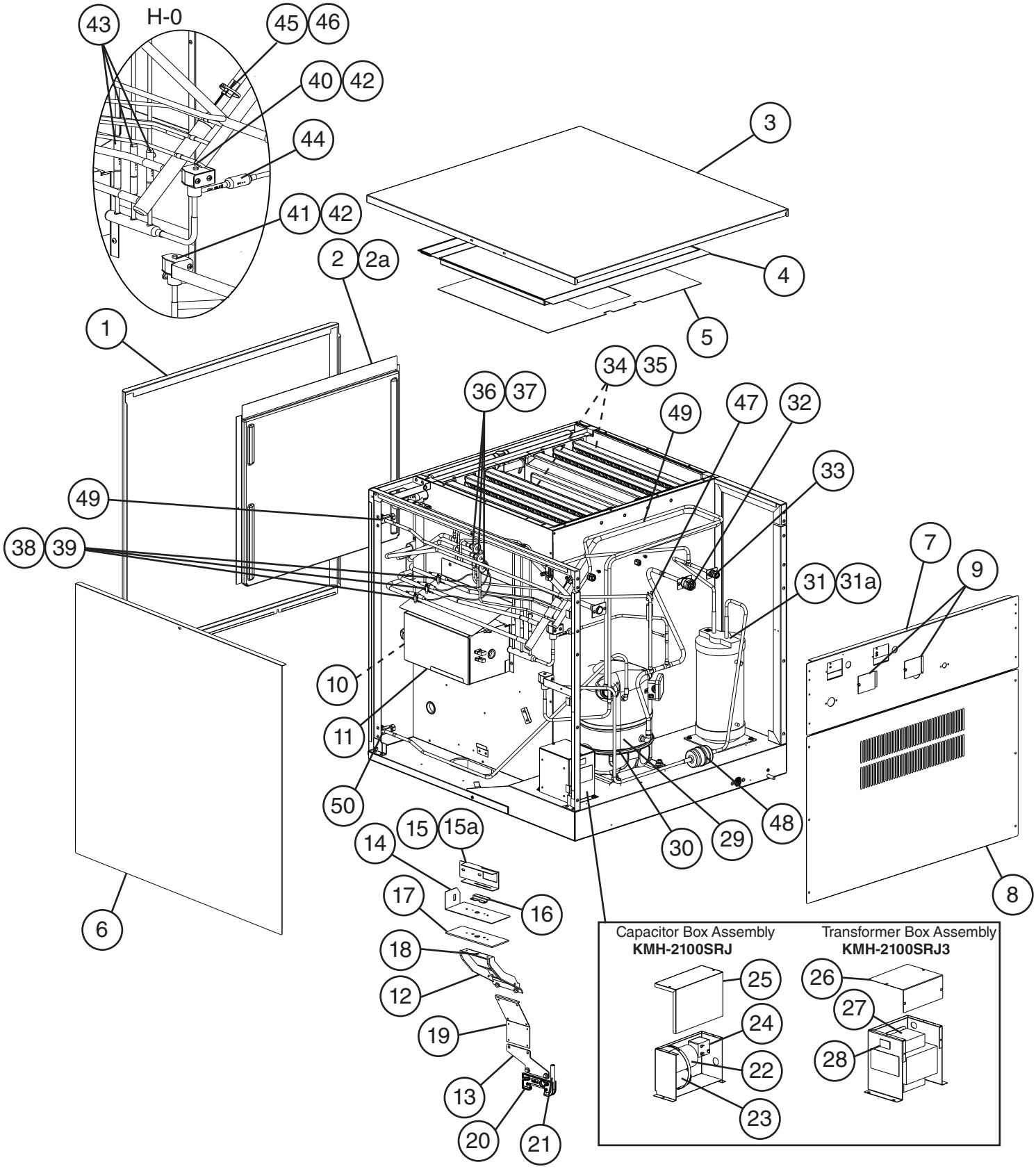

MODEL SHOWN:KMH-2100SRJ3

Title: A. Main Assembly & Refrigeration Circuit Model: KMH-2100SRJ/3											
				Required Number							
Index No.	Description	Material or Model Number	Part Number	H-0							
Main Assembly											
1	Front Panel		2A5369-01	1							
2	Front Insulation		326041G01	1							
2a	Thumbscrew		415949G10	1							
3	Top Panel		2A5368-01	1							
4	Top Insulation		324216G01	1							
5	Spacer		324321-01	1							
6	Right Side Panel		2A5360G01	1							
7	Upper Rear Panel		3A5801-01	1							
8	Lower Rear Panel		3A5697-01	1							
9	Junction Box Cover		433410-01	2							
10	Contol Box Cover A		3A5625-01	1							
11	Contol Box Cover B		3A5626-01	1							
12	Bin Control Bulb Holder C		216340G01	1							
13	Bin Control Bulb Holder C (Z Bracket)		325845G01	1							
14	Bin Control Bulb Holder E		439725-01	1							
15	Bin Control Bulb Holder F		328743-01	1							
15a	Thumbscrew		415949G10	2							
16	Bin Control Bulb Holder G		439726-01	1							
17	Spacer		439727-01	1							
18	Capillary Ring		425307-02	1							
19	Thermostat Extension Bracket		3A0408-01	1							
20	Bulb Holder		3A3903-01	1							
21	Silicone Hose	L=285 mm	7730I3812	1							
22	Start Capacitor	**KMH-2100SRJ** 189-227MFD, 330VAC	3A0076-12	1							
23	Run Capacitor	**KMH-2100SRJ** 35MFD, 440VAC	3A2005-12	1							
24	Start Relay	**KMH-2100SRJ**	4A1107-09	1							
25	Capacitor Box Cover	**KMH-2100SRJ**	326125-01	1							
26	Main Transformer Box Cover	**KMH-2100SRJ3**	438467-01	1							
27	Main Transformer	**KMH-2100SRJ3**	4A5695-01	1							
28	Voltage Tap Switch	**KMH-2100SRJ3**	4A1477-01	1							
Refrigeration Circuit											
29	Compressor	**KMH-2100SRJ**	4A4581-01	1							
		KMH-2100SRJ3	4A4582-01	1							
30	Crankcase Heater		4A5397-02	1							
31	Receiver		438209-01	1							
31a	Hex Head Bolt w/Washer	5×10	7B0130510	3							
32	Male Coupling (Discharge)		434072-01	1							
33	Male Coupling (Liquid)		426554-01	1							
34	Evaporator Bank (each bank includes 3 plates)		2A8347G01	2							
35	Separator Hook		324152-01	8							

Title: A. Main Assembly & Refrigeration Circuit Model: KMH-2100SRJ/3											
Index No.	Description	Material or Model Number	Part Number	Required Number							
				H-0							
36	Thermostatic Expansion Valve		4A1414-01	3							
37	Thermostatic Expansion Valve Cover		3A0944-01	3							
38	Thermostatic Expansion Valve Bulb Holder		3A0107-01	3							
39	Clamp		443461-02	3							
40	Hot Gas Valve Body		4A3978-01	1							
41	Liquid Line Valve Body		4A3276-01	1							
42	Valve Coil		4A3277-01	2							
43	Check Valve		4A1373-01	3							
44	Strainer		441569-02	1							
45	Thermistor		429006-03	1							
46	Thermistor Holder		438247-01	1							
47	High-Pressure Switch		463180-04	1							
48	Drier		4A2663-01	1							
49	Heat Exchanger		2A5332G01	1							
50	Service Valve		4A3420-01	1							

B. Water Circuit

KMH-2100S_J/3

H-0

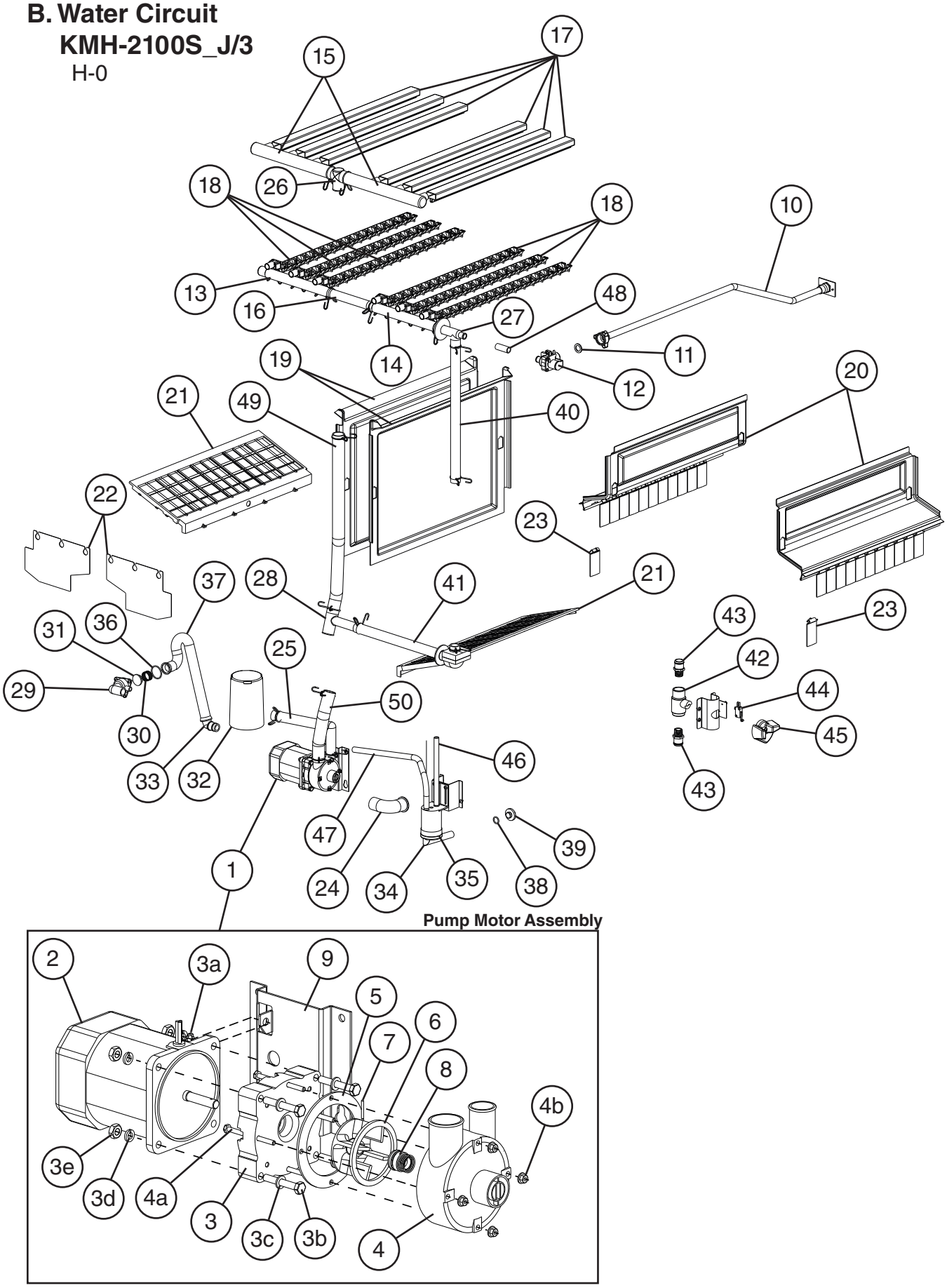

Title: B. Water Circuit Model: KMH-2100S_J/3											
Index No.	Description	Material or Model Number	Part Number	Required Number							
				H-0							
1	Pump Motor Assembly (includes items 2 through 9)	S-0730	215692A03	1							
2	Pump Motor		2U0106-01	1							
3	Pump Flange		215662-01	1							
3a	Tooth Washer		7R22-0600	2							
3b	Hex Head Bolt		7B02-0640	4							
3c	Flat Washer		7W22-0600	4							
3d	Split Lock Washer		7L22-0600	4							
3e	Hex Nut		7N12-0600	4							
4	Pump Housing		213687-01	1							
4a	Hex Head Bolt		7B02-0455	4							
4b	Hex Flange Nut		7J02-0400	4							
5	Packing		428547-01	1							
6	Impeller		436584-01	1							
7	Pin		4A0648-01	1							
8	Mechanical Seal		4A3820-01	1							
9	Pump Motor Bracket		323904-01	1							
10	Water Supply Pipe		3A5631G01	1							
11	Rubber Gasket		413854-03	1							
12	Inlet Water Valve		3U0111-01	1							
13	Distributor Hose A		325738-01	1							
14	Distributor Hose B		325738-02	1							
15	Distributor Hose C		325739-01	2							
16	Joint Pipe		439297-01	1							
17	Spray Tube		437049G01	6							
18	Spray Guide		2A4282-02	6							
19	Separator A		215046-01	2							
20	Splash Curtain		1A4890-01	2							
21	Cube Guide		214243-01	2							
22	Splash Guard		4A6029-01	2							
23	Separator		4X7933-01	12							
24	Hose A		435091-01	1							
25	Hose B		325867-01	1							
26	Distributor A		439266-01	1							
27	Distributor B (Tee)		439239-01	1							
28	Distributor C		439238-01	1							
29	Drain Valve Housing		323613-01	1							
30	Drain Valve Spring		322110-01	1							
31	Drain Valve Seat		433705-01	1							
32	Overflow Cap		325866-01	1							
33	Overflow Joint		323923-02	1							
34	Float Switch Connector		426799-04	1							
35	Float Switch		4A3624-01	1							
36	Drain Valve O-Ring		7611-G035	1							
37	Drain Hose		325869-01	1							
38	Drain Plug		309246-01	1							
39	Drain Plug O-Ring		7611-P015	1							

Title: B. Water Circuit Model: KMH-2100S_J/3											
Index No.	Description	Material or Model Number	Part Number	Required Number							
				H-0							
40	Joint Hose		439309-01	1							
41	Bypass Hose		439237-02	1							
42	Cleaning Valve Ball Valve		439293-01	1							
43	Cleaning Valve Male Adaptor		325826-01	2							
44	Cleaning Valve Microswitch		4A2546-01	1							
45	Cleaning Valve Handle		215383-01	1							
46	Silicone Hose	L=190 mm	7730I3812	1							
47	Silicone Hose	L=430 mm	7730I3896	1							
48	Vinyl Hose	L=40 mm	7716-1216	1							
49	Vinyl Hose	L=550 mm	7716-2732	1							
50	Vinyl Hose	L=230 mm	7716-2732	1							
Hose Clamps											
	Hose Clamp	25 mm, SS	427443-03	9							
	Hose Clamp	13.5 mm, SS	427443-07	6							
	Hose Clamp	32 mm, SS	427443-09	6							

C. Control Box Assembly
KMH-2100S_J/3
H-0

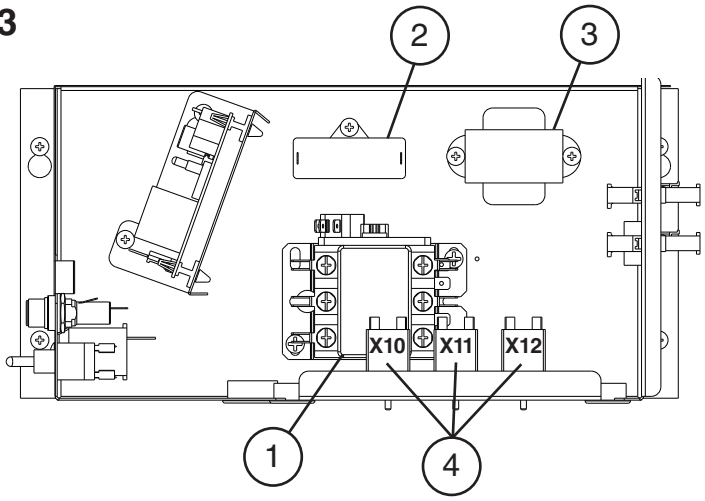

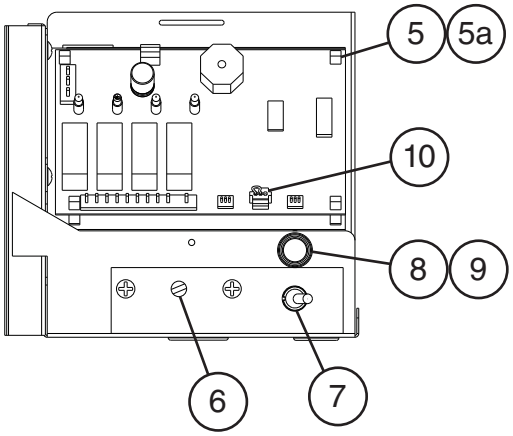

Title: C. Control Box Assembly Model: KMH-2100S_J/3											
				Required Number							
Index No.	Description	Material or Model Number	Part Number	H-0							
1	Magnetic Contactor	**KMH-2100SWJ3**	4A0794-02	1							
		KMH-2100SRJ/3	4A0794-01	1							
2	Pump Motor Capacitor	15MFD, 240VAC	439705-01	1							
3	Control Transformer		3A0172-01	1							
4	Relay X10 = Pump Direction Relay X11 = X10 Control Relay X12 = Slush Control Relay		406132-07	3							
5	Control Board		2A7664-02	1							
5a	Control Board Support		4A0336-03	4							
6	Bin Control Thermostat		4A2879-02	1							
7	Control Switch		443119-01	1							
8	Fuse Holder		4A5443-01	1							
9	Fuse	AGC-10A, 250VAC	4A0893-07	1							
10	Jumper Connector		4A4883G01	1							

D. Accesories & Labels
KMH-2100S_J/3
H-0

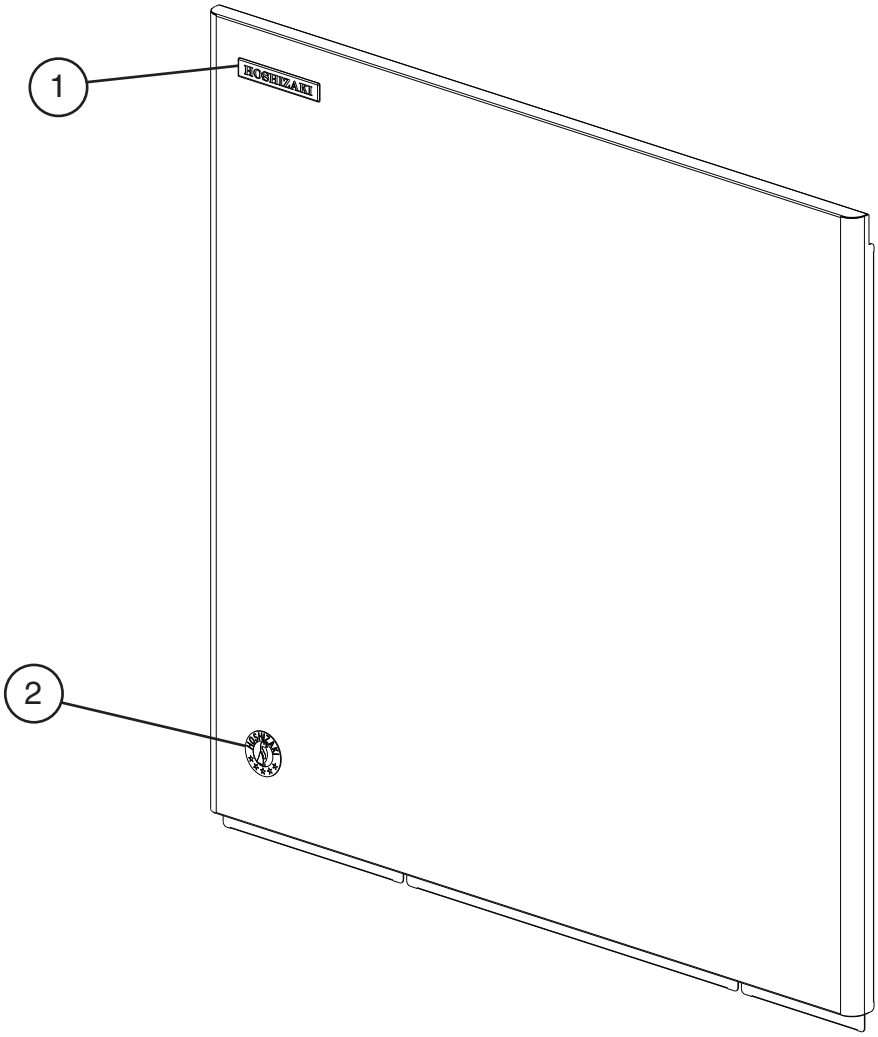

Title: D. Accesories & Labels Model: KMH-2100S_J/3											
				Required Number							
Index No.	Description	Material or Model Number	Part Number	H-0							
1	Hoshizaki Label		4A0560-01	1							
2	Penguin Label		475552L02	1							
3	Universal Brace		4A0363-01	2							
3a	Hex Bolt	5×12, SS	7B02-0512	2							