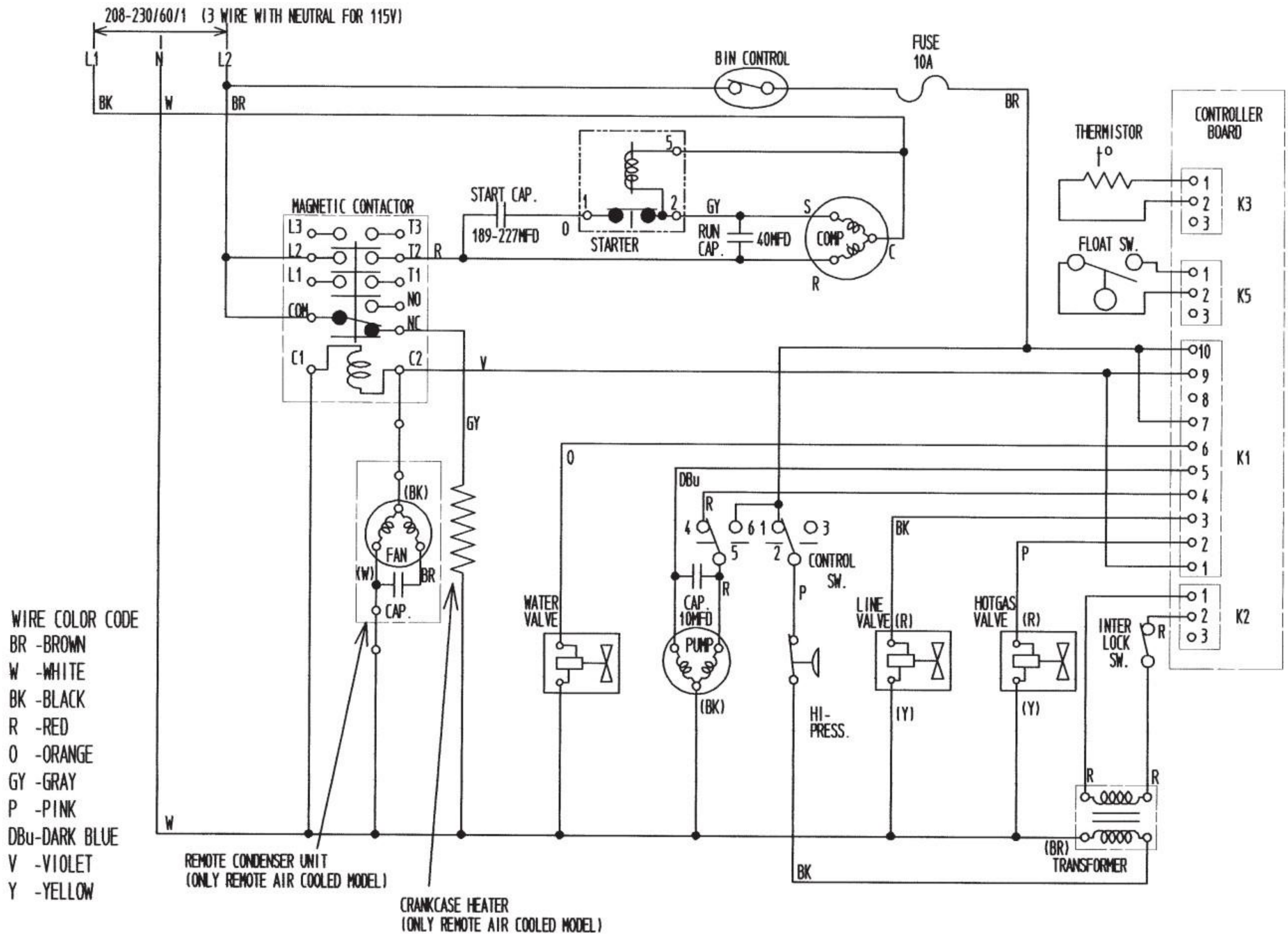
208-230/60/1 (3 WIRE WITH NEUTRAL FOR 115V)
L1
N
L2
BK
W
BR
BIN CONTROL
FUSE
10A
BR
CONTROLLER BOARD
THERMISTOR
K3
FLOAT SW.
K5
K1
K2
MAGNETIC CONTACTOR
L3
L2
L1
COM
T3
T2
T1
NO
NC
C1
C2
START CAP.
189-227MFD
R
O
STARTER
GY
RUN CAP.
40MFD
S
COMP
C
R
V
GY
(BK)
FAN
(W)
BR
CAP.
O
DBu
R
CAP. 10MFD
PUMP
(BK)
WATER VALVE
CONTROL SW.
P
HI-PRESS.
LINE VALVE (R)
(Y)
BK
HOTGAS VALVE (R)
(Y)
P
INTER LOCK SW.
R
R
R
(BR)
TRANSFORMER
BK
W
WIRE COLOR CODE
BR -BROWN
W -WHITE
BK -BLACK
R -RED
O -ORANGE
GY -GRAY
P -PINK
DBu-DARK BLUE
V -VIOLET
Y -YELLOW
REMOTE CONDENSER UNIT
(ONLY REMOTE AIR COOLED MODEL)
CRANKCASE HEATER
(ONLY REMOTE AIR COOLED MODEL)

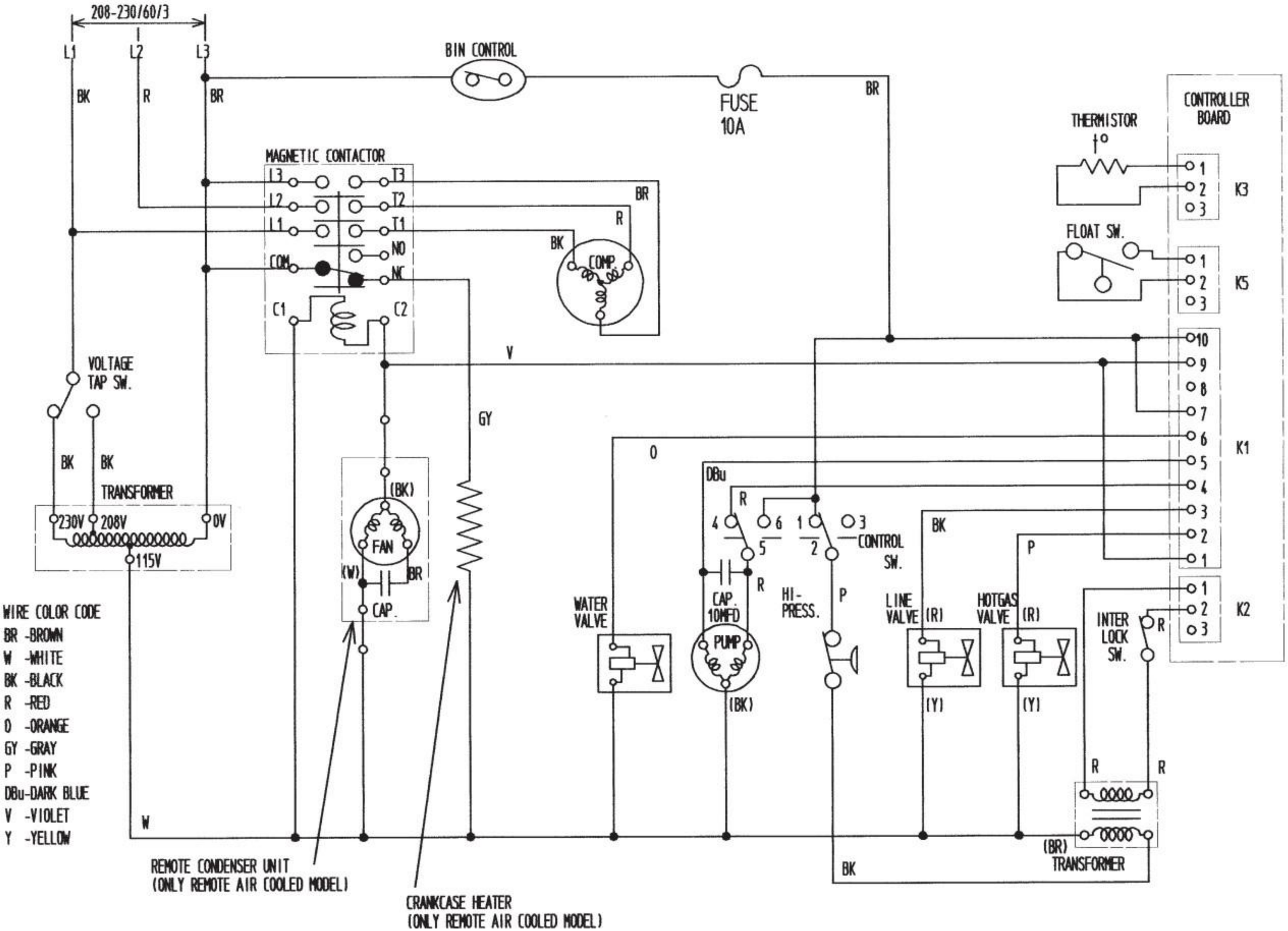
208-230/60/3
L1
L2
L3
BK
R
BR
BIN CONTROL
FUSE
10A
BR
CONTROLLER
BOARD
THERMISTOR
MAGNETIC CONTACTOR
L3
L2
L1
COM
T3
T2
T1
NO
NC
C1
C2
BR
R
BK
COMP.
K3
FLOAT SW.
K5
V
VOLTAGE
TAP SW.
GY
10
9
8
7
6
5
4
3
2
1
K1
BK
BK
TRANSFORMER
230V
208V
0V
115V
(BK)
FAN
(W)
BR
CAP.
O
DBu
R
4
6
1
3
5
2
CONTROL
SW.
BK
P
R
CAP.
10MFD
HI-
PRESS.
P
WATER
VALVE
PUMP
(BK)
LINE
VALVE
(R)
(Y)
HOTGAS
VALVE
(R)
(Y)
INTER
LOCK
SW.
R
1
2
3
K2
WIRE COLOR CODE
BR -BROWN
W -WHITE
BK -BLACK
R -RED
O -ORANGE
GY -GRAY
P -PINK
DBu-DARK BLUE
V -VIOLET
Y -YELLOW
W
R
R
(BR)
TRANSFORMER
BK
REMOTE CONDENSER UNIT
(ONLY REMOTE AIR COOLED MODEL)
CRANKCASE HEATER
(ONLY REMOTE AIR COOLED MODEL)