S4 DIP SWITCH SETTINGS										
MODEL	1	2	3	4	5	6	7	8	9	10
KM-520MAJ-E	ON	ON	OFF	OFF	ON	OFF	ON	OFF	ON	ON
KM-660MAJ-E	OFF	OFF	OFF	OFF	OFF	OFF	ON	OFF	ON	ON

S5 DIP SWITCH SETTINGS					
MODEL	1	2	3	4	5
KM-520MAJ-E	OFF				ON
KM-620MAJ-E					

WIRE COLOR CODE
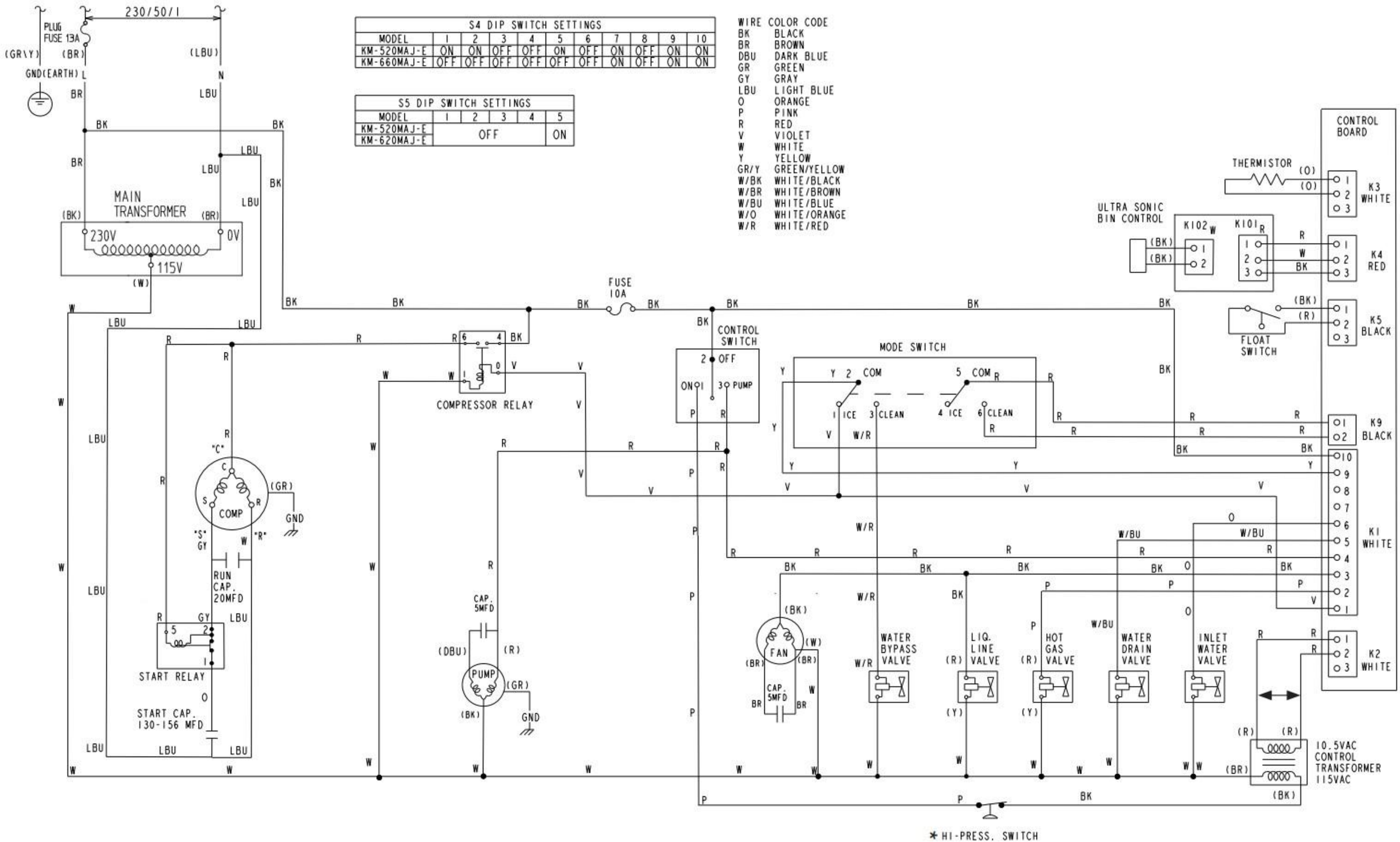
BK	BLACK
BR	BROWN
DBU	DARK BLUE
GR	GREEN
GY	GRAY
LBU	LIGHT BLUE
O	ORANGE
P	PINK
R	RED
V	VIOLET
W	WHITE
Y	YELLOW
GR/Y	GREEN/YELLOW
W/BK	WHITE/BLACK
W/BR	WHITE/BROWN
W/BU	WHITE/BLUE
W/O	WHITE/ORANGE
W/R	WHITE/RED