HOSHIZAKI

Parts List

Stackable Crescent Cuber

Models
KM-2100SWJ3
KM-2100SRJ3

hoshizakiamerica.com

Number: 71368
Issued: 3-10-2016
Revised: 9-12-2019

CONTENTS

Auxiliary Codes 3
Note About Ordering Parts 3
A. Ice Cuber Assembly & Refrigeration Circuit 4
KM-2100SWJ3 4
KM-2100SRJ3 6
B. Water Circuit 8
C. Control Box Assembly 11
D. Accessories & Labels 12

Auxiliary Codes

KM-2100SWJ3
E-0 September 2015
F-0 January 2016
G-0 January 2017

KM-2100SRJ3
E-0 August 2015
F-0 January 2016
G-0 January 2017

Auxiliary Code Breakdown

The auxiliary code is the first two characters in the serial number. The first character indicates the year. Years progress or regress in alphabetical order. The series runs from "A" through "V" and the letters "I" and "O" are skipped. The second character indicates significant part changes within a year. Base is "0" and this number advances for each change. In cases where there is a letter in parentheses, this designates the month. This is the last character in the serial number. The series runs from "(A)" through "(M)" and the letter "(I)" is skipped. This designation is only included when identifying a parts change within an auxiliary code.

Note About Ordering Parts

Most assemblies cannot be ordered as complete units; parts in the assemblies generally must be ordered separately.

A. Ice Cuber Assembly & Refrigeration Circuit

KM-2100SWJ3

E-0 to G-0

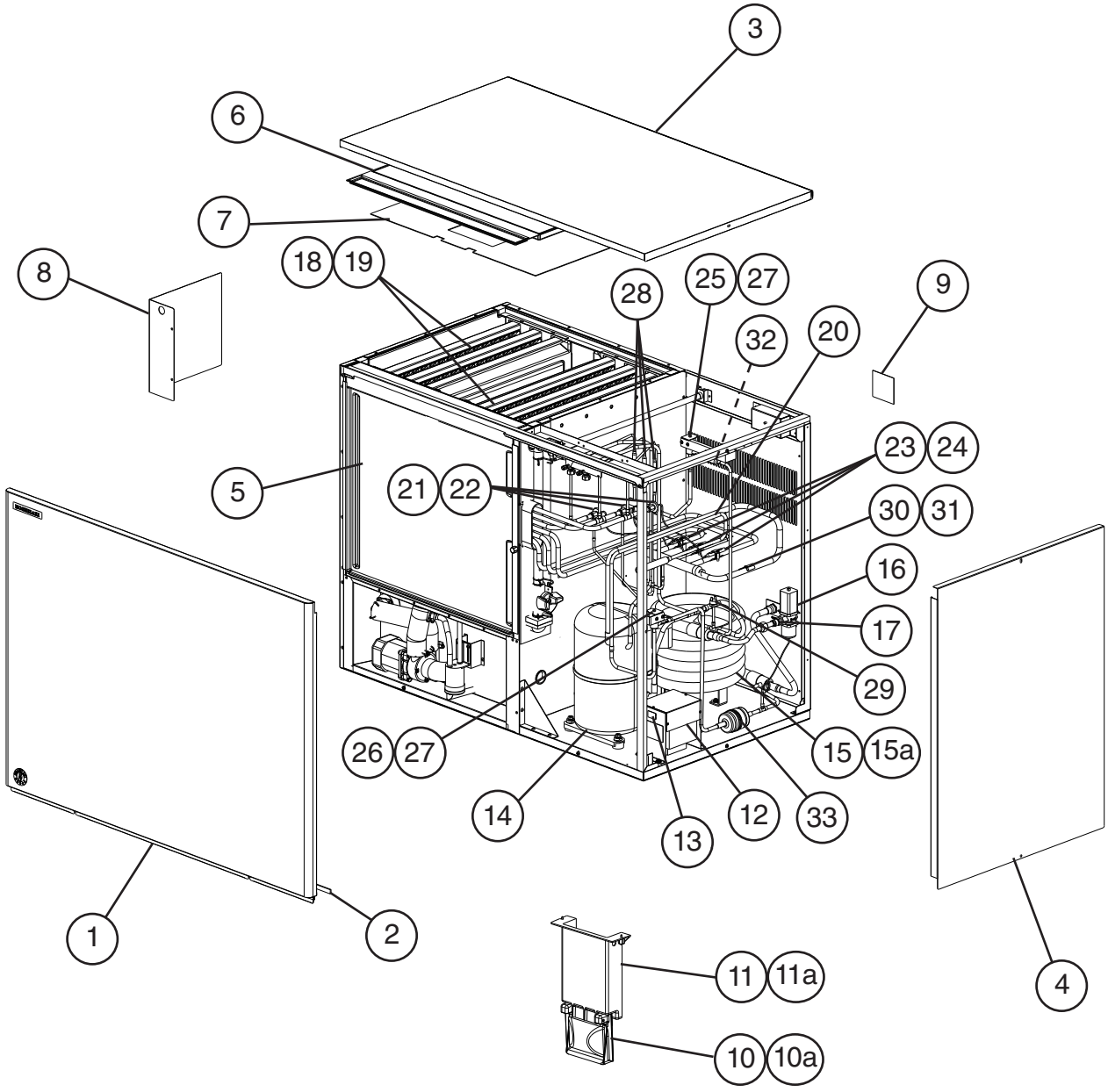

Title: A. Ice Cuber Assembly & Refrigeration Circuit Model: KM-2100SWJ3													
Index No.	Description	Material or Model Number	Part Number	Required Number E-0 to G-0									
Ice Cuber Assembly													
1	Front Panel		3A1838G01	1									
2	Gasket		4A0808L02	1									
3	Top Panel		2A2255-01	1									
4	Right Side Panel		215381G02	1									
5	Front Insulation		326041G01	1									
6	Top Insulation		324216G01	1									
7	Spacer		324321-01	1									
8	Control Box Cover		3A2386-01	1									
9	Junction Box Cover		433410-01	1									
10	Mechanical Bin Control		2A4393G01	1									
10a	Thumbscrews		415949G12	2									
11	Bin Control Mounting Bracket		3A5726-01	1									
11a	Thumbscrews		415949G12	2									
12	Main Transformer		4A0817-01	1									
13	Voltage Tap Switch		4A1477-01	1									
Refrigeration Circuit													
14	Compressor		4A4891-01	1									
15	Condenser		3A7324-01	1									
15a	Hex Head Bolt w/Washer	5×12	7B0130512	3									
16	Water Regulating Valve		4A0911-07	1									
17	Male Connector		4A1087-01	1									
18	Evaporator Bank (includes 4 of item 19)		SP-5368	2									
19	Seperator Hook		324152-01	8									
20	Heat Exchanger		2A4994G01	1									
21	Thermostatic Expansion Valve		4A4008-01	3									
22	Thermostatic Expansion Valve Cover		3A0944-01	3									
23	Thermostatic Expansion Valve Bulb Holder		3A0107-01	3									
24	Clamp		443461-02	3									
25	Hot Gas Valve Body		4A3978-01	1									
26	Liquid Line Valve Body		4A3276-01	1									
27	Valve Coil		4A3277-01	2									
28	Check Valve		4A1373-01	3									
29	High-Pressure Switch		463180-05	1									
30	Thermistor		429006-03	1									
31	Thermistor Holder		438247-01	1									
32	Strainer		441569-02	1									
33	Drier		4A2663-01	1									

A. Ice Cuber Assembly & Refrigeration Circuit

KM-2100SRJ3

E-0 to G-0

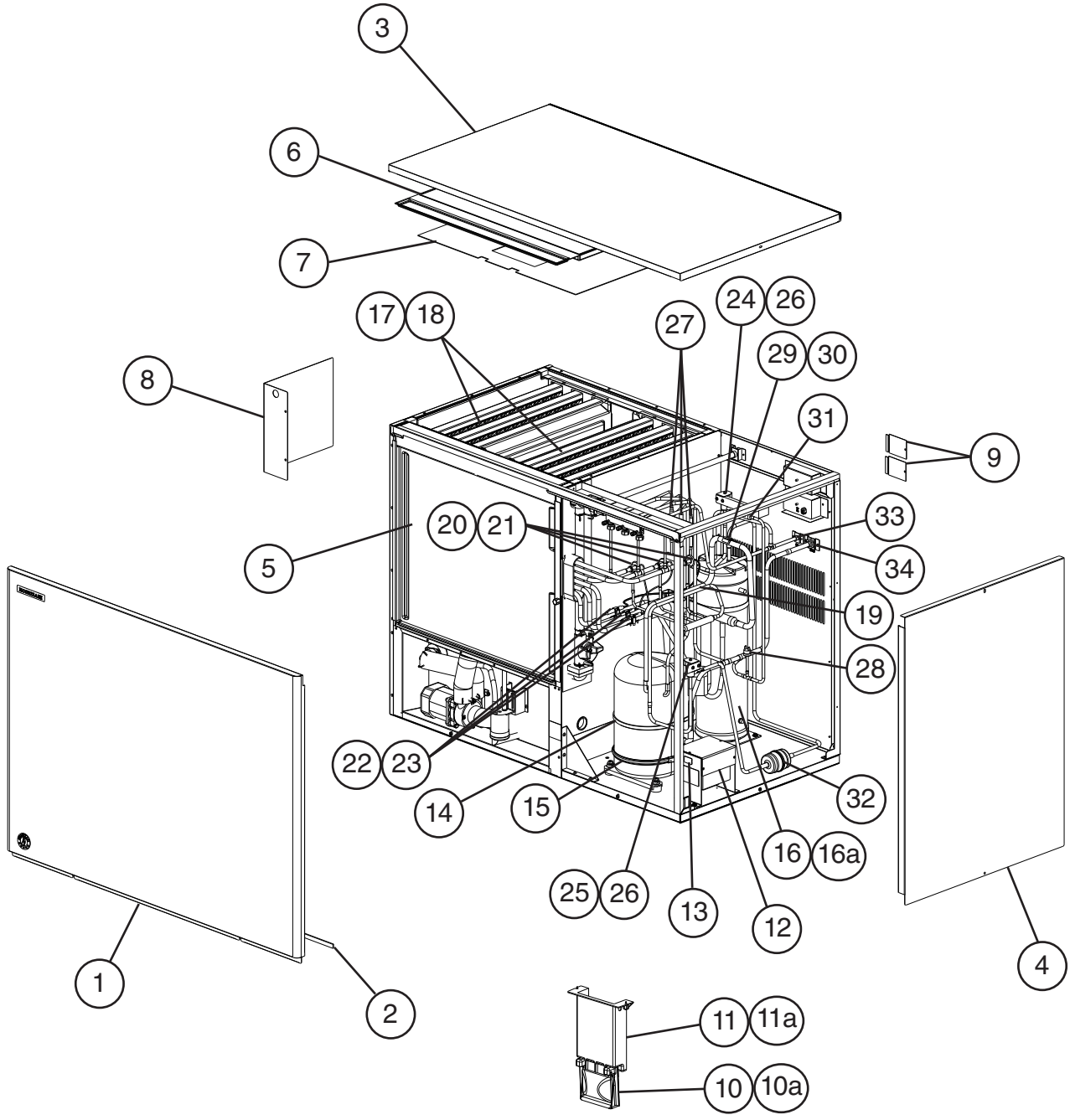

Title: A. Ice Cuber Assembly & Refrigeration Circuit Model: KM-2100SRJ3												
Index No.	Description	Material or Model Number	Part Number	Required Number E-0 to G-0								
Ice Cuber Assembly												
1	Front Panel		3A1838G01	1								
2	Gasket		4A0808L02	1								
3	Top Panel		2A2255-01	1								
4	Right Side Panel		215381G02	1								
5	Front Insulation		326041G01	1								
6	Top Insulation		324216G01	1								
7	Spacer		324321-01	1								
8	Control Box Cover		3A2386-01	1								
9	Junction Box Cover		433410-01	2								
10	Mechanical Bin Control		2A4393G01	1								
10a	Thumbscrews		415949G12	2								
11	Bin Control Mounting Bracket		3A5726-01	1								
11a	Thumbscrews		415949G12	2								
12	Main Transformer		4A5695-01	1								
13	Voltage Tap Switch		4A1477-01	1								
Refrigeration Circuit												
14	Compressor		4A4891-01	1								
15	Crankcase Heater		4A5397-02	1								
16	Receiver		4A6215-01	1								
16a	Hex Head Bolt w/Washer	5×10	7B0130510	3								
17	Evaporator Bank (includes 4 of item 18)		SP-5368	2								
18	Seperator Hook		324152-01	8								
19	Heat Exchanger		2A4785G01	1								
20	Thermostatic Expansion Valve		4A4008-01	3								
21	Thermostatic Expansion Valve Cover		3A0944-01	3								
22	Thermostatic Expansion Valve Bulb Holder		3A0107-01	3								
23	Clamp		443461-02	3								
24	Hot Gas Valve Body		4A3978-01	1								
25	Liquid Line Valve Body		4A3276-01	1								
26	Valve Coil		4A3277-01	2								
27	Check Valve		4A1373-01	3								
28	High-Pressure Switch		463180-04	1								
29	Thermistor		429006-03	1								
30	Thermistor Holder		438247-01	1								
31	Strainer		441569-02	1								
32	Drier		4A2663-01	1								
33	Liquid Line Coupling		426554-01	1								
34	Discharge Line Coupling		434072-01	1								

B. Water Circuit

KM-2100SWJ3, KM-2100SRJ3

E-0 to G-0

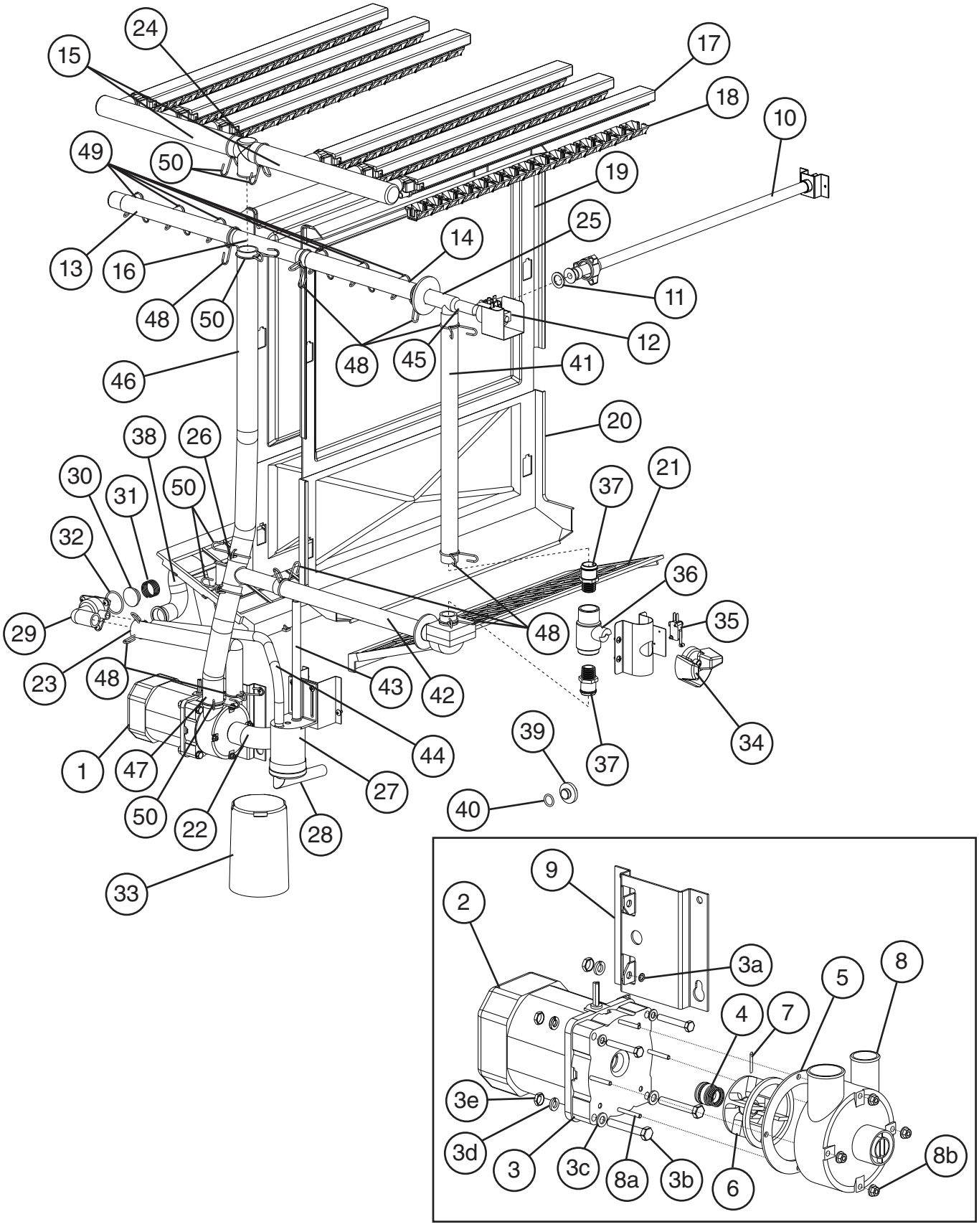

Title: B. Water Circuit Model: KM-2100SWJ3, KM-2100SRJ3													
Index No.	Description	Material or Model Number	Part Number	Required Number									
				E-0 to G-0									
1	Pump Motor Assembly (includes items 2 through 8)	S-0730	215692A03	1									
2	Pump Motor		2U0106-01	1									
3	Pump Flange		215662-01	1									
3a	Tooth Washer		7R22-0600	2									
3b	Hex Head Bolt	6×40	7B02-0640	4									
3c	Flat Washer		7W22-0600	4									
3d	Split Lock Washer		7L22-0600	4									
3e	Hex Nut		7N12-0600	4									
4	Mechanical Seal		4A3820-01	1									
5	Packing		428547-01	1									
6	Impeller		436584-01	1									
7	Pin		4A0648-01	1									
8	Pump Housing		213687-01	1									
8a	Hex Head Bolt	4×55	7B02-0455	4									
8b	Hex Flange Nut		7J02-0400	4									
9	Pump Motor Bracket		323904-01	1									
10	Water Supply Pipe		4A0768G04	1									
11	Rubber Gasket		413854-03	1									
12	Inlet Water Valve		3U0111-01	1									
13	Distributor Hose A		325738-01	1									
14	Distributor Hose B		325738-02	1									
15	Distributor Hose C		325739-01	2									
16	Joint Pipe		439297-01	1									
17	Spray Tube		437049G01	6									
18	Spray Guide		2A4282-02	6									
19	Separator A		215046-01	2									
20	Separator B		2A0100-01	2									
21	Cube Guide		214243-01	2									
22	Hose A		435091-01	1									
23	Hose B		325867-01	1									
24	Distributor A (Tee)		439266-01	1									
25	Distributor B (Tee)		439239-01	1									
26	Distributor C (Tee)		439238-01	1									
27	Float Switch		4A3624-01	1									
28	Float Switch Connector		426799-04	1									
29	Drain Valve Housing		323613-01	1									
30	Drain Valve Seat		433705-01	1									
31	Drain Valve Spring		322110-01	1									
32	Drain Valve O-Ring		7611-G035	1									
33	Overflow Cap		325866-01	1									
34	Cleaning Valve Handle		215383-01	1									
35	Cleaning Valve Microswitch		4A2546-01	1									
36	Cleaning Valve Ball Valve		439293-01	1									
37	Cleaning Valve Male Adaptor		325826-01	2									
38	Drain Hose		325869-01	1									
39	Drain Plug		309246-01	1									

Title: B. Water Circuit Model: KM-2100SWJ3, KM-2100SRJ3													
Index No.	Description	Material or Model Number	Part Number	Required Number									
				E-0 to G-0									
40	Drain Plug O-Ring		7611-P015	1									
41	Joint Hose		439309-01	1									
42	Bypass Hose		439237-02	1									
43	Silicone Hose	L= 190	7730I3812	1									
44	Silicone Hose	L= 430	7730I3896	1									
45	Vinyl Hose	L= 40	7716-1519	1									
46	Vinyl Hose	L= 550	7716-2732	1									
47	Vinyl Hose	L= 230	7716-2732	1									
48	Hose Clamp	25 mm	427443-03	9									
49	Hose Clamp	13.5 mm	427443-07	6									
50	Hose Clamp	32 mm	427443-09	6									

C. Control Box Assembly
KM-2100SWJ3, KM-2100SRJ3
E-0 to G-0

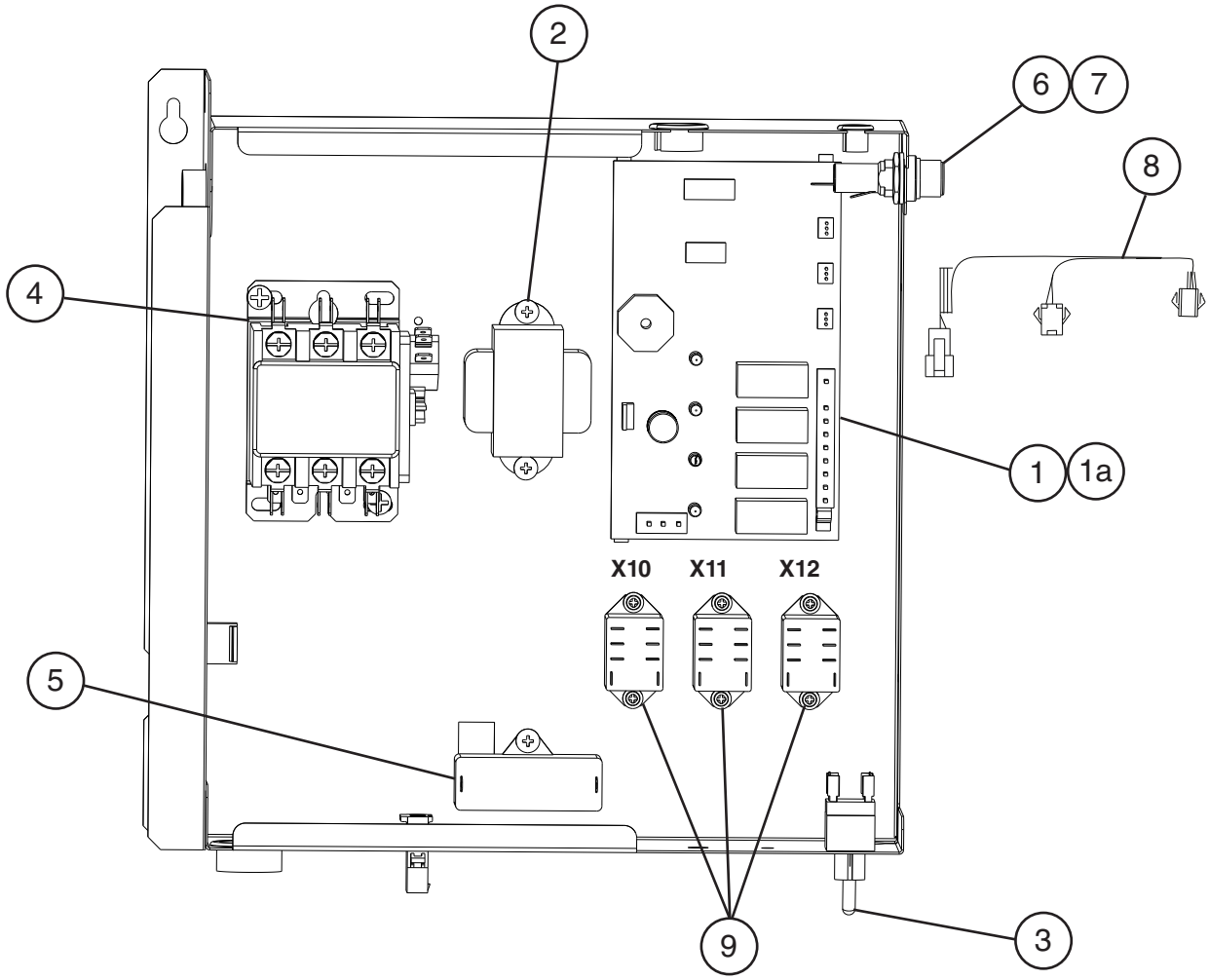

Title: C. Control Box Assembly Model: KM-2100SWJ3, KM-2100SRJ3													
Index No.	Description	Material or Model Number	Part Number	Required Number									
				E-0 to G-0									
1	Control Board		2A7664-04	1									
1a	Control Board Support		4A0336-03	4									
2	Control Transformer		3A0172-01	1									
3	Control Switch		443119-01	1									
4	Magnetic Contactor	**KM-2100SWJ3**	4A0794-02	1									
		KM-2100SRJ3	4A0794-01	1									
5	Pump Motor Capacitor	10MFD, 250VAC	4A6435-01	1									
6	Fuse Holder		4A5443-01	1									
7	Fuse	ACG-10A 250VAC	4A0893-07	1									
8	Bin Control Wire Harness		4A5197G01	1									
9	Relay X10 = Pump Direction Relay X11 = X10 Control Relay X12 = Anti-Slush Control Relay		406132-07	3									

D. Accessories & Labels
KM-2100SWJ3, KM-2100SRJ3
E-0 to G-0

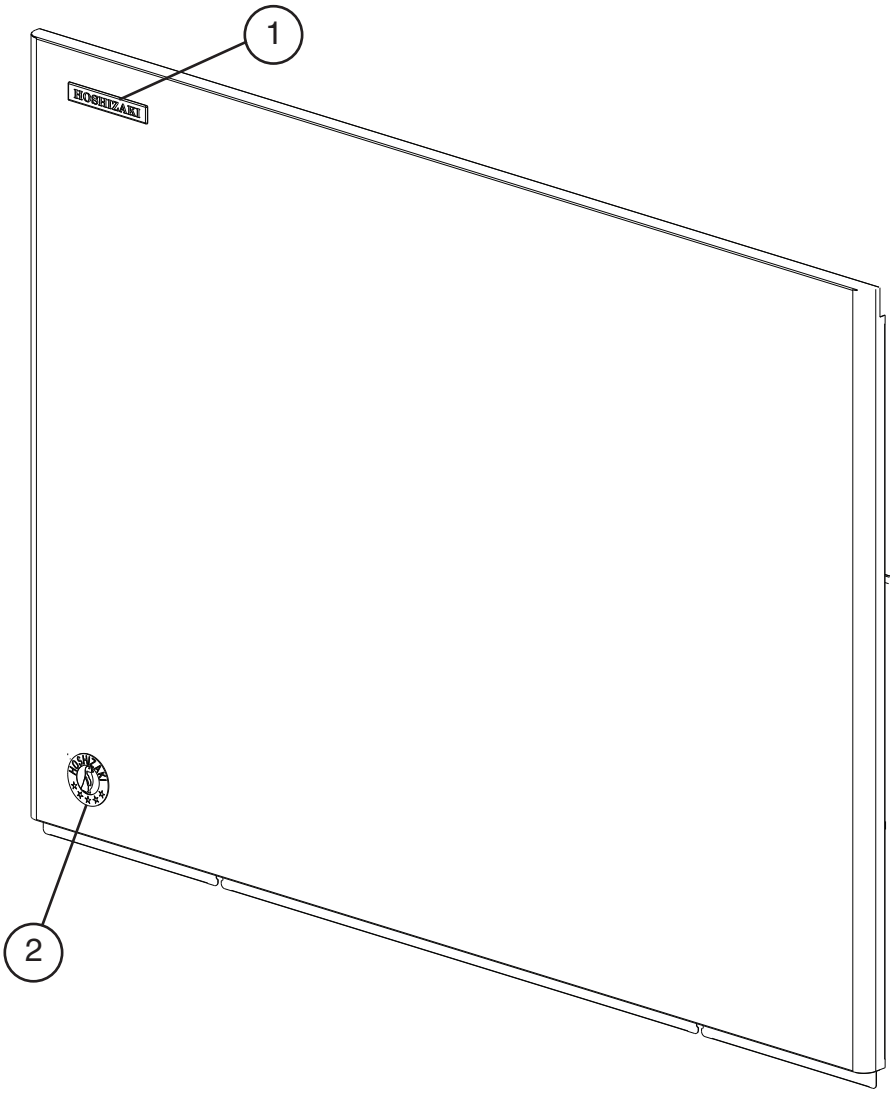

Title: D. Accessories & Labels Model: KM-2100SWJ3, KM-2100SRJ3													
				Required Number									
Index No.	Description	Material or Model Number	Part Number	E-0 to G-0									
1	Hoshizaki Emblem		4A0560-01	1									
2	Penguin Label		475552L02	1									
3	Universal Brace		4A0363-01	2									
4	Hex Head Bolt	5×12	7B02-0512	4									
5	Thumbscrews		415949G12	1									