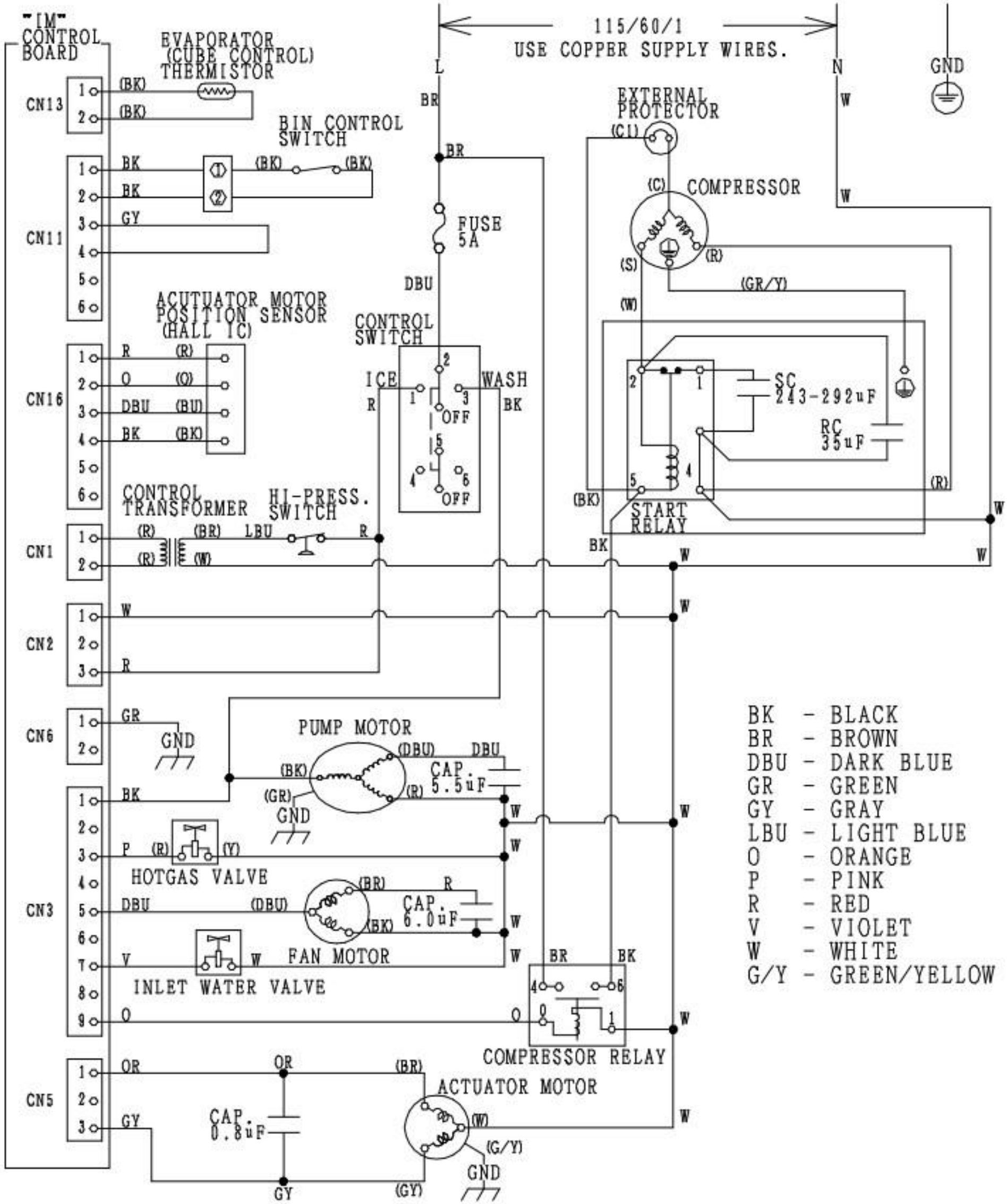
"IM" CONTROL BOARD
EVAPORATOR (CUBE CONTROL) THERMISTOR
115/60/1
USE COPPER SUPPLY WIRES.
L
N
GND
BIN CONTROL SWITCH
EXTERNAL PROTECTOR
COMPRESSOR
FUSE 5A
ACUTUATOR MOTOR POSITION SENSOR (HALL IC)
CONTROL SWITCH
ICE
WASH
OFF
SC 243-292uF
RC 35uF
START RELAY
CONTROL TRANSFORMER
HI-PRESS. SWITCH
PUMP MOTOR
CAP. 5.5uF
HOTGAS VALVE
CAP. 6.0uF
FAN MOTOR
INLET WATER VALVE
COMPRESSOR RELAY
ACTUATOR MOTOR
CAP. 0.8uF
CN13
CN11
CN16
CN1
CN2
CN6
CN3
CN5
BK - BLACK
BR - BROWN
DBU - DARK BLUE
GR - GREEN
GY - GRAY
LBU - LIGHT BLUE
O - ORANGE
P - PINK
R - RED
V - VIOLET
W - WHITE
G/Y - GREEN/YELLOW