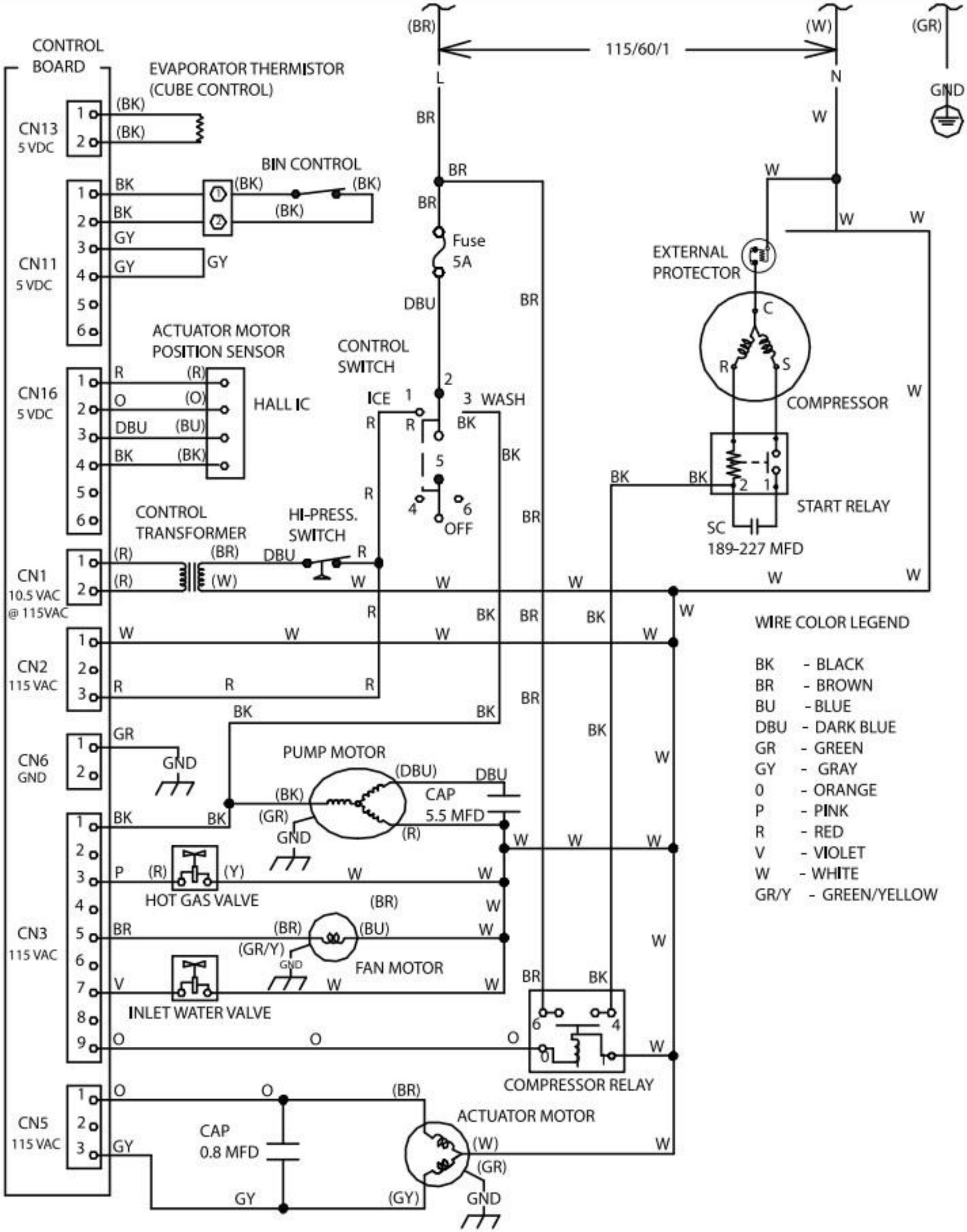
CONTROL BOARD
EVAPORATOR THERMISTOR (CUBE CONTROL)
CN13
5 VDC
BIN CONTROL
CN11
5 VDC
ACTUATOR MOTOR POSITION SENSOR
CN16
5 VDC
HALL IC
CONTROL SWITCH
ICE
WASH
OFF
CONTROL TRANSFORMER
HI-PRESS. SWITCH
CN1
10.5 VAC @ 115VAC
CN2
115 VAC
CN6
GND
PUMP MOTOR
CAP 5.5 MFD
HOT GAS VALVE
CN3
115 VAC
FAN MOTOR
INLET WATER VALVE
CN5
115 VAC
CAP 0.8 MFD
ACTUATOR MOTOR
115/60/1
L
N
GND
Fuse 5A
EXTERNAL PROTECTOR
COMPRESSOR
START RELAY
SC
189-227 MFD
COMPRESSOR RELAY
WIRE COLOR LEGEND
BK - BLACK
BR - BROWN
BU - BLUE
DBU - DARK BLUE
GR - GREEN
GY - GRAY
0 - ORANGE
P - PINK
R - RED
V - VIOLET
W - WHITE
GR/Y - GREEN/YELLOW