HOSHIZAKI

Parts List

Modular Flaker
Serenity Series

FS-1001MLH-C

hoshizakiamerica.com

Number: 71233
Issued: 5-23-2005
Revised: 5-17-2017

CONTENTS

Auxiliary Codes 3
Note About Ordering Parts 3
A. Main Assembly & Refrigeration Circuit 4
B. Icemaking Unit 7
C. Water Circuit 9
D. Control Box Assembly 11
E. Accessories & Labels 13

Auxiliary Codes

FS-1001MLH-C

P-0	July 2004
Q-0	July 2005
S-0	February 2007
T-0	April 2008
T-1	October 2008
U-0	January 2009
U-1	December 2009
V-0	January 2010
V-1	February 2010
V-2	October 2010
V-3	November 2010
A-0	January 2011
B-0	January 2012
B-1	November 2012
C-0	January 2013
D-0	January 2014
D-1	September 2014
E-0	April 2015
F-0	February 2016
F-1	May 2016
G-0	February 2017

Auxiliary Code Breakdown

The auxiliary code is the first two characters in the serial number. The first character indicates the year. Years progress or regress in alphabetical order. The series runs from "A" through "V" and the letters "I" and "O" are skipped. The second character indicates significant part changes within a year. Base is "0" and this number advances for each change. In cases where there is a letter in parentheses, this designates the month. This is the last character in the serial number. The series runs from "(A)" through "(M)" and the letter "(I)" is skipped. This designation is only included when identifying a parts change within an auxiliary code.

Note About Ordering Parts

Most assemblies cannot be ordered as complete units; parts in the assemblies generally must be ordered separately.

A. Main Assembly & Refrigeration Circuit

FS-1001MLH-C

P-0 to G-0

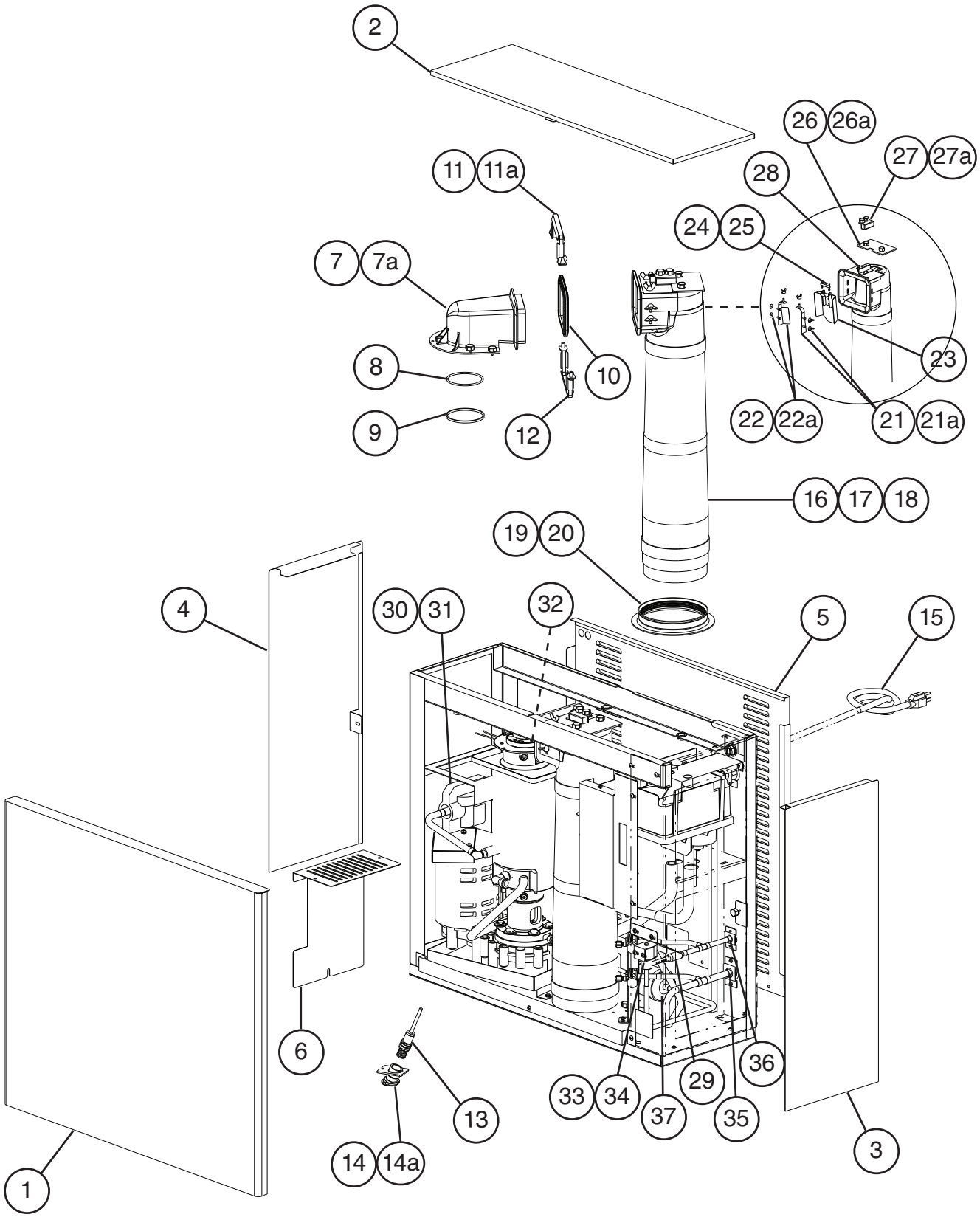

Title: A. Main Assembly & Refrigeration Circuit Model: FS-1001MLH-C													
Index No.	Description	Material or Model Number	Part Number	Required Number									
				P-0 (G) to P-0 (L)	P-0 (M) to U-0	U-1 to G-0							
Main Assembly													
1	Front Panel		2A3145-01	1	1	1							
2	Top Panel		2A3140-01	1	1	1							
3	Right Side Panel		3A3328G01	1	1	1							
4	Left Side Panel		3A3329G01	1	1	1							
5	Rear Panel		1A2762-01	1	1	1							
6	Control Box Cover		4A3675-01	1	1	1							
7	Spout		104797-01	1	1	1							
7a	Thumbscrew		415949G08	3	3	3							
8	O-Ring		4A4755-03	1	1	1							
9	Nylon Ring		432661-02	1	1	1							
10	Spout-to-Chute Packing		321037-01	1	1	1							
11	Upper Strap		328703-02	1	1	1							
11a	Wing Nut	6, SS	7E12-0600	2	2	2							
12	Lower Strap		321038G02	1	1	1							
13	Bin Control 1 (infrared sensor)		4A3773-01	1	1	-							
			4A4469-01			1							
14	Bin Control 1 Housing (infrared sensor)		3A3478-01	1	1	1							
14a	Thumbscrew		415949G10	1	1	1							
15	Power Cord		4A1773-01	1	1	1							
16	Chute		2A1919-01	1	1	1							
17	Chute Insulation		2A1920-01	1	1	1							
18	Chute Tie		436531G01	1	1	1							
19	Chute Packing		432877-01	1	1	1							
20	Ring		3A1017-01	1	1	1							
21	Chute Baffle A		3A0400G01	1	1	1							
21a	Wing Nut	4, SS	7E12-0400	3	3	3							
22	Chute Baffle B		3A0399G01	1	1	1							
22a	Wing Nut	4, SS	7E12-0400	3	3	3							
23	Actuator		436848G01	1	1	1							
24	Shaft		436851-01	1	1	1							
25	Snap Pin		715S-0005	2	2	2							
26	Plate		4A2039-01	1	1	1							
26a	Thumbscrew		415949G10	2	2	1							
27	Bin Control 2 (proximity switch)		4A2033-01	1	1	1							
27a	Thumbscrew		415949G08	2	2	2							
28	Bin Control 2 Bracket (proximity switch)		3A1744G01	1	1	1							

Title: A. Main Assembly & Refrigeration Circuit Model: FS-1001MLH-C												
				Required Number								
Index No.	Description	Material or Model Number	Part Number	P-0 (G) to P-0 (L)	P-0 (M) to U-0	U-1 to G-0						
Refrigeration Circuit												
29	Strainer		4A1385-01	1	1	1						
30	Thermostatic Expansion Valve		4A3493-01	1	1	1						
31	Thermostatic Expansion Valve Cover		4A1168-01	1	1	1						
32	Thermostatic Expansion Valve Bulb Holder		3A0112-01	1	1	1						
33	Liquid Line Valve Body		440352-01	1	-							
			4A3276-01		1	1						
34	Valve Coil		440353-01	1	-							
			4A3277-01		1	1						
35	Suction Line Coupling		434072-01	1	1	1						
36	Liquid Line Coupling		426554-01	1	1	1						
37	Drier		4A1338-01	1	1	1						

B. Icemaking Unit
FS-1001MLH-C

P-0 to G-0

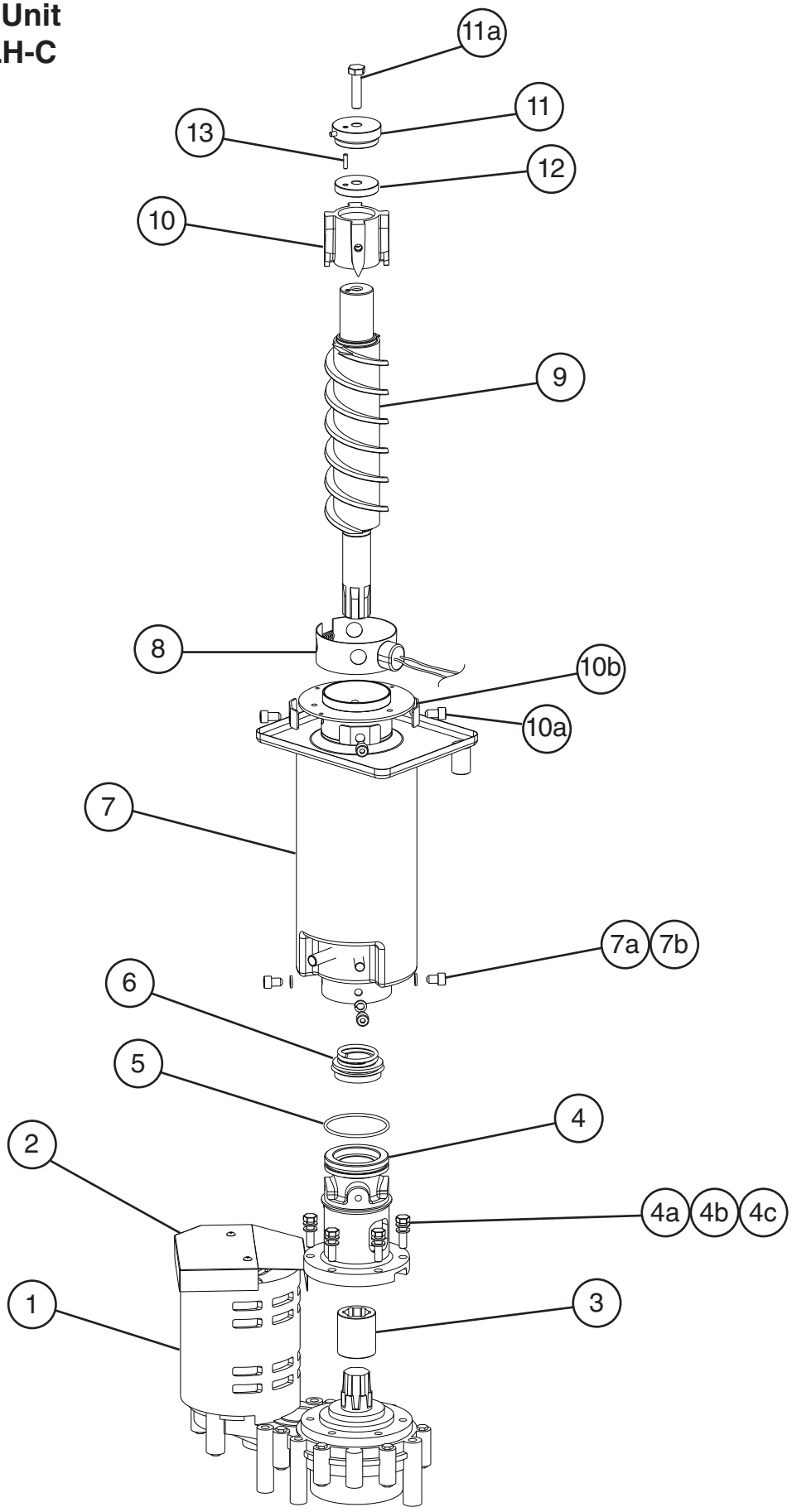

Title: B. Icemaking Unit Model: FS-1001MLH-C													
Index No.	Description	Material or Model Number	Part Number	Required Number									
				P-0 to T-0	T-1 to U-0 (D)	U-0 (E) to V-1	V-1 to V-2	V-3 to D-0 (D)	D-0 (E) to G-0				
1	Gear Motor		4A2007-01	1	1	1	1	1	1				
2	Gear Motor Barrier		4A3441-01	1	1	1	1	1	1				
3	Spline Coupling		414137-01	1	1	1	1	1	1				
4	Housing		2A1977G01	1	1	1	1	1	1				
4a	Hex Head Bolt	8×30, SS	7B02-0830	6	6	6	6	6	6				
4b	Flat Washer	M8, SS	7W22-0800	6	6	6	6	6	6				
4c	Split Lock Washer	M8, SS	7L22-0800	6	6	6	6	6	6				
5	O-Ring		7616-G065	1	1	-							
			4A4755-02			1	1	1	1				
6	Mechanical Seal		432492-01	1	1	1	1	1	1				
7	Evaporator		2A1733G01	1	1	1	1	1	1				
7a	Socket Head Cap Screw	8×12, SS	7S12-0812	4	4	4	4	4	4				
7b	Split Lock Washer	M8, SS	7L22-0800	4	4	4	4	4	4				
8	Evaporator Heater		4A2292-01	1	1	1	1	1	1				
9	Auger		2A2151G03	1	-								
			1A1541G02		1	1	-						
			1A2037G02				1	-					
			120863G02					1	1				
10	Extruding Head		216530G07	1	1	1	1	1	1				
10a	Seal Bolt	M8, SS	P01768-02	4	4	4	4	4	4				
10b	Washer		427184-01	4	4	4	4	4	4				
11	Cutter		4A3443G02	1	1	1	1	1	-				
			427183G01						1				
11a	Hex Head Bolt	10×40, SS	7B02-1040	1	1	1	1	1	-				
12	Washer		4A3418-01	1	1	1	1	1	-				
13	Dowel Pin		713S-0416	1	1	1	1	1	-				

C. Water Circuit

FS-1001MLH-C

P-0 to G-0

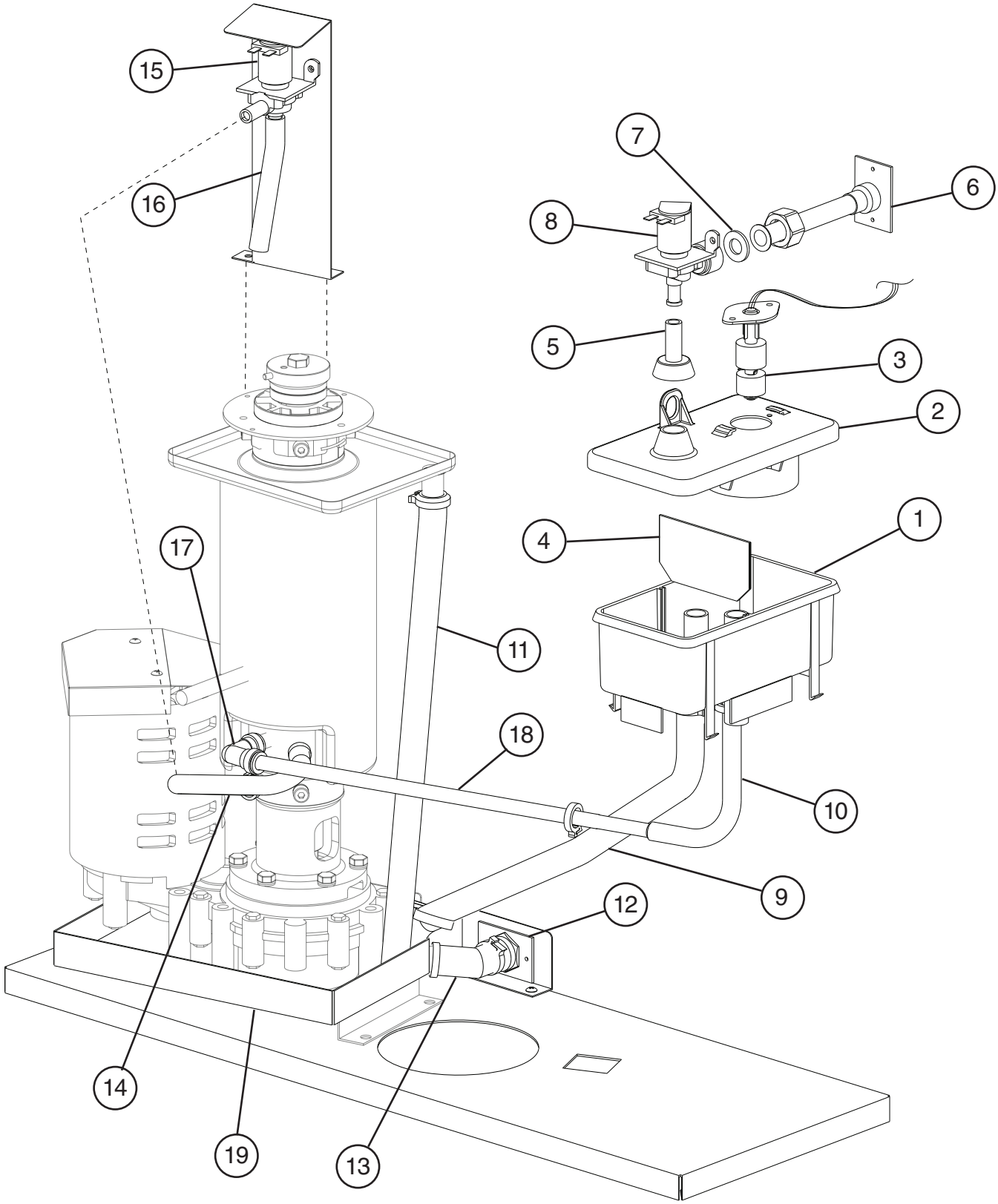

Title: C. Water Circuit Model: FS-1001MLH-C													
				Required Number									
Index No.	Description	Material or Model Number	Part Number	P-0 to Q-0 (J)	Q-0 (K) to S-0 (F)	S-0 (G) to B-0	B-1 to G-0						
1	Reservoir		2A0753-01	1	1	1	1						
2	Reservoir Cover		214810-01	1	1	1	1						
3	Float Switch		435490-01	1	1	1	1						
4	Reservoir Separator		4A1255-01	1	1	1	1						
5	Reservoir Inlet		4A0869-01	1	1	1	1						
6	Water Supply Pipe		3A3161G01	1	1	1	-						
			3A7478G01				1						
7	Washer		4A0867-01	1	1	1	1						
8	Inlet Water Valve		4A0865-01	1	1	1	-						
			4A5309-01				1						
9	Silicone Hose	L=575 mm	7730-1822	1	1	1	1						
10	Reservoir Hose		4A1165-06	1	1	1	1						
11	Vinyl Hose	L=450 mm	7725-1923	1	1	1	1						
12	Drain Fitting		4A5527-01	1	1	1	1						
13	Vinyl Hose	L=45 mm	7716-2025	1	1	1	1						
14	Vinyl Hose	L=320 mm	7716-1216	1	-								
	Silicone Hose		7730I3896		1	1	1						
15	Drain Valve		4A2772-01	1	1	1	1						
16	Vinyl Hose	L=65 mm	7716-0913	1	-								
		L=115 mm	7716-1216		1	1	-						
		L=75 mm	7730I3896				1						
17	Elbow		4A3671-01	1	1	-							
			4A4316-01			1	1						
18	Reservoir Tube	L=320 mm	4A3672-01	1	1	-							
	Polyethylene Tube		4A4317L01			1	1						
19	Drain Pan Assembly		3A3231G01	1	1	1	1						
Clamps													
	Hose Clamp	17-21 mm	4A2017-05	1	1	1	1						
	Hose Clamp	22-25 mm	4A2017-09	5	5	5	1						
	Hose Clamp	14-15 mm	4A2017-08	2	2	2	4						

D. Control Box Assembly

FS-1001MLH-C

P-0 to G-0

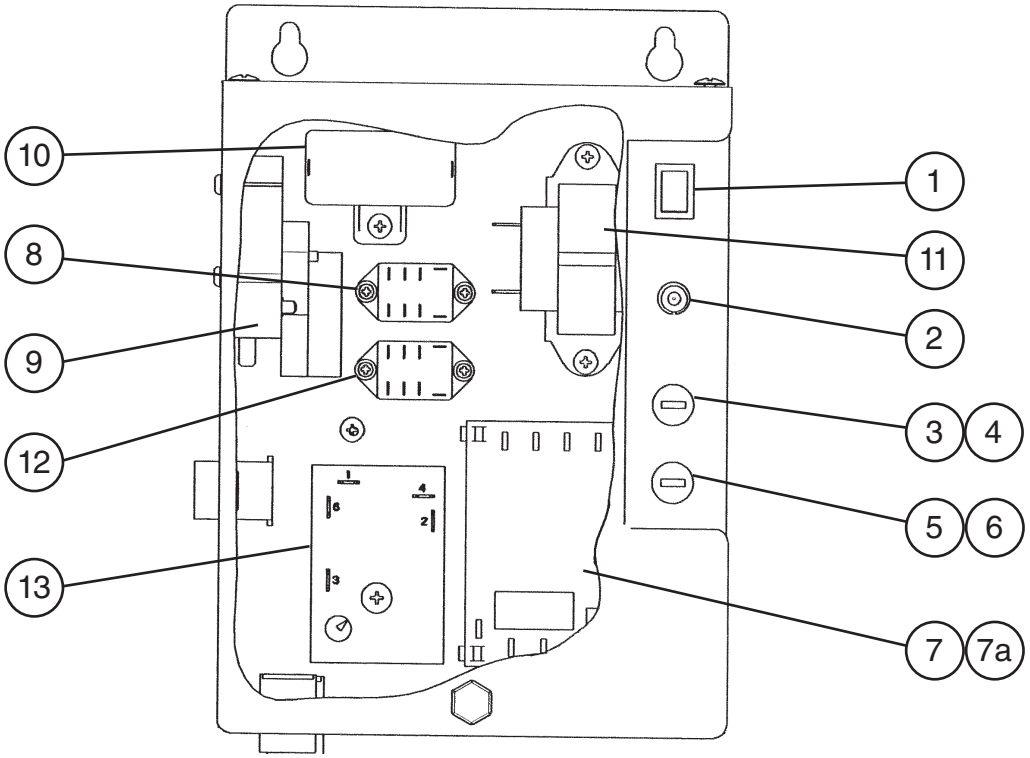

P-0 to U-0

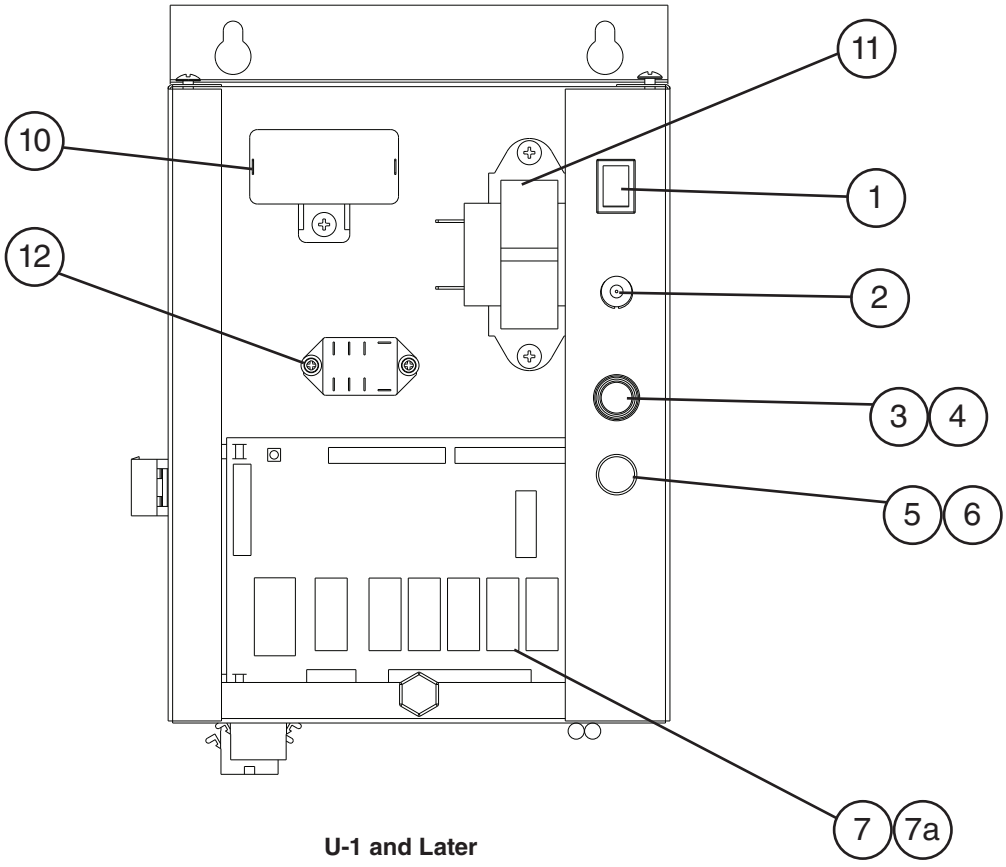

U-1 and Later

Title: D. Control Box Assembly Model: FS-1001MLH-C													
Index No.	Description	Material or Model Number	Part Number	P-0 to Q-0 (J)	Q-0 (K) to U-0	U-1 to V-3	A-0 to G-0					
1	Rocker Switch (flush) (control)		4A0558-01	1	1	1	1					
2	Toggle Switch (power)		4A2332-01	1	1	1	1					
3	Fuse Holder		4A0892-01	1	1	1	-					
			4A5443-01				1					
4	Control Board Fuse	AGC-1A, 250VAC	4A0893-01	1	1	1	1					
5	Fuse Holder		4A3449-02	1	1	1	1					
6	Gear Motor Fuse	GMD-3A, 250VAC Slow Blow	4A0893-06	1	1	1	1					
7	Control Board		437305-01	1	1	-						
	F-C Control Board		2A8054-01			1	1					
7a	Control Board Support		4A0336-03	4	4	4	4					
8	Water Control Relay		406132-03	1	1	-						
9	Drain Timer		4A2157-01	1	1	-						
10	Gear Motor Capacitor	24MFD, 250VAC	4A2273-01	1	1	1	1					
11	Control Transformer		4A0557-01	1	1	1	1					
12	Compressor Control Relay/ Gear Motor Protect Relay		406132-07	1	1	-						
			418271-03			1	1					
13	Time Delay Relay		4A3761-01	1	-							
			4A3940-01		1	-						

E. Accessories & Labels

FS-1001MLH-C

P-0 to G-0

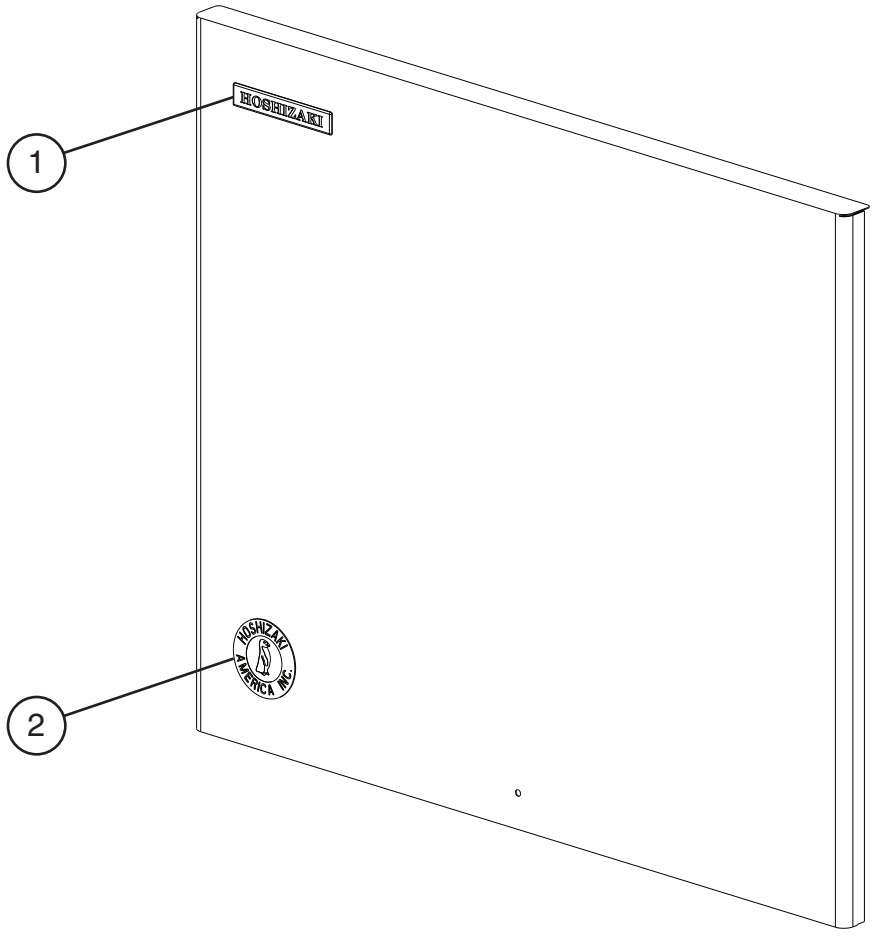

Title: E. Accessories & Labels Model: FS-1001MLH-C													
Index No.	Description	Material or Model Number	Part Number	Required Number									
				P-0 to G-0									
1	Hoshizaki Emblem Label		4A0560-01	1									
2	Penguin Label		4A0526-01	1									
3	Universal Brace		4A0363-01	2									
3a	Hex Bolt		7B02-0512	2									