HOBART

CATALOG OF REPLACEMENT PARTS

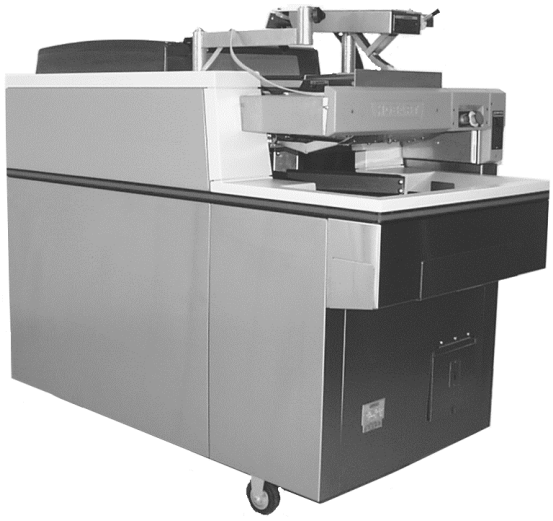

UWS, UWS-1M, UWS-1MU ULTIMA WRAPPING SYSTEM (UWS - 1RL, ML - 44173) (UWS - 1LR, ML - 44174) (UWS - 1RLS, ML - 44202) (UWS - 1LRS, ML - 44193) (UWS - 1M, ML-44193) (UWS-1MU, ML-44198)

A product of HOBART 701 S. RIDGE AVENUE TROY, OHIO 45374-0001

FORM 34203 Rev. A (November 2016)

 © HOBART 2016

Table of Contents

7 F34203 COVER PAGE
9 CONTROL BOX UNIT (WRAPPER)
13 CONTROL BOX UNIT (APPLIER) (ML-44173, ML-44174, ML-44202, & ML-44203)
15 POWER SUPPLY BOX
17 CONVEYOR UNIT(ML-44173, ML-44174, ML-44202, & ML-44203)
21 COVERS (ML-44173, ML-44174, ML-44202, & ML-44203)
23 COVERS (ML-44193 & ML-44198)
25 MOTOR AND CASTER
27 PANELS
31 PANELS AND SUPPORT
33 BANDS AND BRACKETS
35 MAIN DRIVE SHAFT UNIT
37 INTAKE UNIT
41 INTAKE PUSHER UNIT (ML-44198, ML-44173, ML-44174, ML-44202, & ML-44203)
43 INTAKE PUSHER UNIT (ML-44193)
45 INTAKE AND COVERS (ML-44193)
47 INTAKE PLATTERS AND COVERS (ML-44173, ML-44174, ML-44198, ML-44202, & ML-44203)
49 LOADCELL SUPPORT UNIT (ML-44198, ML-44173, ML-44174, ML-44202, & ML-44203)
51 INTAKE UNIT (LOWER PORTION) (ML-44198, ML-44173, ML-44174, ML-44202, & ML-44203)
53 INTAKE UNIT (LOWER PORTION) (ML-44193)
55 ELEVATOR PLATFORM
57 ELEVATOR SUPPORT
59 ELEVATOR LEVER
61 GRIPPER UNLOADER SLIDE UNIT (WITH SOLENOID & LEVER ASSEMBLY)
63 SIDE CLAMP
67 UPPER PUSHER
69 UNDERFOLDER
73 CHAIN AND SPROCKETS
77 BELT SEALER UNIT
79 BELT SEALER
83 SPLIT GRIPPER UNIT
87 SPLIT GRIPPER UNIT
89 GRIPPER LEVER
91 FILM SELECTOR UNIT
95 FILM CHANGER SOLENOID ASSEMBLY
97 FILM SUPPLY UNIT
101 FILM CHAMBER
103 FILM HEATER(UNITS BUILT ON OR BEFORE 9/24/2002)

105 FILM HEATER (PREVIOUS CONSTRUCTION) (UNITS BUILT ON 9/25/2002 THRU 11/9/2004)
107 FILM HEATER(UNITS BUILT ON OR AFTER 11/10/2004)
109 FILM ACCESS DOOR
111 FILM LENGTH
115 KNIFE AND PULLDOWN ASSEMBLY (UPPER SECTION)
117 KNIFE AND PULLDOWN ASSEMBLY (LOWER SECTION)
121 WAND ASSEMBLY (ML-44173, ML-44174, ML-44202, & ML-44203)
125 ARM AND HAND UNIT (ML-44173, ML-44174, ML-44202, & ML-44203)
127 DRIVE AND ROLLER UNIT (ML-44173, ML-44174, ML-44202, & ML-44203)
131 FRONT SHELF KIT (OPTIONAL)
133 SIDE SHELF KIT (OPTIONAL)
135 PRINTER SUPPORT (ML-44193 & ML-44198)
137 SCALE UNIT (ML-44193)
139 PLATFORM ASSEMBLY (ML-44193 & ML-44198)
141 SUPPLY HOLDER (OPTIONAL)
143 MISCELLANEOUS

NOTES

HOBART

CATALOG OF REPLACEMENT PARTS

ULTIMA WRAPPING SYSTEM

UWS (1RL)	**ML-44173**
UWS (1LR)	**ML-44174**
UWS (1RLS)	**ML-44202**
UWS (1LRS)	**ML-44203**
UWS-1M	**ML-44193**
UWS-1MU	**ML-44198**

A product of HOBART 701 S. RIDGE AVENUE TROY, OHIO 45374-0001

FORM 34203

F34203 COVER PAGE

F34203 COVER PAGE

ILLUS.	PART NO.	NAME OF PART	AMT.
PL-F34203 COVER PAGE			
	mL-44173		AR

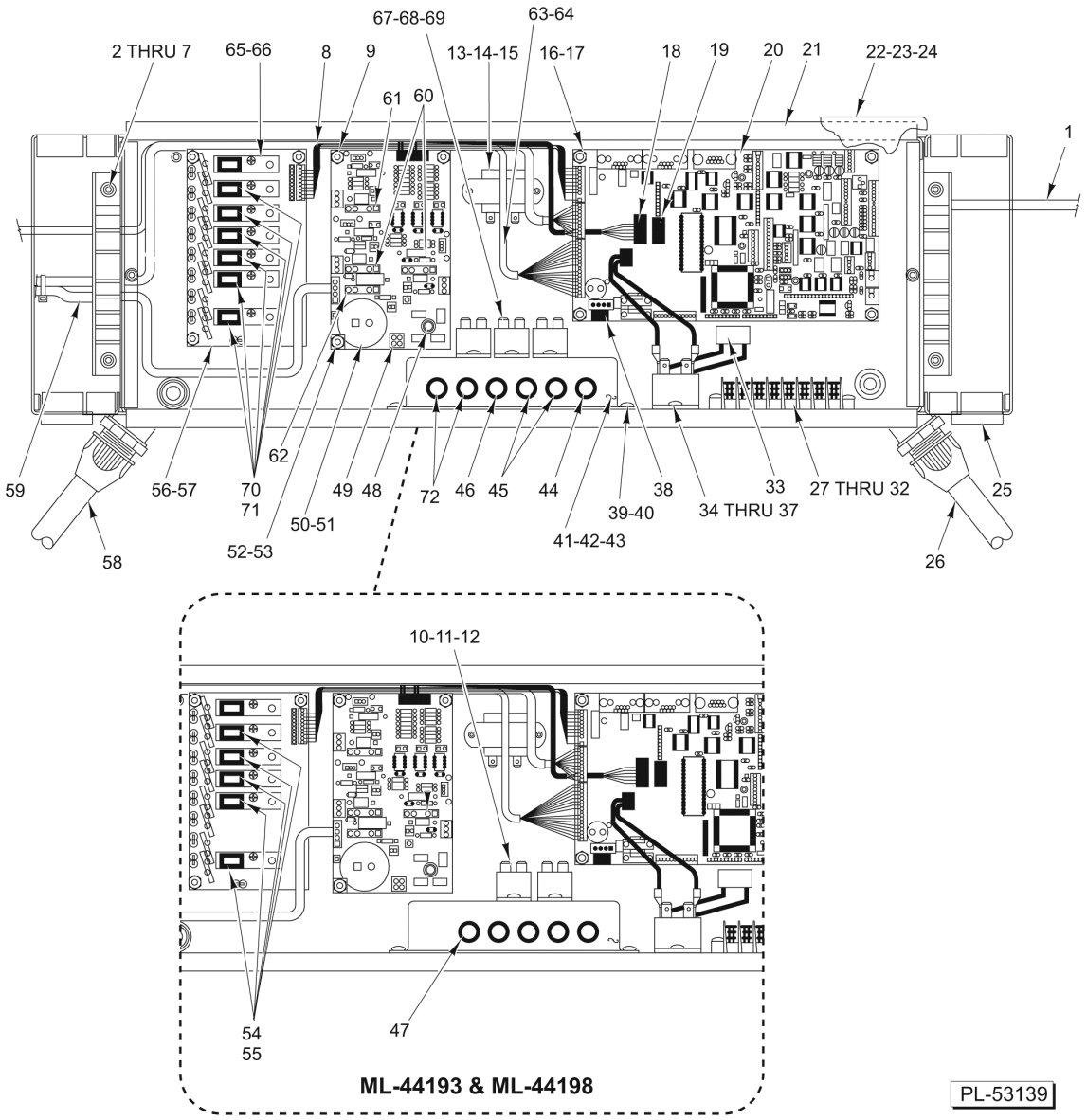

CONTROL BOX UNIT (WRAPPER)

CONTROL BOX UNIT (WRAPPER)

ILLUS. PL-53139	PART NO.	NAME OF PART	AMT.
1	00-042070-00013	Cable Assy. (10 Ft.)	1
2	SC-100-04	Mach. Screw 10-24 x 3/8 Hex Washer Hd. (Previous Construction)	4
3	SC-018-23	Mach. Screw 8-32 x 5/8 Phil. Pan Hd. (Current Construction)	4
4	WL-008-07	Lockwasher #8 Internal Shakeproof (Current Construction)	4
5	00-047939	Standoff Backstop (Previous Construction)	4
6	00-048027	Support - Cable	2
7	00-442367	Cover Mount Assy. - Control Box	2
8	00-046934-00001	Harness - CPUI/Module Board	1
9	SC-018-23	Mach. Screw 8-32 x 5/8 Phil. Pan Hd	2
10	WL-008-07	Lockwasher #8 Internal Shakeproof (ML-44193 & ML-44198)	4
11	00-046971	Relay - Solid State (280 V.) (12 Amp.) (ML-44193 & ML-44198)	2
12	SC-018-33	Mach. Screw 8-32 x 5/16 Phil. Pan Hd. (ML-44193 & ML-44198)	4
13	WL-008-07	Lockwasher 8 Internal Shakeproof	4
14	00-044539	Transformer (115/220) (10 VAC)	1
15	SC-018-33	Mach. Screw 8-32 x 5/16 Phil. Pan Hd	2
16	WL-008-07	Lockwasher 8 Internal Shakeproof	4
17	SC-018-23	Mach. Screw 8-32 x 5/8 Phil. Pan Hd	4
18	00-046935-00001	Harness - CPUI/PWM Board	1
19	00-046936-00001	Harness - CPUI/SSR s	1
20	00-048522	Board Assy. - Wrapper Controller	1
21	00-442068	Box - Control	1
22	SC-018-23	Mach. Screw 8-32 x 5/8 Phil. Pan Hd	2
23	WL-008-07	Lockwasher 8 Internal Shakeproof	2
24	00-442363	Cover - Control Box	1
25	FE-025-65	Bushing - Electrical	2
26	00-046987-00001	Cable Assy. (Right)	1
27	00-046914	Block - Terminal (8 Position)	1
28	WL-008-07	Lockwasher 8 Internal Shakeproof	2
29	SC-018-23	Mach. Screw 8-32 x 5/8 Phil. Pan Hd	2
30	00-046915	Cover - Terminal Block (8-Position)	1
31	00-046916	Pin - Terminal Block Securing	2
32	00-046917	Strip - Marker	1
33	00-440193	Filter Assy. (R-C)	3
34	00-046365	Relay - 2 Pole (30 Amp.) (DPST)	1
35	SC-018-33	Mach. Screw 8-32 x 5/16 Phil. Pan Hd	2
36	WL-008-07	Lockwasher 8 Internal Shakeproof	2
37	00-046938-00001	Harness - CPUI/Relay	1
38	00-046937-00001	Harness - CPUI Power/T1	1
39	SC-018-33	Mach. Screw 8-32 x 5/16 Phil. Pan Hd	2
40	WL-008-07	Lockwasher 8 Internal Shakeproof	2
41	00-047986	Box Assy. - Fuse	1
42	00-046911	Holder Fuse Panel Mount	6
43	00-334655-00005	Grommet - Caterpillar	1
44	FE-024-94	Fuse (4 Amp.) (250 V.)	1
45	FE-025-05	Fuse (0.25 Amp.) (250 V.)	2
46	00-330917	Fuse - Slow Blow (10 Amp.)	1
47	FE-025-72	Fuse (6.25 Amp.) (250 V.) (ML-44193 & ML-44198)	1
48	SC-018-23	Mach. Screw 8-32 x 5/8 Phil. Pan Hd	1
49	00-046943-00001	Harness - Power/T2	1
50	00-046969	Board Assy. - Solenoid (Wrapper DC Power Supply)	1
51	SC-018-23	Mach. Screw 8-32 x 5/8 Phil Pan Hd	4
52	SC-018-23	Mach. Screw 8-32 x 5/8 Phil Pan Hd	1
53	WL-008-07	Lockwasher #8 Internal Shakeproof (Use at This Location Only for Board Mtg.)	1
54	00-047473-00001	Module - SSR (240 VAC) (0.5 Amp.) (Fused) (ML-44193 & ML-44198)	5
55	FE-025-70	Fuse (0.5 Amp.) (250 V.) (ML-44193 & ML-44198)	6

CONTROL BOX UNIT (WRAPPER)

ILLUS. PL-53139	PART NO.	NAME OF PART	AMT.
56	00-046977	Board Assy. - Module	1
57	SC-018-23	Mach. Screw 8-32 x 5/8 Phil. Pan Hd	4
58	00-046986-00001	Cabinet Assy. (Left)	1
59	00-042981-00001	Harness - Scale Motor Controller	1
60	FE-025-61	Fuse (1.25 Amp.) (250 V.)	2
61	FE-025-62	Fuse (2 Amp.) (250 V.)	1
62	FE-025-63	Fuse (5 Amp.) (250 V.)	1
63	00-046941	Cable Assy. - Intake Switches CPUI (ML-44173, ML-44174, ML-442021, ML-44203, & ML-44198)	1
64	00-441063	Cable Assy. - Intake Switches CPUI (ML-44193)	1
65	00-047473-00002	Module - SSR (240 VAC) (1 Amp.) (Fused)	1
66	FE-025-71	Fuse (1 Amp.) (250 V.)	1
67	WL-008-07	Lockwasher #8 Internal Shakeproof (ML-44173, ML-44174, ML-44202, & ML-44203)	6
68	00-046971	Relay - Solid State (12 Amp., 280 V.)	3
69	SC-018-33	Mach. Screw 8-32 x 5/16 Phil. Pan Hd. (ML-44173, ML-44174, ML-44202, & ML-44203)	6
70	00-047473-00001	Module - SSR (240 VAC) (0.5 Amp.)(Fused)(ML-44173,ML-44174,ML-442026,& ML-44203)	6
71	FE-025-70	Fuse (0.5 Amp.) (250 V.) (ML-44173, ML-44174, ML-44202, & ML-44203)	7
72	FE-025-72	Fuse (6.25 Amp.) (250 V.) (ML-44173, ML-44174, ML-44202, & ML-44203)	2

NOTES

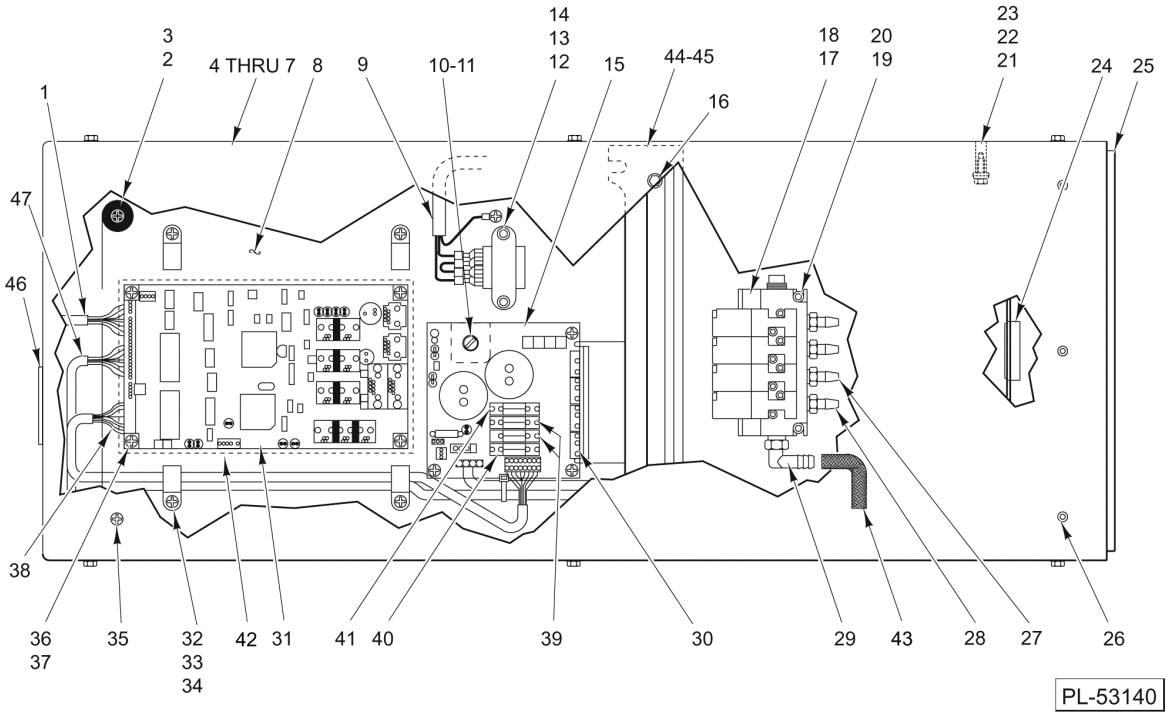

CONTROL BOX UNIT
(APPLIER)
(ML-44173, ML-44174, ML-44202, & ML-44203)

CONTROL BOX UNIT
(APPLIER)
(ML-44173, ML-44174, ML-44202, & ML-44203)

ILLUS. PL-53140	PART NO.	NAME OF PART	AMT.
1	00-046989	Harnais - Solenoid Driver	1
2	00-254107	Bumper - Recessed	1
3	SC-018-31	Mach. Screw 8-32 x 3/8 Phil. Pan Hd	1
4	00-047988	Box Assy. - Lower Control	1
5	00-047993	Cover Assy. - Lower Control Box	1
6	00-048178	Cover Assy. - Lower Control Box (Rear)	1
7	SC-119-97	Mach. Screw 10-24 x 1/2 Hex Washer Hd	9
8	00-047996	Plate Assy. - Lower Control	1
9	00-046982	Cable Assy. - Power/T3 MLA Logic	1
10	SC-018-23	Mach. Screw 8-32 x 5/8 Phil. Pan Hd	4
11	WL-008-07	Lockwasher 8 Internal Shakeproof	4
12	00-044539	Transformer - 115/220, 10 VAC	1
13	SC-018-31	Mach. Screw 8-32 x 3/8 Phil. Pan Hd	2
14	WL-008-07	Lockwasher 8 Internal Shakeproof	2
15	00-048524	Board Assy. - Power Control	1
16	SC-100-04	Mach. Screw 10-24 x 3/8 Hex Washer Hd	4
17	00-042514	Valve & Connector Assy	1
18	00-042779	Plug - Minature	1
19	SC-124-37	Cap Screw 10-24 x 1-3/8 Hex Socket Hd	2
20	WL-008-13	Lockwasher #10 Internal Shakeproof	2
21	00-048179	Retainer - Cable	3
22	SC-100-04	Mach. Screw 10-24 x 3/8 Hex Washer Hd	3
23	WL-008-07	Lockwasher 8 Internal Shakeproof	3
24	FE-025-65	Bushing - Electrical (Split)	1
25	00-047995	Support - Lower Control Box	1
26	SC-100-04	Mach. Screw 10-24 x 3/8 Hex Washer Hd	6
27	00-048031	Fitting - Barb (1/16 I.D. Hose)	1
28	00-041720	Fitting - Straight 1/4"	6
29	00-333153	Fitting - Hose 90 Deg. Elbow	1
30	00-041711	Clip - Type U	4
*31	00-049482	Board Assy. - (LA Control & Comm.) (CPU2)	1
32	00-086961	Clamp - Loop Type 6NA	4
33	SC-01-31	Mach. Screw 8-32 x 3/8 Phil. Pan Hd	8
34	WL-008-07	Lockwasher 8 Internal Shakeproof	8
35	SC-018-31	Mach. Screw 8-32 x 3/8 Phil. Pan Hd	8
36	SC-018-23	Mach. Screw 8-32 x 5/8 Phil. Pan Hd	4
37	WL-008-07	Lockwasher 8 Internal Shakeproof	4
38	00-042981-00001	Harness - Scale Motor Controller	1
39	FE-025-08	Fuse (F3) & (F4) (250 V., 7 Amp.) Fast-Blo	1
40	FE-022-23	Fuse (F1) (250 V., 3 Amp.)	2
41	FE-024-34	Fuse (F2) (250 V., 0.5 Amp.)	1
42	00-440811	Shield	1
43	00-048182-00001	Tubing - Braided	1
44	00-048090-00001	Protector - Edge	2
45	00-047990	Bracket Assy. - Slide	1
46	FE-024-23	Bushing - Electrical (Snap)	1
47	00-046957	Harness - CPU2/Power Control	1

* See SMS USW_1 For Firmware

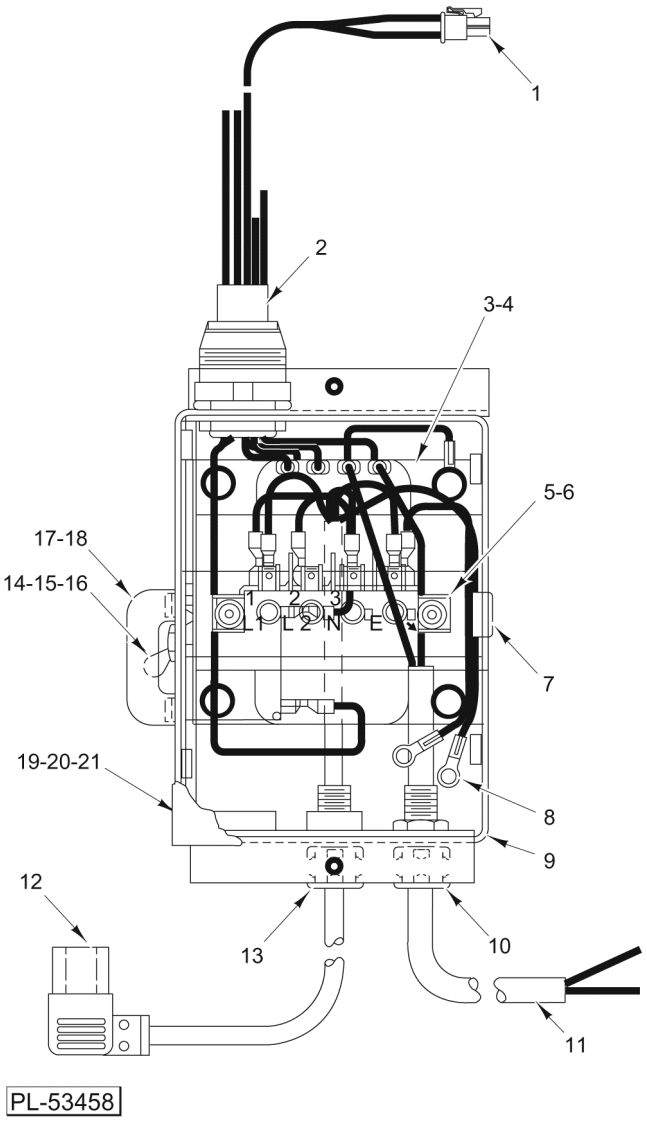

POWER SUPPLY BOX

POWER SUPPLY BOX

ILLUS. PL-53458	PART NO.	NAME OF PART	AMT.
1	00-046943-00001	Harness - Power/T2	1
2	FE-024-58	Connector - Straight (Non-Metallic) Sealtite (3/4 Male Thd. x 3/4 Flex Cond.)	1
3	00-046975	Transformer, 220 VAC., 50/60 Hz	1
4	SC-100-08	Mach. Screw 1/4-20 x 3/8 Hex Washer Hd	2
5	SC-100-04	Mach. Screw 10-24 x 3/8 Hex Washer Hd	4
6	00-048064	Block - Terminal	1
7	00-048233	Bracket Assy. - Wiring Terminal	1
8	00-046939-00022	Wire Assy. (Green/Yellow)	1
9	00-048261	Box Assy. - Power Supply	1
10	PB-004-08	Plug Button 7/8 (Heyco 2703)	1
11	00-046981	Cable Assy. - T2/MLA 28 VAC (ML-44173, ML-44174, ML-44202, & ML-44203)	1
12	00-048545	Cable Assy. - Power Cord	2
13	PB-004-86	Plug - Button 11/8 (Heyco 2723)	1
14	00-046931	Breaker - Circuit 25 Amps	1
15	WL-003-09	Lockwasher #6 Helical	2
16	SC-018-77	Mach. Screw 6-32 x 5/16 Phil. Pan Hd	2
17	00-047476	Guard - Circuit Breaker	1
18	SC-100-04	Mach. Screw 10-24 x 3/8 Hex Washer Hd	2
19	00-048087	Cover - Power Supply Box	1
20	SC-053-05	Mach. Screw 10-24 x 3/8 Slotted Truss Hd	2
21	00-049343	Label - Caution	1

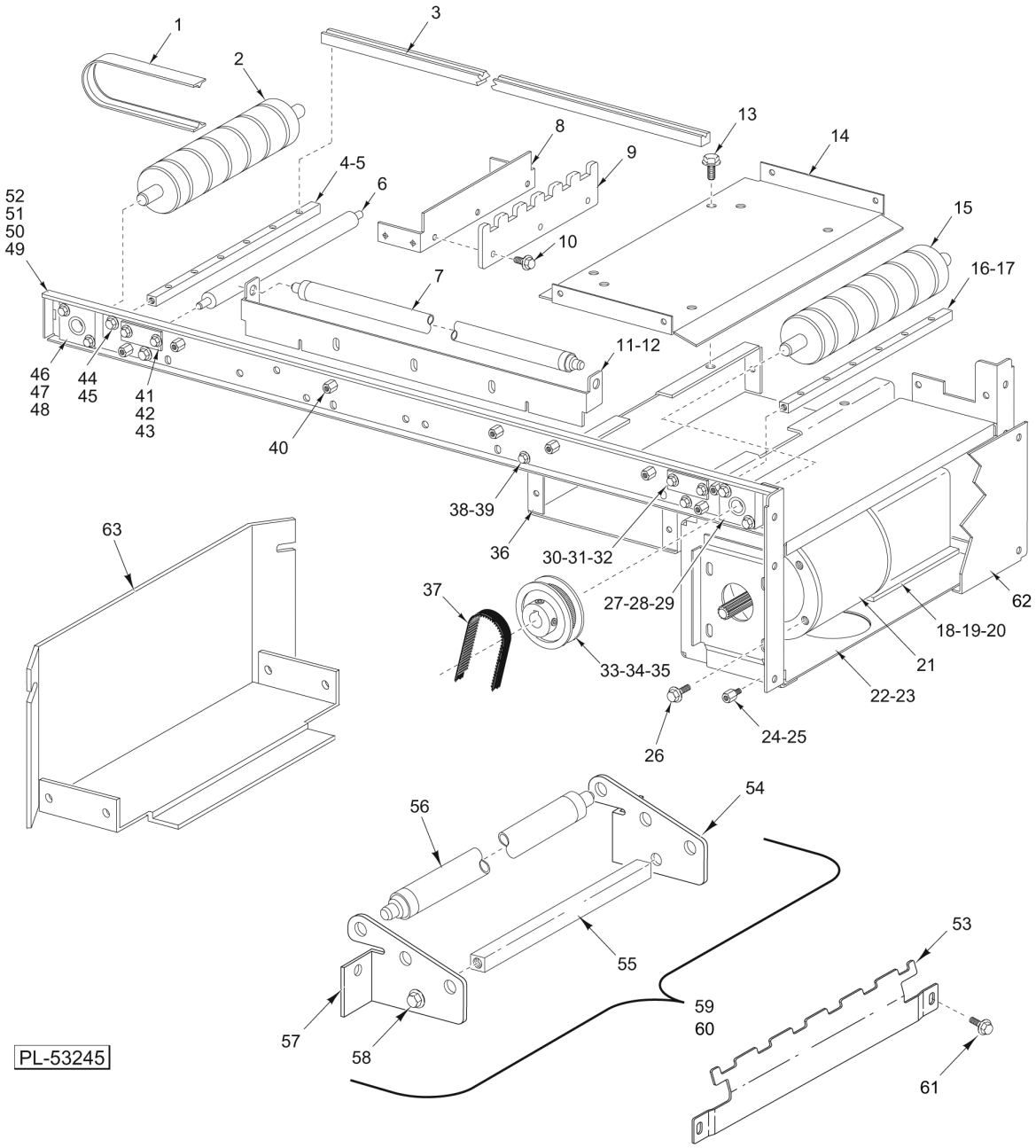

CONVEYOR UNIT(ML-44173, ML-44174, ML-44202, & ML-44203)

CONVEYOR UNIT(ML-44173, ML-44174, ML-44202, & ML-44203)

ILLUS. PL-53245	PART NO.	NAME OF PART	AMT.
1	00-047918	Belt - Package (Discharge)	6
2	00-047890	Roller Assy. (Driven)	1
3	00-047896	Support - Belt	6
4	00-047869	Support - Slider Bed	2
5	SC-040-64	Cap. Screw 10-24 x 1/2 Hex Socket Hd	12
6	00-442536	Roller - Belt Tension	2
7	00-048020-00002	Roller Assy	1
8	00-048012	Bracket Assy. - Belt Guide	1
9	00-048014	Guide - Belt	1
10	SC-100-04	Mach. Screw 10-24 x 3/8 Hex Washer Hd	3
11	00-048287	Bracket - Roller	1
12	SC-100-04	Mach. Screw 10-24 x 3/8 Hex Washer Hd	1
13	SC-100-04	Mach. Screw 10-24 x 3/8 Hex Washer Hd	6
14	00-048023	Cover Assy. - Bottom	1
15	00-047893	Roller Assy. - Belt Drive	1
16	00-047869	Support - Slider Bed	2
17	SC-040-64	Cap. Screw 10-24 x 1/2 Hex Socket Hd	12
18	00-041588	Control Assy. - Motor (Includes Control Board)	1
19	00-048034	Heat Sink - Motor Control	1
20	SC-053-05	Mach. Screw 10-24 x 3/8 Slotted Truss Hd	2
21	00-041784	Motor - Brushless D.C.	1
22	00-048015	Box Assy. - Drive Motor	1
23	FE-024-43	Bushing - Split (Electrical)	1
24	00-047939	Standoff - Backstop	1
25	WL-006-07	Lockwasher #10 Helical (SST)	1
26	SC-100-08	Mach. Screw 1/4-20 x 3/8 Hex Washer Hd	4
27	00-047862	Retainer Assy. - Bearing	2
28	SC-092-35	Cap Screw 10-24 x 3/8 Hex Socket Hd	4
29	WL-006-07	Lockwasher #10 Helical (SST)	4
30	00-047866	Plate - Tension Roller Bearing	2
31	00-441042	Bearing - Tension Roller	2
32	SC-100-04	Mach. Screw 10-24 x 3/8 Hex Washer Hd	4
33	00-048180	Pulley - Timing	1
34	KW-003-03	Key - Woodruff 1/8 x 1/2 Lg	1
35	SC-047-74	Set Screw 8-32 x 1/4 Hdls., Cup Pt	2
36	00-048025	Box Assy. - Switch Cover	1
37	00-048181	Belt - Timing (LA Driver)	1
38	00-048023	Cover Assy. - Bottom	1
39	SC-100-04	Mach. Screw 10-24 x 3/8 Hex Washer Hd	2
40	00-047939	Standoff - Backstop	10
41	00-047866	Plate - Tension Roller Bearing	2
42	00-441042	Bearing - Tension Roller	2
43	SC-100-04	Mach. Screw 10-24 x 3/8 Hex Washer Hd	4
44	SC-040-64	Cap. Screw 10-24 x 1/2 Hex Socket Hd	4
45	WL-006-07	Lockwasher #10 Helical (SST)	4
46	00-047862	Retainer Assy. - Bearing	4
47	SC-092-35	Cap Screw 10-24 x 3/8 Hex Socket Hd	8
48	WL-006-07	Lockwasher #10 Helical (SST)	8
49	00-047867	Frame Assy. - Belt Conveyor	2
50	00-047870	Strip - Trim (Front) (Not Shown)	1
51	00-048033	Strip - Trim (Rear) (Not Shown)	1
52	SC-100-04	Mach. Screw 10-24 x 3/8 Hex Washer Hd	4
53	00-440011	Stripper - Label	1
54	00-049754-00001	Bracket - Discharge Roller (RH)	1
55	00-048094	Bar - Discharge Roller	1

CONVEYOR UNIT(ML-44173, ML-44174, ML-44202, & ML-44203)

ILLUS. PL-53245	PART NO.	NAME OF PART	AMT.
56	00-047385	Roller Assy. - Conveyor	3
57	00-049754-00002	Bracket - Discharge Roller (LH)	1
58	SC-100-04	Mach. Screw 10-24 x 3/8 Hex Washer Hd	2
59	00-048289	Discharge Assy. - Roller (Incls. Items 54 thru 58)	1
60	00-048095	Bracket - Roller Single	1
61	SC-053-05	Mach. Screw 10-24 x 3/8 Slotted Truss Hd	6
62	00-048022	Cover - Drive Motor	1
63	00-047950	Cover Assy. - Lower Intake	1

NOTES

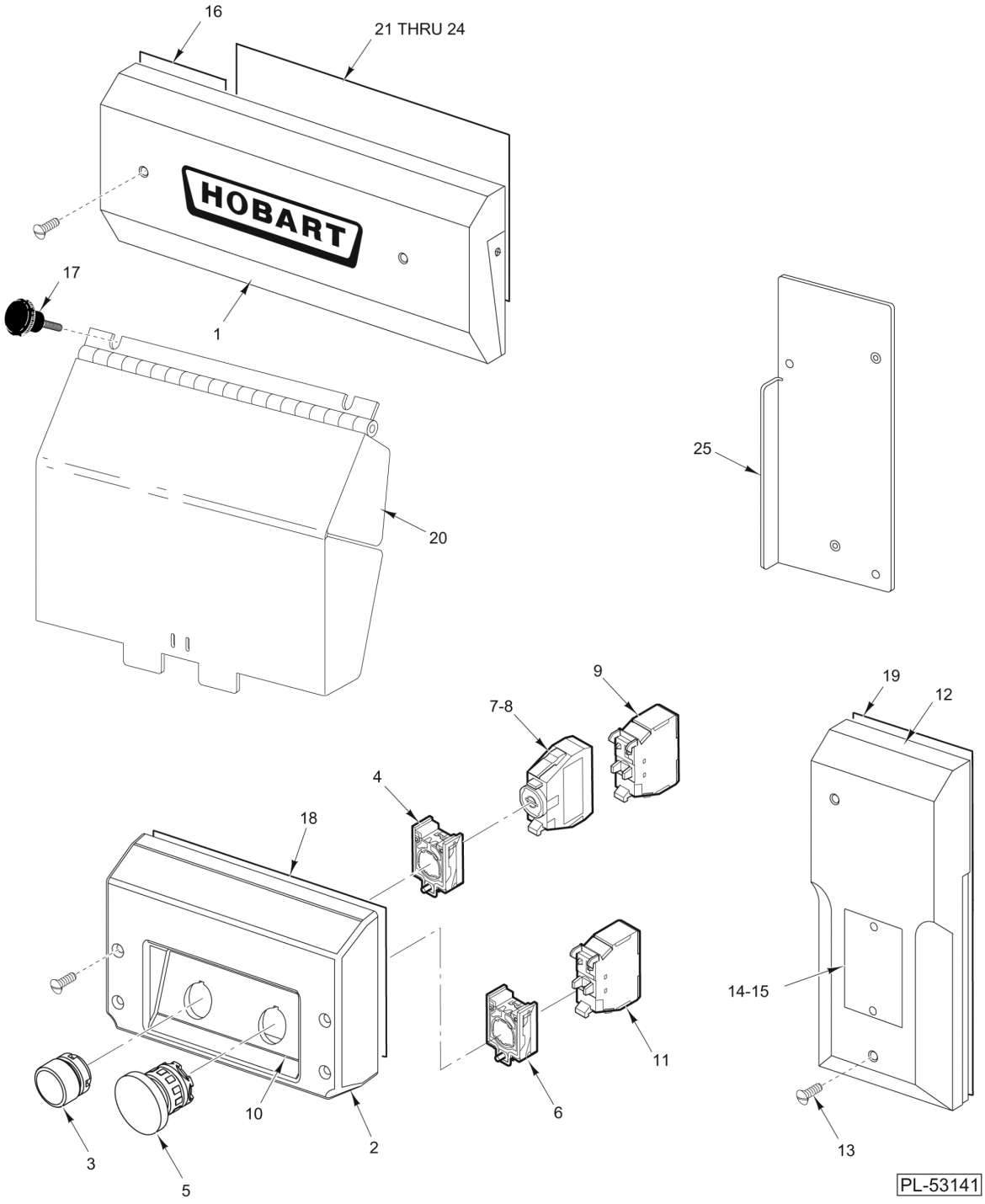

COVERS
(ML-44173, ML-44174, ML-44202, & ML-44203)

COVERS
(ML-44173, ML-44174, ML-44202, & ML-44203)

ILLUS. PL-53141	PART NO.	NAME OF PART	AMT.
1	00-048028	Cover - Front	1
2	00-048029	Cover - Switch	1
3	00-441551	Actuator Operator (Start)	1
4	00-441555	Collar - Mounting	1
5	00-441550	Actuator - Operator (Stop)	1
6	00-441555	Collar - Mounting	1
7	00-441552	Module	1
8	00-046910	Lamp - LED (Green)	1
9	00-441554	Switch - Contact Block (NO)	1
10	00-048245	Overlay - Switch	1
11	00-441553	Switch - Contact Block (NC)	2
12	00-048030	Cover - Motor	2
13	SC-023-44	Mach. Screw 10-24 x 1/2 Slotted Oval Hd	8
14	00-438131-00009	Plate - Warning	1
15	SD-033-56	Self-Tapping Screw #2 x 3/16 Rd. Hd., Type U (SST)	2
16	00-047957	Plate Assy. - Cover Mounting (Intake End)	1
17	00-049463	Knob - Panel Assy. (High Package)	2
18	00-047959	Plate Assy. - Switch Cover Mounting	1
19	00-047955	Plate Assy. - Cover Mounting (Motor End)	1
20	00-440848	Panel - High Package	1
21	00-047952	Stop Assy. - Package	1
22	00-043895-00001	Sensor - Photo Transistor Assy. (Emitter)	2
23	00-047964	Bracket - Sensor Mounting	1
24	SC-100-04	Mach. Screw 10-24 x 3/8 Hex Washer Hd	13
25	00-047961	Plate - Assy. - Cover	1
	00-441556	Cable - Assy. - Switch (Stop/Start)	1
	00-175999	Actuator - Magnetic	1
	00-175998	Sensor	1
	00-183396	Plate - Switch Screw	2
	WL-003-03	Lockwasher #4 Helical	2
	SC-113-10	Mach. Screw 4-40 x 3/8 Phil. Pan Hd	2
	00-441764	Plate - Stop (Produce Applications)	AR

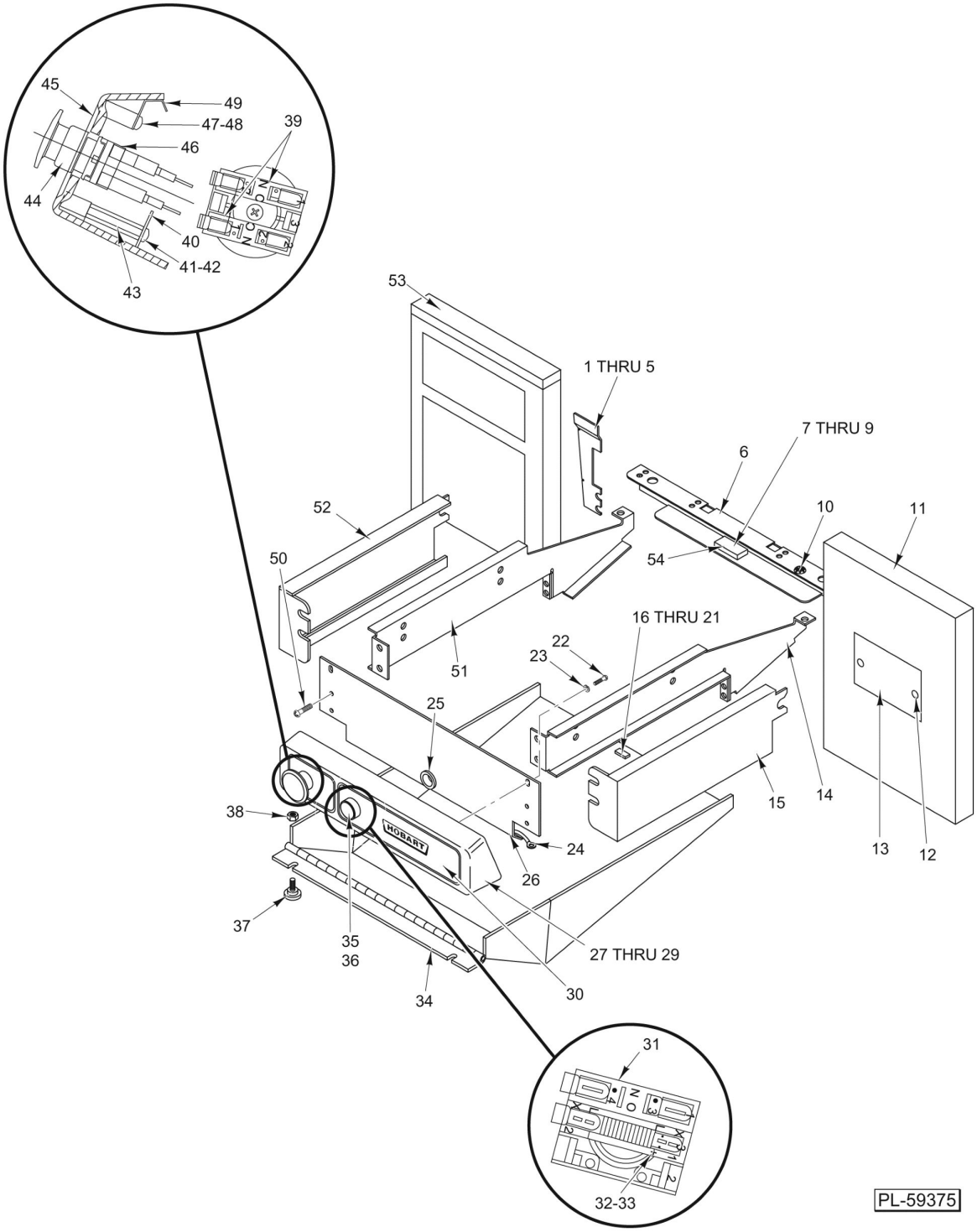

COVERS
(ML-44193 & ML-44198)

COVERS
(ML-44193 & ML-44198)

ILLUS. PL-59375	PART NO.	NAME OF PART	AMT.
1	00-441473	Bracket - Chain Cover	1
2	SC-067-07	Mach. Screw 10-24 x 1/2 Hex Hd. (SST)	2
3	WL-006-07	Lockwasher #10 Helical (SST)	2
4	WS-029-79	Washer	2
5	00-441462	Spacer - Chain Cover	2
6	00-441124	Stop - High Package	1
7	00-183396	Plate - Screw Switch	1
8	WL-003-03	Lockwasher #4 Helical	2
9	SC-113-10	Mach. Screw 4-40 x 3/8 Phil. Pan Hd	2
10	00-441127	Grommet - Ribbed	4
11	00-175466	Cover - Face (RH)	1
12	SD-033-56	Self-Tapping Screw #2 x 3/16 Rd. Hd., Type U (SST)	2
13	00-438131-00005	Plate - Warning	1
14	00-047981	Support Assy. - Conveyor (RH)	1
15	00-441125	Cover - Side (RH)	1
16	00-175999	Actuator - Magnetic	1
17	00-183396	Plate - Screw Switch	4
18	SC-113-10	Mach. Screw 4-40 x 3/8 Phil. Pan Hd	8
19	WL-003-03	Lockwasher #4 Helical	8
20	WS-029-24	Washer	8
21	00-440712	Plate - Sensor	1
22	SD-024-38	Self-Tapping Screw 10-24 x 3/8 Phil. Pan Hd., Type TT	2
23	WL-006-07	Lockwasher #10 Helical (SST)	2
24	00-041480	Ground Wire Assy	1
25	FE-021-13	Bushing (Nylon) 1/2 I.D	1
26	00-441123	Cover Plate Assy. - Control Panel	1
27	00-175573	Cover - Control Panel	1
28	RR-011-78	Retaining Ring	8
29	00-048546	Cable Assy. - Stop/Start Switch	1
30	00-048266	Plate Assy. - Control Panel	1
31	00-441554	Switch - Contact Block (NO)	1
32	00-441552	Socket - Contact Block (Lamp Holder)	1
33	00-046910	Lamp - LED (Green)	1
34	00-441120	Panel - High Package	1
35	00-441555	Collar - Mounting	1
36	00-441551	Actuator - Push Button, Start (Incls. Diffuser and Lens)	1
37	00-049463	Knob - Panel Assy. (High Package)	2
38	NS-031-15	Stop Nut 10-24 Hex (SST)	2
39	00-441553	Switch - Contact Block (NO)	2
40	00-047913	Mount - Cover Plate	2
41	WL-006-07	Lockwasher #10 Helical (SST)	2
42	SC-018-14	Mach. Screw 10-32 x 3/8 Slotted Pan Hd	2
43	00-183398	Spacer - Control Panel	2
44	00-441550	Actuator - Push Button (Stop)	1
45	00-048267	Plate Assy. - Control Panel	2
46	00-441555	Collar - Mounting	1
47	WL-003-12	Lockwasher #8 Helical	2
48	SC-018-31	Mach. Screw 8-32 x 3/8 Phil. Pan Hd	2
49	00-183397	Bracket - Control Panel	2
50	SC-100-04	Mach. Screw 10-24 x 3/8 Hex Washer Hd	4
51	00-047983	Support Assy. - Conveyor (LH)	1
52	00-441126	Cover - Side (LH)	1
53	00-175467	Cover - Face (LH)	1
54	00-175998	Sensor - Switch (CRT)	1

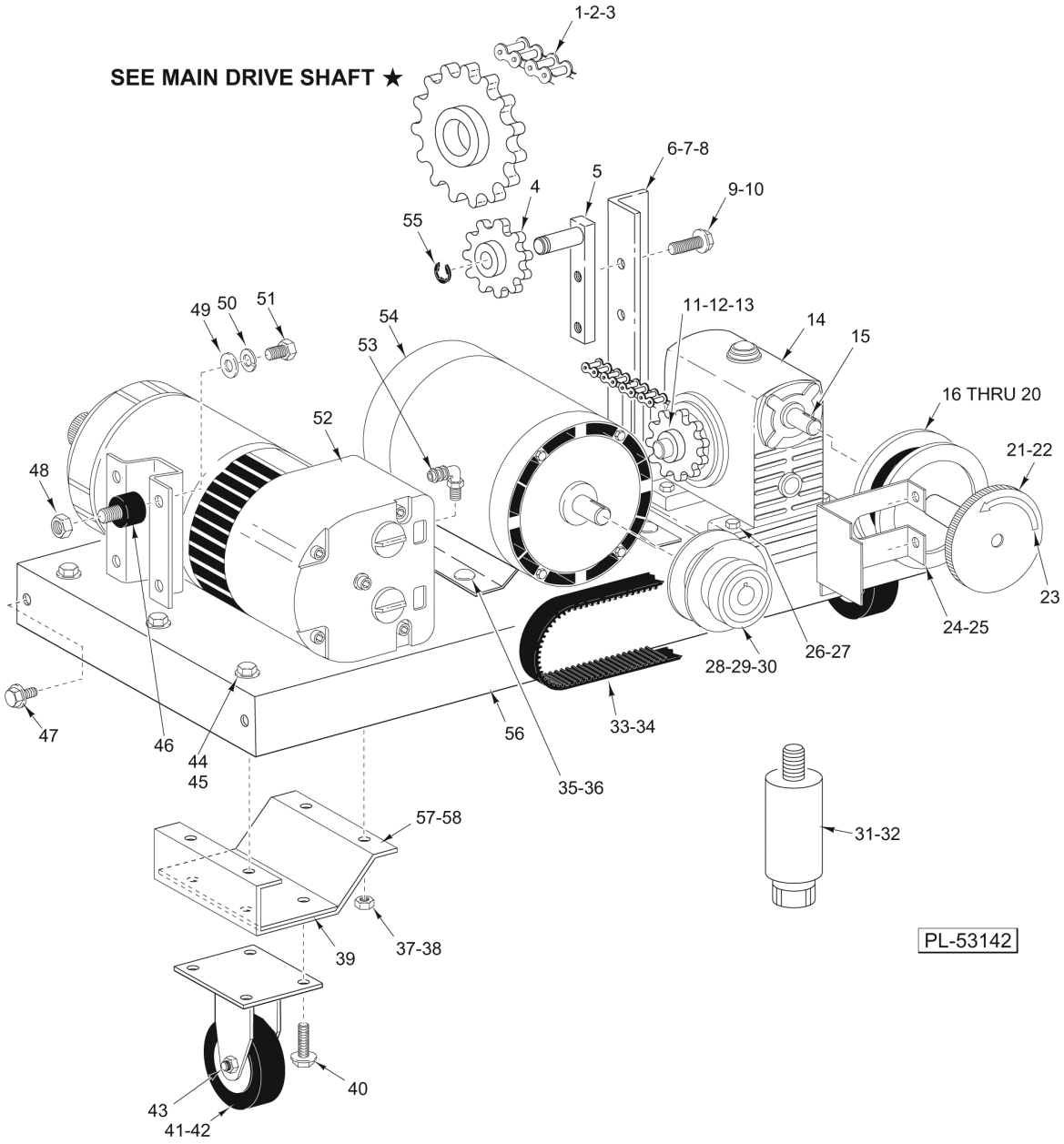

MOTOR AND CASTER

MOTOR AND CASTER

ILLUS. PL-53142	PART NO.	NAME OF PART	AMT.
1	00-046228	Chain Assy. - Main Drive (Incls. Items 2 & 3)	1
2	00-044784	Link - Connecting #40 (WP Finish)	1
3	00-044785	Link - Offset #40 (WP Finish)	1
4	00-047818	Sprocket - Idler (15T)	1
5	00-047820	Takeup Assy	1
6	00-047324	Plate Assy. - Chain Idler	1
7	SC-116-83	Cap Screw 3/8-16 x 1 1/2 Hex Hd	2
8	NS-038-10	Lock Nut 3/8 -16	2
9	SC-123-94	Cap Screw 3/8-16 x 3/4 Hex Washer	AR
10	WS-018-22	Washer	1
11	00-333472	Sprocket - Reducer (26T)	1
12	SC-075-15	Set Screw 5/16-18 x 3/8 Hex Hdls., Cup Pt	2
13	00-087789	Key 3/16 x 1 Lg	1
14	00-175887	Reducer - Gear	1
15	00-087789	Key 3/16 x 1 Lg	1
16	00-332367	Sheave - Speed Reducer (41/2 In. Dia.) (ML-44173, ML-44174, ML-44202, & ML-44203)	1
17	00-183740	Sheave - Speed Reducer (ML-44193 & ML-44198)	1
18	SC-068-31	Mach. Screw 10-32 x 3/4 Hex Hd	3
19	WL-004-40	Lockwasher 10 Helical	3
20	NS-009-30	Nut 10-32 Hex	3
21	00-442492	Handwheel Assy	1
22	SC-075-15	Set Screw 5/16 -18 x 3/8 Hex Hdls., Cup Pt	2
23	00-441194	Label - Direction (CCW)	1
24	00-442513	Cover - Belt & Pulley	1
25	SC-100-08	Mach. Screw 1/4-20 x 3/8 Hex Washer Hd	4
26	SC-116-83	Cap Screw 3/8-16 x 1 1/2 Hex Hd	4
27	NS-038-10	Lock Nut 3/8-16	4
28	00-084717	Pulley - Variable	1
29	00-087789	Key 3/16 x 1 Lg	4
30	SC-047-75	Set Screw 1/4 -20 x 1/4 Socket Hdls., Cup Pt	2
31	00-330866	Leg - Adjustable (4 In.)	4
32	00-049038	Leg - Adjustable (6 In.)	4
33	00-128749	Belt - Drive (AX-26) (ML-44173, ML-44174, ML-44202, & ML-44203)	1
34	BV-013-26	V-Belt (A29) (ML-44193 & ML-44198)	1
35	SC-078-42	Bolt - Square Neck 5/16 -18 x 1 Rd. Hd	4
36	NS-038-11	Nut 5/16 -18 Hex	4
37	SC-123-94	Cap Screw 3/8-16 x 3/4 Hex Washer	AR
38	NS-038-10	Lock Nut 3/8-16	12
39	00-046429	Plate - Caster Mounting	2
40	SC-123-94	Cap Screw 3/8-16 x 3/4 Hex Washer	AR
41	00-044980	Caster (Front)	2
42	00-442096	Caster - Swivel (Rear)	1
43	SC-123-95	Cap Screw 3/8-16 x 1 Hex Washer Hd	8
44	SC-123-94	Cap Screw 3/8-16 x 3/4 Hex Washer Hd	8
45	NS-038-10	Lock Nut 3/8 -16	8
46	00-041716	Mounting - Shock (ML-44173, ML-44174, ML-44202, & ML-44203)	4
47	SC-123-94	Cap Screw 3/8-16 x 3/4 Hex Washer Hd	8
48	NS-038-11	Nut 5/16-18 Hex (ML-44173, ML-44174, ML-44202, & ML-44203)	4
49	WS-017-16	Washer (ML-44173, ML-44174, ML-44202, & ML-44203)	4
50	WL-003-47	Lockwasher 5/16 Medium (ML-44173, ML-44174, ML-44202, & ML-44203)	4
51	SC-062-07	Cap Screw 5/16-18 x 1/2 Hex Hd. (ML-44173, ML-44174, ML-44202, & ML-44203)	4
52	00-441065-00002	Pump - Vacuum (ML-44173, ML-44174, ML-44202, & ML-44203)	1
53	00-333153	Fitting - Hose 90 Deg. Elbow (ML-44173, ML-44174, ML-44202, & ML-44203)	2
54	00-046863	Motor (1/3 Hp., 50/60 Hz.)	1
55	RR-008-13	Retaining Ring	2
56	00-046235	Plate - Motor Mounting	1
57	00-046279	Bracket Assy. - Caster (RH)	1
58	00-046280	Bracket Assy. - Caster (LH)	1
	00-047328	Bracket - Rear Leg Mounting	2

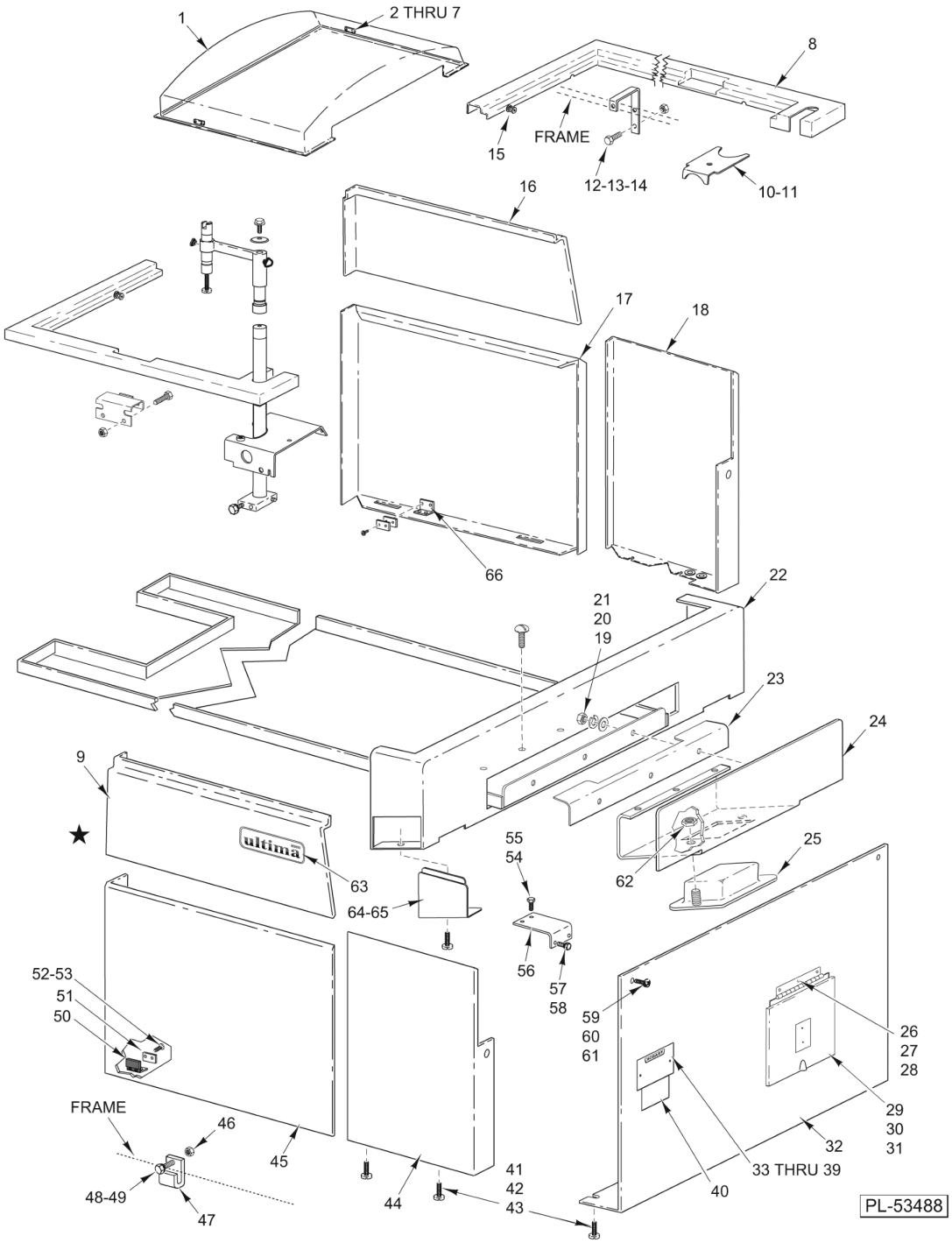
1
2 THRU 7
8
FRAME
15
12-13-14
10-11
16
17
18
66
22
21
20
19
23
24
9
ultima
63
64-65
55
54
56
57
58
62
25
52-53
51
50
59
60
61
26
27
28
FRAME
46
45
48-49
47
44
41
42
43
29
30
31
32
33 THRU 39
40
PL-53488

PANELS

PANELS

ILLUS. PL-53488	PART NO.	NAME OF PART	AMT.
1	00-175468	Canopy	1
2	00-175999	Actuator - Magnetic	2
3	SC-021-02	Mach. Screw 4-40 x 1/2 Slotted Rd. Hd. (SST)	4
4	WL-006-43	Lockwasher #4 Medium	4
5	SC-113-10	Mach. Screw 4-40 x 3/8 Phil. Pan Hd	2
6	WL-003-03	Lockwasher #4 Helical	2
7	00-183396	Plate - Screw Switch	6
8	00-048281	Cover - Top (RH)	1
9	00-175477	Cover - Side (LH)	1
10	00-048278	Trim - Top Cover	1
11	SC-053-41	Mach. Screw 1/4-20 x 1/2 Slotted Truss Hd. (SST)	2
12	00-048270	Bracket - Side Cover	2
13	SC-123-92	Mach. Screw 1/4-20 x 5/8 Hex Washer Hd	4
14	NS-038-08	Lock Nut 1/4 -20 Hex	4
15	SC-053-03	Mach. Screw 10-24 x 3/4 Slotted Truss Hd	5
16	00-175476	Cover - Side (RH)	1
17	00-183555	Panel - Right Side	1
18	00-047326	Panel - Front Right (Incls (2) 00-048190 Solenoids)	1
19	WS-019-10	Washer (SST)	3
20	WL-006-07	Lockwasher #10 Helical (SST)	3
21	NS-011-18	Nut 10-24 Hex (SST)	3
22	00-048193	Panel - Front Upper	1
23	00-048195	Support - Intake Pan Door	1
24	00-048194	Door Assy. - Intake Pan	1
25	00-043009	Handle - Pull	1
26	WL-006-06	Lockwasher #10 Helical (SST)	3
27	SC-119-56	Mach. Screw 10-32 x 1/4 Pan Hd	3
28	00-049318	Plate - Nut	1
29	00-290142-00068	Plate - Warning	1
30	00-046492	Door Assy. - Access (Incls. Hinge & Warning Plate)	1
31	00-046625	Channel - Protector	3
32	00-440018	Front Middle Panel Kit (Incls. Data Plate - See Items 34 Thru 39 When Ordering)	1
33	SD-033-56	Self-Tapping Screw #2 x 3/16 Rd. Hd., Type U (SST)	2
34	00-048273-00001	Plate - Data (R-L) (Must Provide Data When Ordering) (ML-44173)	1
35	00-048273-00002	Plate - Data (L-R) (Must Provide Data When Ordering) (ML-44174)	1
36	00-048273-00007	Plate - Data (Must Provide Data When Ordering) (ML-44193)	1
37	00-048273-00008	Plate - Data (Must Provide Data When Ordering) (ML-44198)	1
38	00-048273-00009	Plate - Data (R-L) (Must Provide Data When Ordering) (ML-44202)	1
39	00-048273-00010	Plate - Data (L-R) (Must Provide Data When Ordering) (ML-44203)	1
40	00-128415	Plate - Patent Numbers	1
41	SC-041-50	Cap Screw 1/4-20 x 1/2 Hex Hd. (SST)	2
42	WS-017-25	Washer	2
43	WL-003-38	Lockwasher 1/4 Helical	2
44	00-047325	Panel - Front Left	1
45	00-183554	Panel - Left Side	1
46	NS-013-02	Nut 1/4-20 Hex	8
47	00-183392	Bracket - Side Panel	4
48	SC-118-19	Cap Screw 1/4-20 x 3/4 Hex Hd	8
49	WL-003-38	Lockwasher 1/4 Helical	8
50	00-175998	Sensor	1
51	00-183396	Plate - Screw Switch	1
52	SC-018-51	Mach. Screw 4-40 x 5/8 Pan	2
53	WS-029-24	Washer - Plain	2
54	WL-006-17	Lockwasher 1/4 Helical (SST)	4
55	SC-041-50	Cap Screw 1/4-20 x 1/2 Hex Hd. (SST)	4

PANELS

ILLUS. PL-53488	PART NO.	NAME OF PART	AMT.
56	00-048019	Bracket - Lower Front Panel	2
57	SC-041-50	Cap Screw 1/4-20 x 1/2 Hex Hd. (SST)	4
58	WL-006-17	Lockwasher 1/4 Helical (SST)	4
59	SC-118-20	Cap Screw 1/4-20 x 1/2 Hex Hd	2
60	WL-003-38	Lockwasher 1/4 Helical	2
61	WS-017-25	Washer	2
62	NS-011-18	Nut 10-24 Hex (SST)	2
63	00-442588	Logo - Ultima	1
64	00-048188	Door - Scale Access	1
65	SC-053-05	Mach. Screw 10-24 x 3/8 Slotted Truss Hd	1
66	00-175995	Bracket - Lower Switch	1
	00-442535	Label - Capacity	1

NOTES

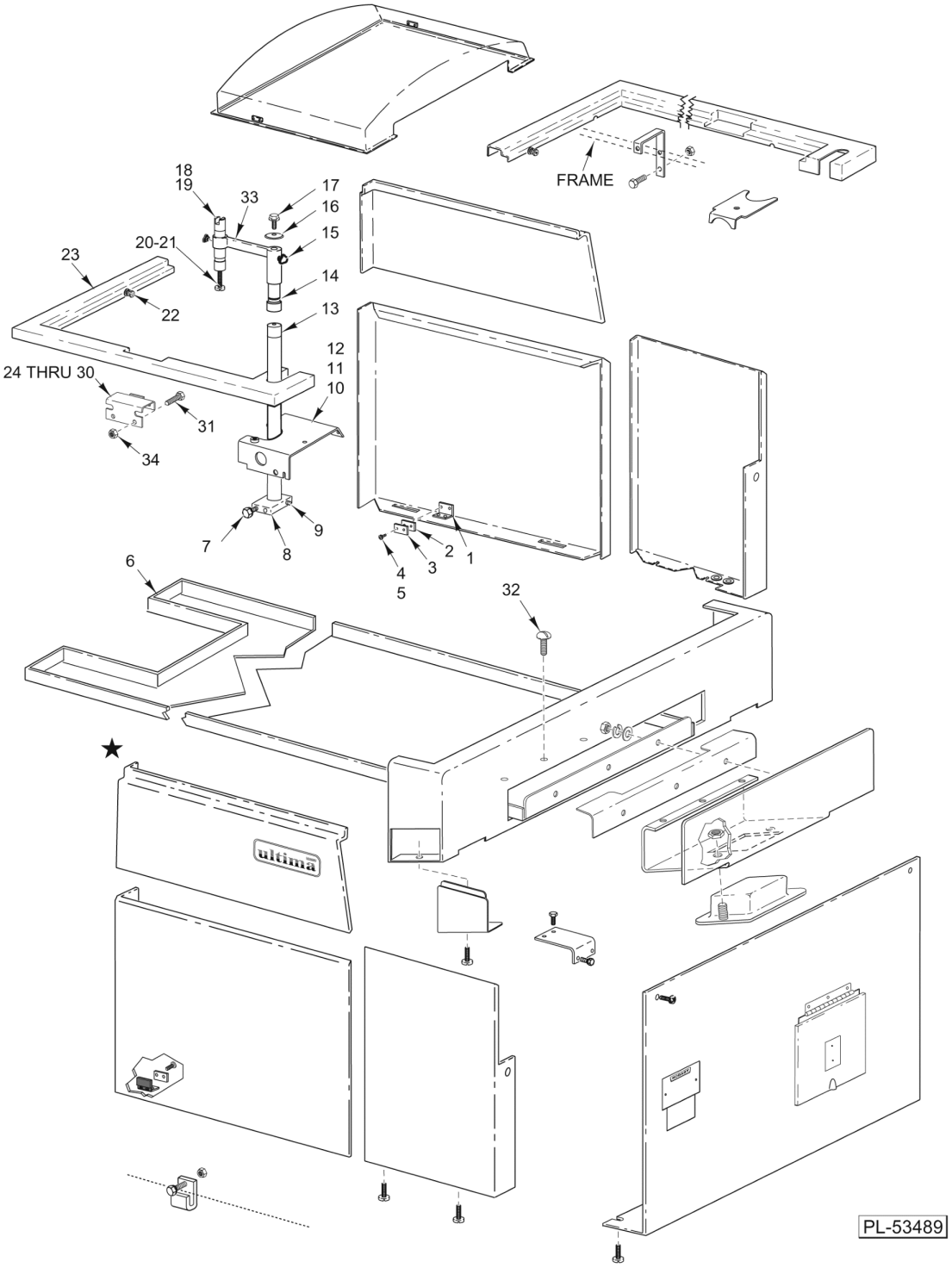

PANELS AND SUPPORT

PANELS AND SUPPORT

ILLUS. PL-53489	PART NO.	NAME OF PART	AMT.
1	00-175995	Bracket - Lower Switch	1
2	00-175999	Actuator - Magnetic	1
3	00-183396	Plate - Screw Switch	1
4	SC-113-10	Mach. Screw 4-40 x 3/8 Phil. Pan Hd	2
5	WL-006-43	Lockwasher #4 Medium	2
6	00-048185	Pan - Intake Trash	1
7	SC-123-94	Cap Screw 3/8-16 x 3/4 Hex Washer Hd	2
8	00-175891	Block - Printer Pivot	2
9	SC-047-41	Set Screw 3/8-16 x 3/8 Socket Hdls., Cup Pt	1
10	SC-123-93	Mach. Screw 1/4-20 x 1 Hex Washer Hd	2
11	00-048276	Bracket - Front Top Cover (RH)	1
12	00-048277	Bracket - Front Top Cover (LH)	1
13	00-049406	Shaft - Pivot Arm	1
14	00-048269	Spacer - Pivot Arm	1
15	00-183538	Knob - Film Centering	2
16	00-049346	Shield - Post Bearing	1
17	SC-053-41	Mach. Screw 1/4-20 x 1/2 Slotted Truss Hd. (SST)	1
18	00-042758	Spacer	1
19	00-041626	Stud (Console Mount) (ML-44173, ML-44174, ML-44202, & ML-44203)	1
20	SC-111-34	Cap Screw 1/4-20 x 4 Hex Hd	1
21	WL-003-38	Lockwasher 1/4 Helical	1
22	SC-053-03	Mach. Screw 10-24 x 3/4 Slotted Truss Hd	5
23	00-048282	Cover - Top (LH)	1
24	00-046947	Cable Assy. - Switch (Canopy) (LH) (Incls. Item 30)	1
25	00-046949	Cable Assy. - Switch (Canopy) (RH) (Incls. Item 30)	1
26	00-047977	Bracket - Canopy Sensor	2
27	SC-113-10	Mach. Screw 4-40 x 3/8 Phil. Pan Hd	4
28	WL-003-03	Lockwasher #4 Helical	4
29	00-255502	Tie - Cable Locking	AR
30	00-175998	Sensor	2
31	SC-123-93	Mach. Screw 1/4-20 x 1 Hex Washer Hd	4
32	SC-053-05	Mach. Screw 10-24 x 3/8 Slotted Truss Hd	3
33	00-043420	Printer Pivot Arm Assy	1
34	NS-038-08	Lock Nut 1/4-20 x 1 Hex Hd	4

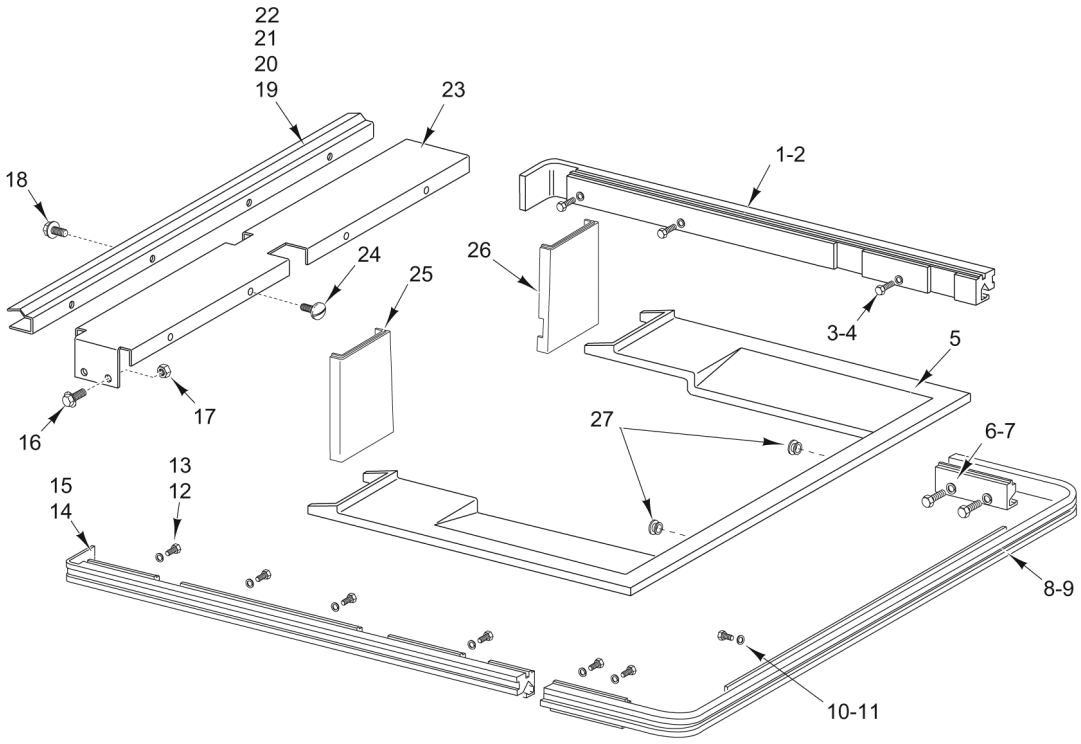

PL-53144

BANDS AND BRACKETS

BANDS AND BRACKETS

ILLUS. PL-53144	PART NO.	NAME OF PART	AMT.
1	00-175576	Band - Right Side	1
2	00-542689	Tape - Plastic (3M #471 Red Vinyl)	AR
3	SC-118-19	Cap Screw 1/4 -20 x 3/4 Hex Hd	3
4	WL-003-38	Lockwasher 1/4 Helical	3
5	00-048616	Cover - Intake	AR
6	SC-117-91	Cap Screw 1/4 -20 x 1 Hex Hd	3
7	WL-003-38	Lockwasher 1/4 Helical	3
8	00-048631	Band - Front	1
9	00-542689	Tape - Plastic (3M #471 Red Vinyl)	AR
10	SC-118-19	Cap Screw 1/4 -20 x 3/4 Hex Hd	2
11	WL-003-38	Lockwasher 1/4 Helical	2
12	SC-118-19	Cap Screw 1/4 -20 x 3/4 Hex Hd	4
13	WL-003-38	Lockwasher 1/4 Helical	4
14	00-175577	Band - Left Side	1
15	00-542689	Tape - Plastic (3M #471 Red Vinyl)	AR
16	SC-123-92	Mach. Screw 1/4 -20 x 5/8 Special Hex Washer Hd	4
17	NS-038-08	Lock Nut 1/4 -20 x 1 Hex Hd	4
18	SC-100-04	Mach. Screw 10-24 x 3/8 Hex Washer Hd	4
19	00-253363	Clamp	1
20	00-046952	Cable Assy. - Switch Film Door (Incls. Item 22)	1
21	00-048242	Strip - Top Trim	1
22	00-175998	Sensor	1
23	00-047974	Bracket Assy. - Rear Cover	1
24	SC-053-05	Mach. Screw 10-24 x 3/8 Slotted Truss Hd. (SST)	4
25	00-175467	Cover - Face L.H.	1
26	00-175466	Cover - Face R.H.	1
27	00-445214-00001	Plug - Cover	2

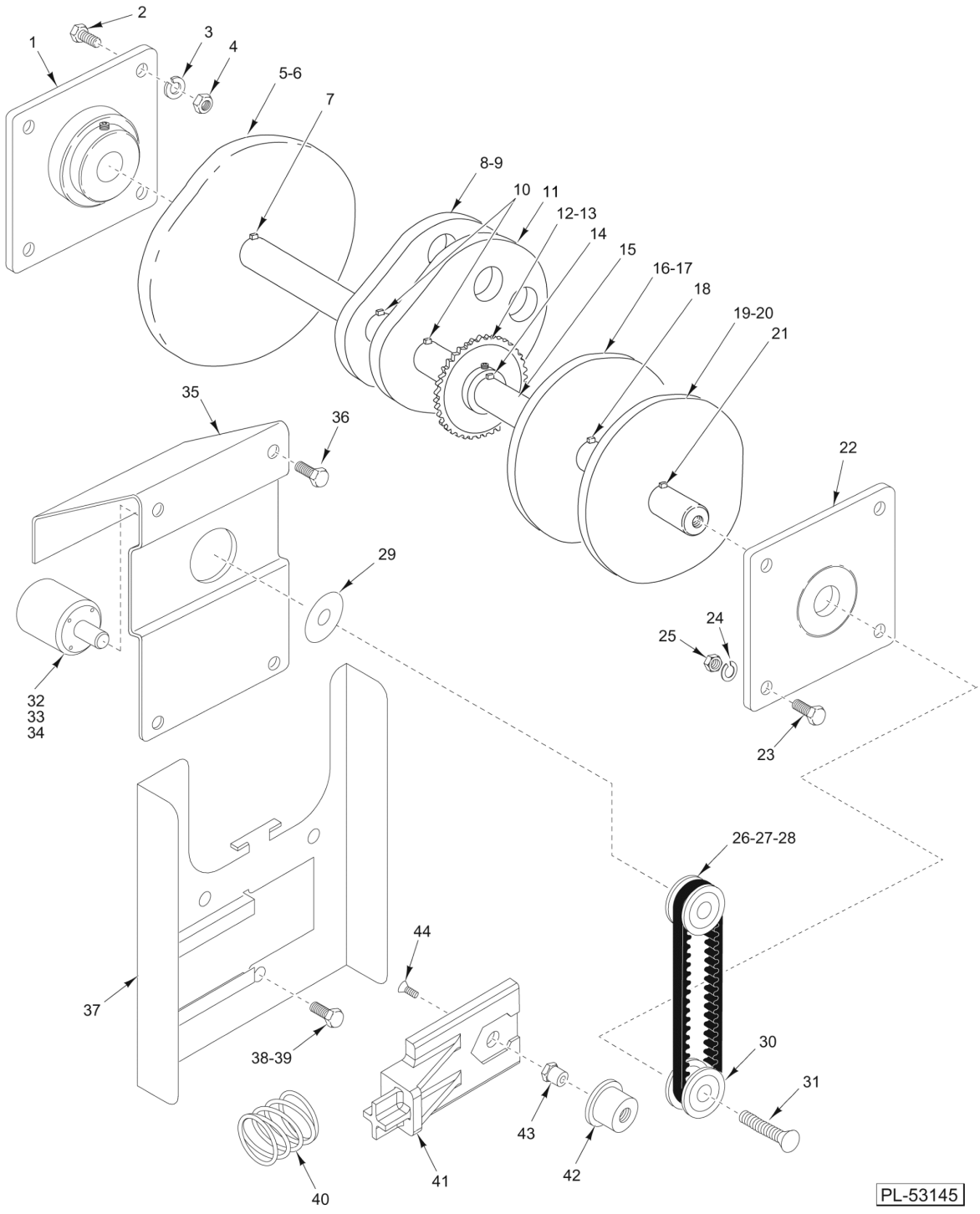

MAIN DRIVE SHAFT UNIT

MAIN DRIVE SHAFT UNIT

ILLUS. PL-53145	PART NO.	NAME OF PART	AMT.
1	00-044230	Bearing - Flanged Ball	1
2	SC-117-97	Cap Screw 1/2 -13 x 1 Hex Hd	4
3	WL-004-11	Lockwasher 1/2 Helical	4
4	NS-013-33	Nut 1/2 -13 Hex	4
5	00-175883	Cam - Output Lever	1
6	SC-047-41	Set Screw 3/8 -16 x 3/8 Hex Hdls., Cup Pt	2
7	KW-004-07	Key - Woodruff	1
8	00-184309	Cam	2
9	SC-047-41	Set Screw 3/8 -16 x 3/8 Hex Hdls., Cup Pt	4
10	KW-004-07	Key - Woodruff	1
11	00-042384	Cam - Split	2
12	00-333551	Sprocket - Main Drive	1
13	SC-047-41	Set Screw 3/8 -16 x 3/8 Hex Hdls., Cup Pt	2
14	KW-004-07	Key - Woodruff	1
15	00-047461	Shaft - Main Drive	1
16	00-175882	Cam - Underfold	1
17	SC-047-41	Set Screw 3/8 -16 x 3/8 Hex Hdls., Cup Pt	2
18	KW-004-07	Key - Woodruff	1
19	00-333221	Cam - Side Clamp	1
20	SC-047-41	Set Screw 3/8 -16 x 3/8 Hex Hdls., Cup Pt	2
21	KW-004-07	Key - Woodruff	1
22	00-044230	Bearing - Flanged Ball	1
23	SC-117-97	Cap Screw 1/2 -13 x 1 Hex Hd	4
24	WL-004-11	Lockwasher 1/2 Helical	4
25	NS-013-33	Nut 1/2 -13 Hex	4
26	00-175197	Pulley (22T)	1
27	SC-116-79	Set Screw 10-32 x 1/4 Hex Hdls., Cup Pt	2
28	00-175567	Belt - Timing (105T) (Encoder)	1
29	00-043849	Washer - Slide	1
30	00-175566	Pulley - Drive	1
31	SC-061-09	Cap Screw 3/8 -16 x 1 1/4 Flat Hd	1
32	00-441761-00002	Encoder - Optical Incremental	1
33	SC-113-37	Mach. Screw 6-32 x 5/8 Phil Pan Hd	4
34	WL-003-09	Lockwasher #6 Helical	4
35	00-048061	NLA - Obsolete--Plate - Encoder Mounting	1
36	SC-123-92	Mach. Screw 1/4 -20 x 5/8 Hex Washer Hd	4
37	00-440528	Bracket - Belt Tensioner	1
38	SC-123-92	Mach. Screw 1/4 -20 x 5/8 Hex Washer Hd	1
39	NS-038-08	Lock Nut 1/4-20 Hex	1
40	00-044200	Spring - Knife Latch	1
41	00-440529	Slide - Tensioner	1
42	00-440531	Roller	1
43	00-440530	Shaft - Roller	1
44	SC-119-95	Mach. Screw 10-24 x 1/2 Phil. Flat Hd	1

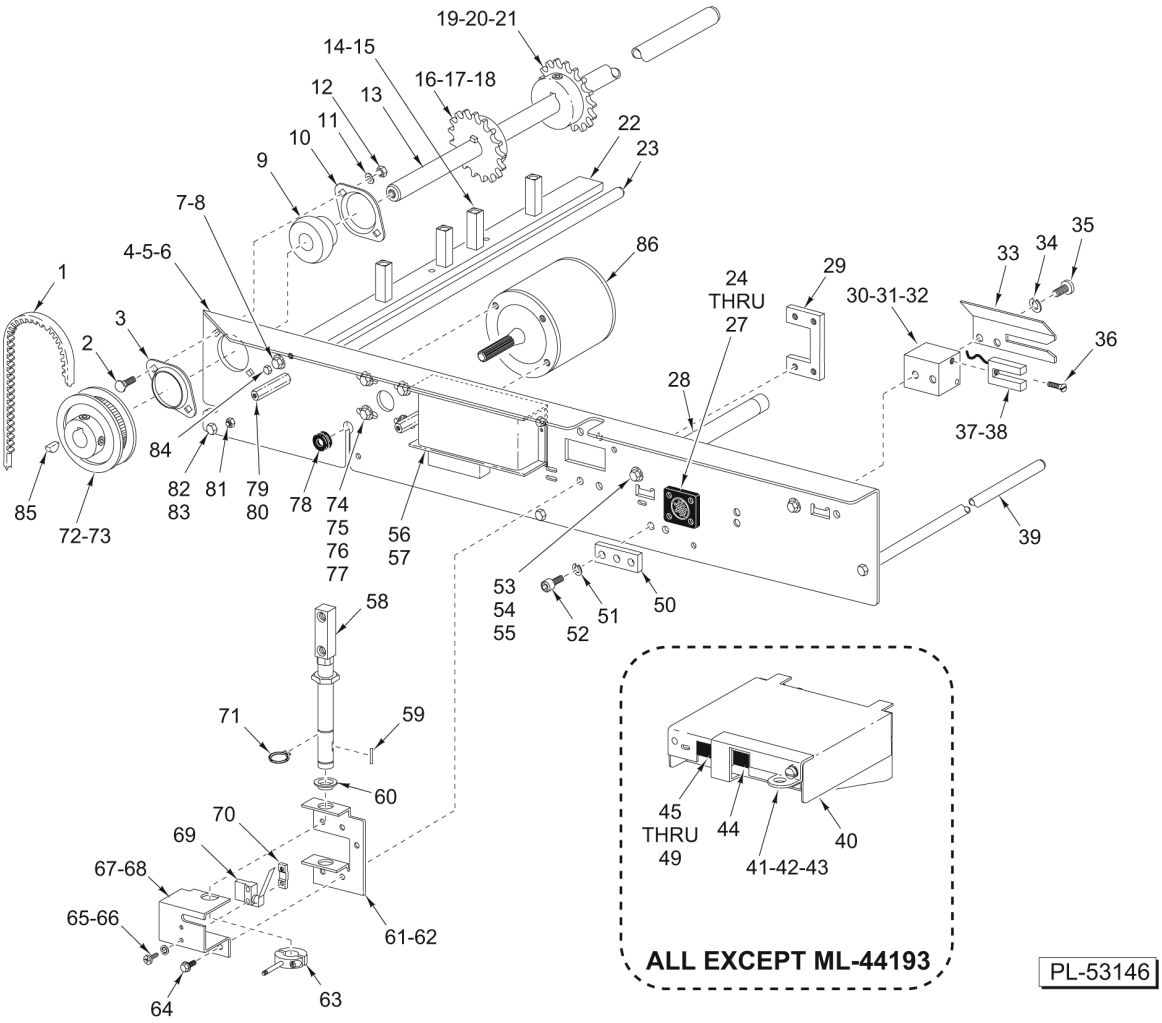
19-20-21
14-15
16-17-18
12
13
11
10
9
22
23
7-8
4-5-6
86
1
3
2
24
THRU
27
29
30-31-32
33
34
35
36
28
37-38
84
82
83
81
79
80
78
74
75
76
77
56
57
85
72-73
53
54
55
52
51
50
39
58
71
59
60
70
69
67-68
65-66
64
63
61-62
45
THRU
49
44
41-42-43
40
ALL EXCEPT ML-44193
PL-53146

INTAKE UNIT

INTAKE UNIT

ILLUS. PL-53146	PART NO.	NAME OF PART	AMT.
1	00-041724	Belt, Timing 177 Tooth, 5/8-inch Wide (Used With Item 72)	1
2	SC-124-34	Bolt - Square Neck 1/4-20 x 1/2 Rd. Hd	2
3	00-086774	Flange - Stamping	1
4	00-048146	Frame - Intake (LH) (ML-44193)	1
5	00-048145	Frame - Intake (LH) (ML-44198, ML-44173, ML-44174, ML-44202, & ML-44203)	1
6	00-048148	Frame - Intake (RH)	1
7	WL-006-17	Lockwasher 1/4 Helical (SST)	2
8	SC-041-50	Cap Screw 1/4-20 x 1/2 Hex Hd. (SST)	2
9	00-086773	Bearing 5/8 Bore	2
10	00-086774	Flange - Stamping	1
11	WL-006-17	Lockwasher 1/4 Helical (SST)	2
12	NS-015-01	Nut 1/4-20 Hex (SST)	2
13	00-442431	Shaft - Driven	1
14	00-048129	Support - Top Cover	4
15	SC-022-73	Mach. Screw 8-32 x 3/4 Flat Hd	4
16	00-175818	Sprocket (17T)	1
17	KW-003-10	Key - 606 Woodruff 3/16 x 3/4	1
18	SC-047-75	Set Screw 1/4-20 x 1/4 Hex Hdls., Cup Pt	2
19	00-175818	Sprocket (17T)	1
20	KW-003-10	Key - 606 Woodruff 3/16 x 3/4	1
21	SC-047-75	Set Screw 1/4-20 x 1/4 Hex Hdls., Cup Pt	2
22	00-048121	Bar - Support (Rear)	1
23	00-048130	Spacer - Side Walls	1
24	00-046942	Harness - Intake (Receptacle	AR
25	00-441148	Harness - Intake/Manual (ML-44193)	1
26	SC-066-03	Mach. Screw 6-32 x 1/2 Phil. Truss Hd	4
27	NS-046-89	Nut Assy. 6-32 Hex KEPS	4
28	00-441069	Stud - Sprint Mount (ML-44193)	2
29	00-044856	Plate - Centering Arm Pivot	2
30	WL-013-11	Lockwasher #10 Internal Shakeproof	2
31	SC-128-12	Mach. Screw 10-24 x 1/4 Phil. Pan Hd. (SST)	2
32	00-048187	Block - Switch Mounting	1
33	00-048186	Bracket - Switch Mounting	1
34	WL-013-11	Lockwasher #10 Internal Shakeproof	2
35	SC-128-12	Mach. Screw 10-24 x 1/4 Phil. Pan Hd. (SST)	2
36	SC-124-80	Mach. Screw 4-40 x 5/16 Slotted Flat Hd. (SST)	1
37	00-046945	Switch - Vane	1
38	00-048532	Harness - Switch (Intake Tray) (Incls. Item 37)	1
39	00-048130	Spacer - Side Walls	2
40	00-048151	Cover - Weigher Board (All Except ML-44193)	1
41	WL-013-11	Lockwasher 10 Internal Shakeproof (All Except ML-44193)	2
42	00-046869	Screw - Sealing 10-24 x 3/8 Slotted Fil. Hd	2
43	00-049228	Bracket - Scale Board Seal (All Except ML-44193)	1
44	SC-111-76	Mach. Screw 4-40 x 5/16 Phil. Pan Hd. (All Except ML-44193)	4
45	00-048407	Board Assy. - Scale Control (All Except ML-44193)	1
46	SC-018-28	Mach. Screw 6-32 x 1/4 Phil Pan Hd. (All Except ML-44193)	4
47	WL-008-01	Lockwasher 6 Internal Shakeproof (All Except ML-44193)	4
48	00-258300-00003	Stand-off (All Except ML-44193)	4
49	00-252289	Plug - Jumper (For 20 Kg Load Cell Use 1 each) (All Except ML-44193)	1
50	00-175790	Block - Conveyor Mounting	1
51	WL-006-17	Lockwasher 1/4 Helical (SST)	2
52	SC-059-28	Cap Screw 1/4-20 x 3/8 Hex Socket Hd	2
53	SC-041-50	Cap Screw 1/4-20 x 1/2 Hex Hd. (ML-44193)	2
54	WL-006-17	Lockwasher 1/4 Medium (ML-44193)	2
55	WS-003-49	Washer (ML-44193)	2

INTAKE UNIT

ILLUS. PL-53146	PART NO.	NAME OF PART	AMT.
56	00-041588	Control Assy. - Motor (Includes Control Board)	1
57	SC-100-04	Mach. Screw 10-24 x 3/8 Hex Washer Hd	2
58	00-048429	Shaft - Pivot Package Guide	2
59	KW-003-03	Key - Woodruff 1/8 x 1/2	2
60	00-043411	Bearing - Nyliner 1/2	2
61	00-048168-00001	Bracket - Pivot Bushing (LH)	1
62	00-048168-00002	Bracket - Pivot Bushing (RH)	1
63	00-440472	Actuator Assy. - Width (Incls. Pin & Screw 8-32 x 1/2 Hex Socket Hd.)	1
64	SC-123-92	Mach. Screw 1/4-20 x 5/8 Hex Washer Hd	2
65	SC-119-24	Mach. Screw 6-32 x 3/4 Phil. Pan Hd	2
66	WL-008-01	Lockwasher #6 Internal Shakeproof	2
67	00-255502	Tie - Cable Locking	4
68	00-440450	Bracket - Width Switch	1
69	00-440653	Harness - Switch Wide (Incls. Switch)	1
70	00-044528	Plate - Nut	1
71	RR-004-05	Retaining Ring	2
72	00-442414	Pulley - 72 Groove (Used With Item 1)	4
73	SC-124-34	Bolt - Square Neck 1/4-20 x 1/2 Rd. Hd	2
74	WL-006-17	Lockwasher 1/4 Medium (All Except ML-44193)	4
75	WS-003-49	Washer (All Except ML-44193)	4
76	SC-041-50	Cap Screw 1/4 -20 x 1/2 Hex Hd. (All Except ML-44193)	4
77	SC-100-08	Mach. Screw 1/4-20 x 3/8 Hex Washer Hd. (ML-44193)	4
78	FE-023-52	Bushing - Elec. Split	1
79	00-048162	Standoff - Motor & Belt Shroud	2
80	SC-100-04	Mach. Screw 10-24 x 3/8 Hex Washer Hd	2
81	NS-031-07	Stop Nut 8-32 Hex	5
82	SC-041-50	Cap Screw 1/4-20 x 1/2 Hex Hd. (SST)	3
83	WL-006-17	Lockwasher 1/4 Helical (SST)	3
84	SC-100-04	Mach. Screw 10-24 x 3/8 Hex Washer Hd	2
85	KW-003-10	Key - 606 Woodruff 3/16 x 3/4	2
86	00-041784	Motor - Brushless (DC)	1
	00-183934-00003	Tube - Plastic Shrinkable 3/32 x 4 ft. (Cut to Length)	AR
	00-183934-00006	Tube - Plastic Shrinkable 1/4 x 4 Ft. (Cut to Length)	AR

NOTES

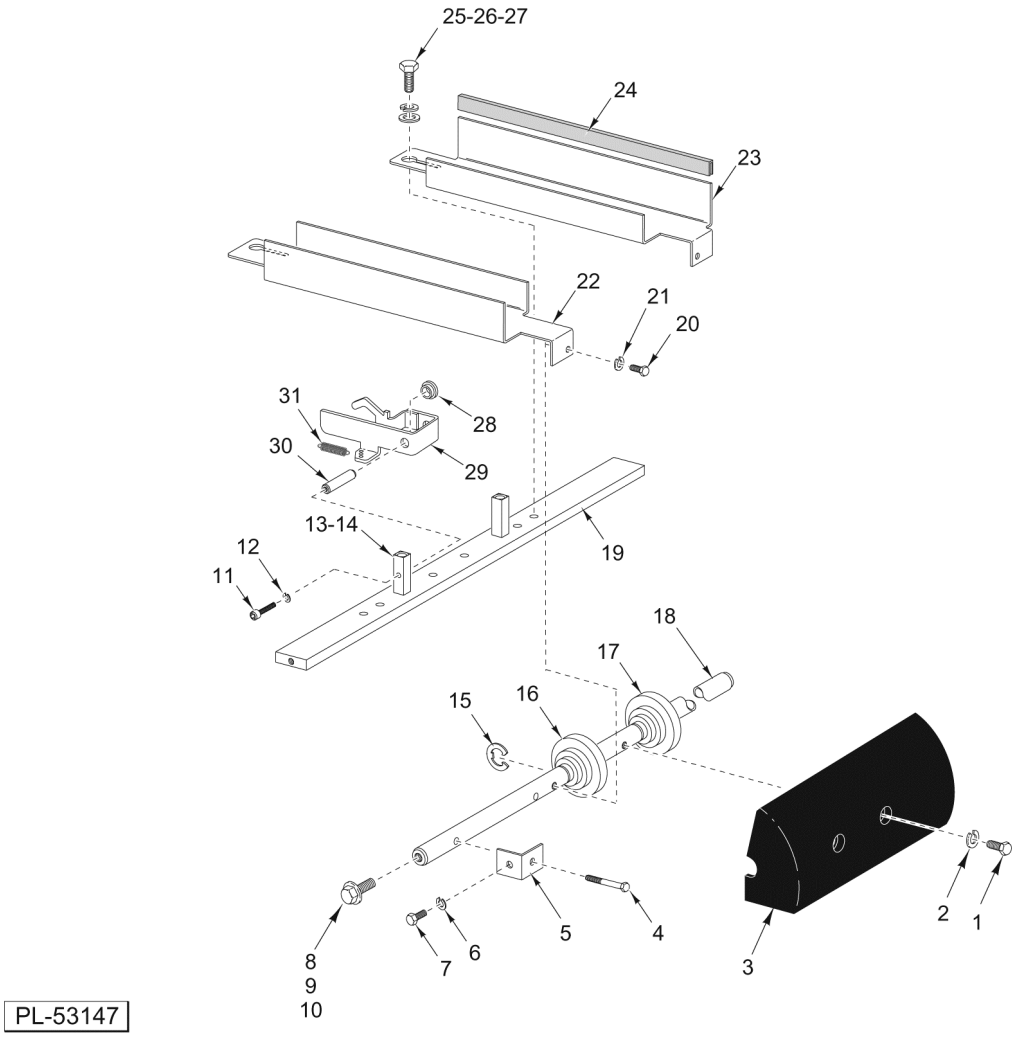

INTAKE PUSHER UNIT
(ML-44198, ML-44173, ML-44174, ML-44202, & ML-44203)

INTAKE PUSHER UNIT
(ML-44198, ML-44173, ML-44174, ML-44202, & ML-44203)

ILLUS. PL-53147	PART NO.	NAME OF PART	AMT.
1	SC-120-70	Cap Screw 1/4 -20 x 15/8 Hex Socket Hd	2
2	WL-008-17	Lockwasher 1/4 Internal	2
3	00-048183	Guard - Inner Pusher	1
4	SC-112-31	Cap Screw 1/4 -20 x 21/4 Hex Hd	2
5	00-048642	Bracket - Chain Tensioner	2
6	WL-006-17	Lockwasher 1/4 Helical (SST)	2
7	SC-041-50	Cap Screw 1/4 -20 x 1/2 Hex Hd	2
8	SC-041-50	Cap Screw 1/4 -20 x 1/2 Hex Hd	2
9	WL-006-17	Lockwasher 1/4 Helical (SST)	2
10	WS-003-49	Washer 0.266 x 0.563 x 0.062 (SST)	2
11	SC-089-77	Cap Screw 8-32 x 3/4 Hex Socket Hd	2
12	WL-013-08	Lockwasher #8 Internal Shakeproof	2
13	SC-022-73	Mach. Screw 8-32 x 3/4 Flat Hd	2
14	00-048122	Support - Cover & Pivot Shaft	2
15	RR-008-13	Retaining Ring	4
16	00-048169	Wheel - Idler	1
17	00-048169	Wheel - Idler	1
18	00-049887	Shaft - Idler	1
19	00-048120	Bar - Support (Front)	1
20	SC-041-50	Cap Screw 1/4 -20 x 1/2 Hex Hd	2
21	WL-006-17	Lockwasher 1/4 Helical (SST)	2
22	00-048154	Channel - Chain (LH)	1
23	00-048155	Channel - Chain (RH)	1
24	00-048090-00005	Protector - Edge	2
25	SC-067-07	Mach. Screw 10-24 x 1/2 Hex Hd. (SST)	2
26	WL-013-11	Lockwasher #10 Internal Shakeproof	2
27	WS-019-02	Washer	2
28	00-041488	Bearing - Nyliner	2
29	00-048163	Actuator - Assy. (Length Switch)	1
30	00-048140	Shaft - Switch Actuator (Length)	1
31	00-049864	Spring - Intake Gripper	1
	00-183934-00003	Tube - Plastic Shrinkable 3/32 x 4 ft. (Cut to Length)	AR
	00-183934-00006	Tube - Plastic Shrinkable 1/4 x 4 Ft. (Cut to Length)	AR

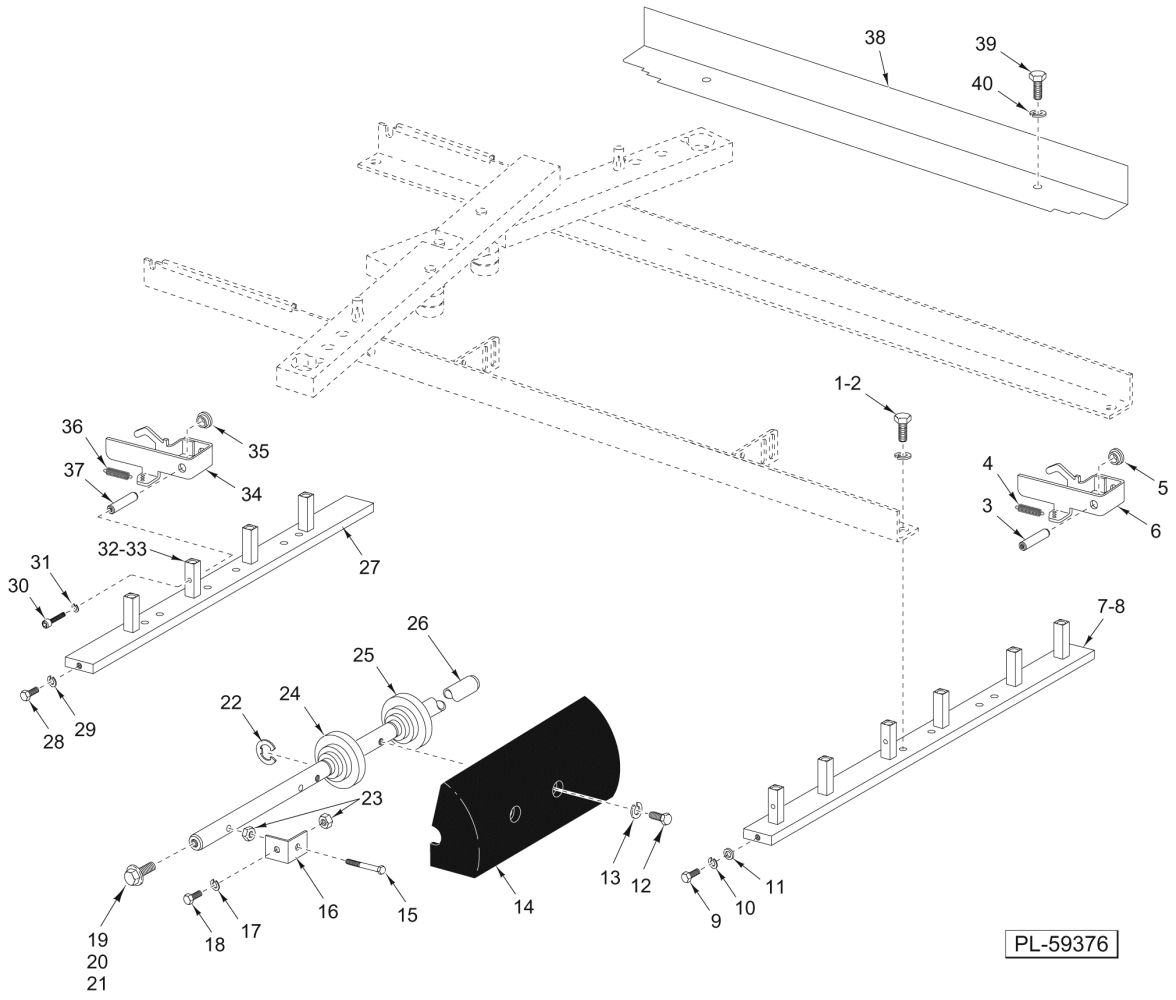

INTAKE PUSHER UNIT (ML-44193)

INTAKE PUSHER UNIT (ML-44193)

ILLUS. PL-59376	PART NO.	NAME OF PART	AMT.
1	SC-067-07	Mach. Screw 10-24 x 1/2 Hex Hd. (SST)	6
2	WL-013-11	Lockwasher #10 Internal Shakeproof	6
3	00-048140	Shaft - Switch Actuator (Length)	1
4	00-049864	Spring - Intake Gripper	1
5	00-041488	Bearing - Nyliner	2
6	00-048163	Actuator - Assy. (Length Switch)	1
7	00-048120	Bar - Support (Front)	1
8	00-255502	Tie - Cable Locking	2
9	SC-041-50	Cap Screw 1/4-20 x 1/2 Hex Hd. (SST)	2
10	WL-006-17	Lockwasher 1/4 Helical (SST)	2
11	WS-003-49	Washer 0.266 x 0.563 x 0.062 (SST)	2
12	SC-120-70	Cap Screw 1/4-20 x 1-5/8 Hex Socket Hd	2
13	WL-008-17	Lockwasher 1/4 Internal	2
14	00-048183	Guard - Inner Pusher	1
15	SC-112-31	Cap Screw 1/4-20 x 21/4 Hex Hd	2
16	00-048642	Bracket - Chain Tensioner	2
17	WL-006-17	Lockwasher 1/4 Helical (SST)	2
18	SC-041-50	Cap Screw 1/4-20 x 1/2 Hex Hd. (SST)	2
19	SC-041-50	Cap Screw 1/4-20 x 1/2 Hex Hd. (SST)	2
20	WL-006-17	Lockwasher 1/4 Helical (SST)	2
21	WS-003-49	Washer 0.266 x 0.563 x 0.062 (SST)	2
22	RR-008-13	Retaining Ring	4
23	NS-015-01	Nut 1/4-20 Hex (SST)	4
24	00-048169	Wheel - Idler	1
25	00-048169	Wheel - Idler	1
26	00-049887	Shaft - Idler	1
27	00-048120	Bar - Support (Front)	1
28	SC-041-50	Cap Screw 1/4-20 x 1/2 Hex Hd. (SST)	2
29	WL-006-17	Lockwasher 1/4 Helical (SST)	2
30	SC-089-77	Cap Screw 8-32 x 3/4 Soc. Hd	4
31	WL-013-08	Lockwasher #8 Internal Shakeproof	4
32	SC-022-73	Mach. Screw 8-32 x 3/4 Flat Hd	10
33	00-048122	Support - Cover & Pivot Shaft	10
34	00-048163	Actuator - Assy. (Length Switch)	1
35	00-041488	Bearing - Nyliner	2
36	00-049864	Spring - Intake Gripper	1
37	00-048140	Shaft - Switch Actuator (Length)	1
38	00-441706	Angle - Support	2
39	SC-067-07	Mach. Screw 10-24 x 1/2 Hex Hd. (SST)	4
40	WL-013-11	Lockwasher #10 Internal Shakeproof	4
	00-183934-00003	Tube - Plastic Shrinkable 3/32 x 4 ft. (Cut to Length)	AR
	00-183934-00006	Tube - Plastic Shrinkable 1/4 x 4 Ft. (Cut to Length)	AR

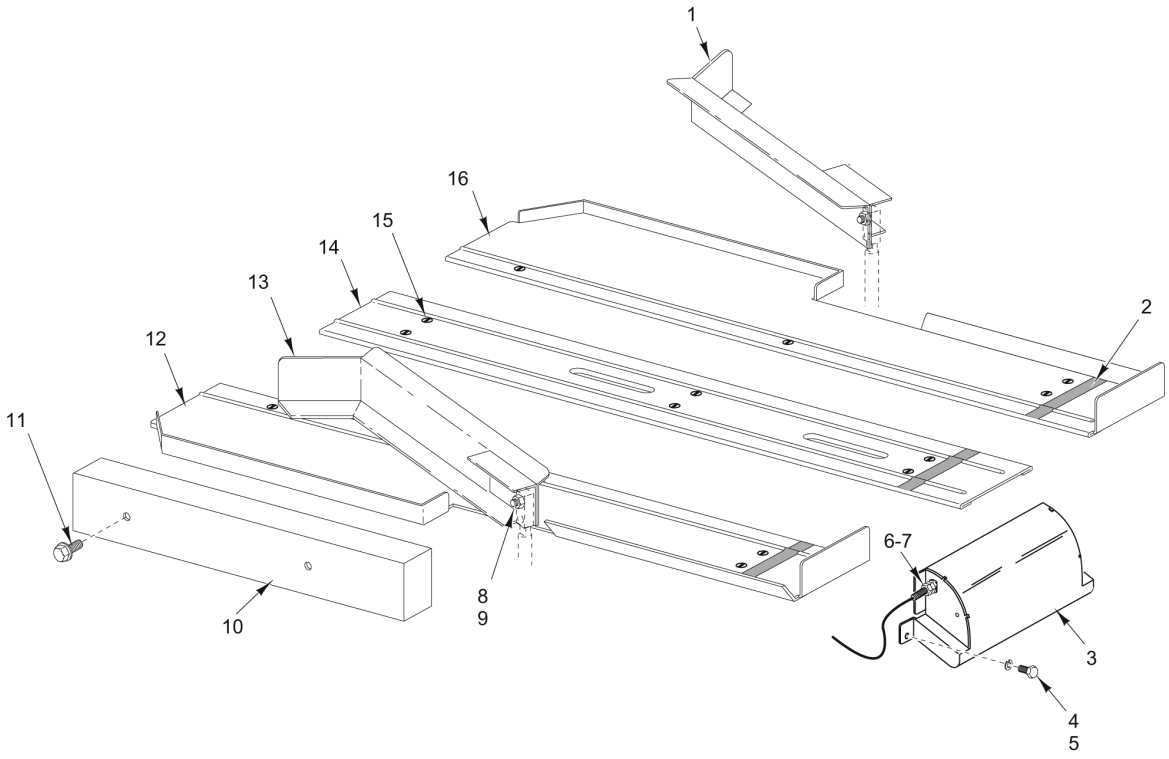

INTAKE AND COVERS (ML-44193)

INTAKE AND COVERS (ML-44193)

ILLUS. PL-59377	PART NO.	NAME OF PART	AMT.
1	00-048131	Arm Assy. - Centering (RH)	1
2	00-542689	Tape - Plastic (3M #471 Red Vinyl)	1
3	00-049880	Cover Assy. - Pusher	1
4	SC-041-50	Cap Screw 1/4-20 x 1/2 Hex Hd. (SST)	2
5	WL-006-17	Lockwasher 1/4 Helical (SST)	2
6	00-048531	Harness - Home Switch (Incls. Item 7)	1
7	00-446022	Sensor - Position	1
8	SC-122-06	Bolt 1/4-20 x 1 1/4 Sq. Neck, Rd. Hd	4
9	NS-038-04	Lock Nut 1/4-20 Hex	4
10	00-048161	Shroud - Belt & Motor Control	1
11	SC-100-04	Mach. Screw 10-24 x 3/8 Hex Washer Hd	2
12	00-441061	Cover Assy. - Top (LH)	1
13	00-048134	Arm Assy. - Centering (LH)	1
14	00-441051	Cover - Intake Center	1
15	SC-022-08	Mach. Screw 8-32 x 3/8 Flat Hd	14
16	00-441062	Cover Assy. - Top (RH)	1
	00-440608	Guide - 7/25 (Not Shown)	2

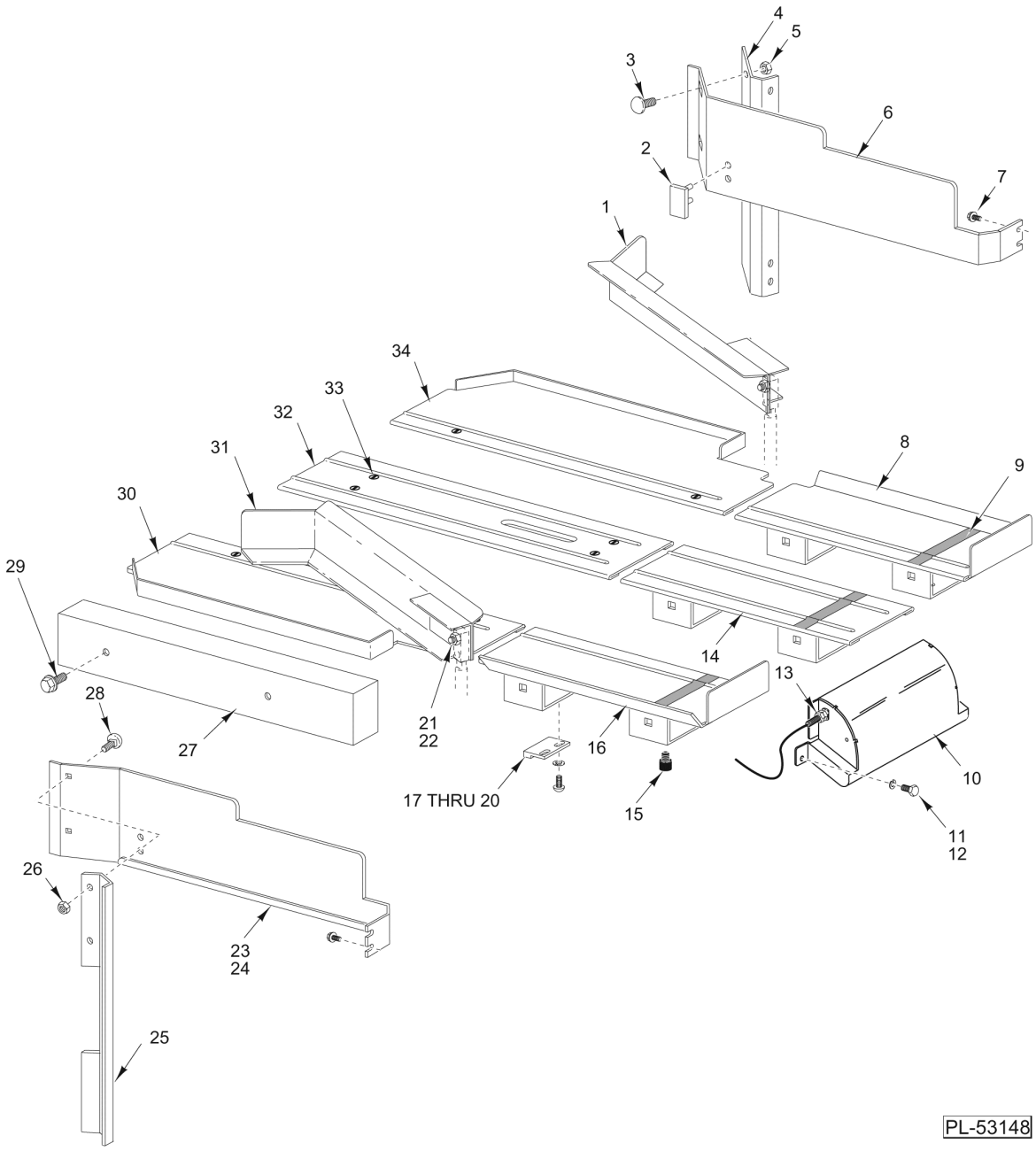

INTAKE PLATTERS AND COVERS
(ML-44173, ML-44174, ML-44198, ML-44202, & ML-44203)

INTAKE PLATTERS AND COVERS
(ML-44173, ML-44174, ML-44198, ML-44202, & ML-44203)

ILLUS. PL-53148	PART NO.	NAME OF PART	AMT.
1	00-048131	Arm Assy. - Centering (RH)	1
2	00-043452	Pad - Gripper (Gray) (Set of 15)	1
3	SC-124-34	Bolt - Square Neck 1/4 -20 x 1/2 Rd. Hd	2
4	00-048054	Bracket - Support (RH)	1
5	NS-038-08	Lock Nut 1/4 -20 x 1 Hex	2
6	00-048057	Shield - Intake (RH)	1
7	SC-100-08	Mach. Screw 1/4 -20 x 3/8 Hex Washer Hd. Whiz-Loc	4
8	00-049892	Platter Assy. - RH Section	1
9	00-542689	Tape - Plastic (3M #471 Red Vinyl)	1
10	00-049880	Cover Assy. - Pusher	1
11	SC-041-50	Cap Screw 1/4 -20 x 1/2 Hex Hd	2
12	WL-006-17	Lockwasher 1/4 Helical (SST)	2
13	00-446022	Sensor - Position	1
14	00-048102	Platter Assy. - Center Section	1
15	00-043319	Mount - Platter	AR
16	00-049890	Platter Assy. - LH Section	1
17	00-183396	Plate - Screw Switch	3
18	00-175999	Actuator - Magnetic	3
19	WL-013-02	Lockwasher #4 Internal Shakeproof (SST)	6
20	SC-021-02	Mach. Screw 4-40 x 1/2 Slotted Rd. Hd. (SST)	6
21	SC-122-06	Bolt 1/4 -20 x 11/4 Sq. Neck, Rd. Hd	4
22	NS-038-04	Lock Nut 1/4 -20 Hex	4
23	00-048058	Shield - Intake (LH)	1
24	00-043452	Pad - Gripper (Gray) (Set of 15)	1
25	00-048055	Bracket - Support (LH)	1
26	NS-038-08	Lock Nut 1/4 -20 x 1 Hex	2
27	00-048161	Shroud - Belt & Motor Control	1
28	SC-124-34	Bolt - Square Neck 1/4 -20 x 1/2 Rd. Hd	2
29	SC-100-04	Mach. Screw 10-24 x 3/8 Hex Washer Hd	2
30	00-049894	Cover Assy. - Top (LH)	1
31	00-048134	Arm Assy. - Centering (LH)	1
32	00-048128	Cover - Intake Center	1
33	SC-022-08	Mach. Screw 8-32 x 3/8 Flat Hd	8
34	00-049896	Cover Assy. - Top (RH)	1
	00-440608	Guide 7/25	2
	00-048531	Harness - Home Switch (Incls. Item 13)	1
	00-254817	Pin - Contact (Use With Item 13)	2

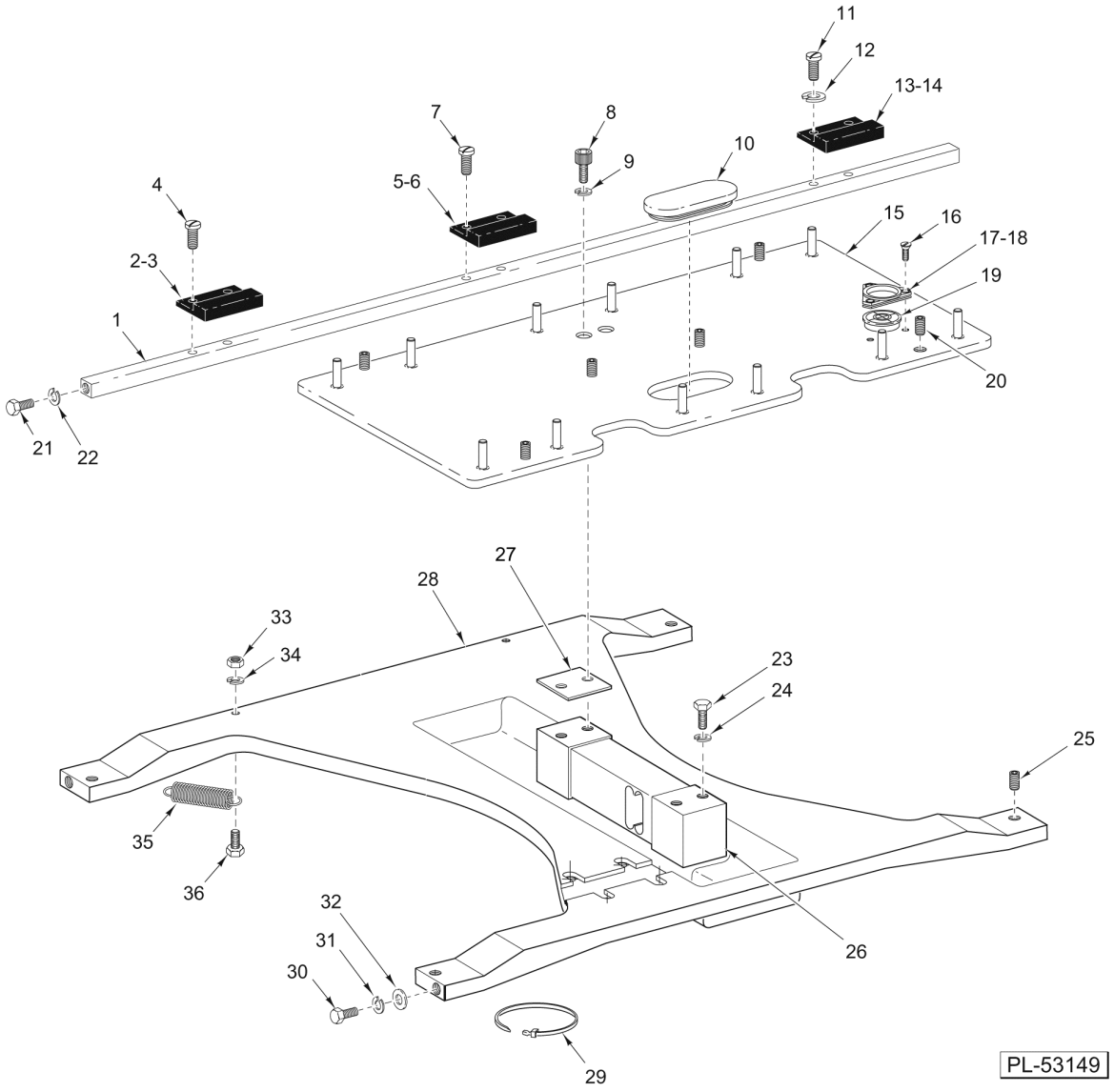

LOADCELL SUPPORT UNIT
(ML-44198, ML-44173, ML-44174, ML-44202, & ML-44203)

LOADCELL SUPPORT UNIT
(ML-44198, ML-44173, ML-44174, ML-44202, & ML-44203)

ILLUS. PL-53149	PART NO.	NAME OF PART	AMT.
1	00-048636	Bar - Sensor Mounting	1
2	00-175998	Sensor - Switch (LH)	1
3	00-183396	Plate - Screw Switch	1
4	SC-021-02	Mach. Screw 4-40 x 1/2 Slotted Rd. Hd. (SST)	2
5	00-175998	Sensor - Switch (CRT)	1
6	00-183396	Plate - Screw Switch	1
7	SC-021-02	Mach. Screw 4-40 x 1/2 Slotted Rd. Hd. (SST)	2
8	SC-110-98	Cap Screw 1/4-20 x 3/4 Hex Hd	2
9	WL-008-17	Lockwasher 1/4 Internal	2
10	00-048699	Cover - Load Cell Mounting	1
11	SC-021-02	Mach. Screw 4-40 x 1/2 Slotted Rd. Hd. (SST)	2
12	WL-013-02	Lockwasher #4 Internal Shakeproof (SST)	6
13	00-183396	Plate - Screw Switch	1
14	00-175998	Sensor - Switch (RH)	1
15	00-048757	Support Assy. - Platter	1
16	SC-124-80	Mach. Screw 4-40 x 5/16 Slotted Flat Hd. (SST)	3
17	00-047276	Flange (Level)	1
18	00-049040	Gasket - Level Flange	1
19	00-043112	Level - Spirit	1
20	SC-124-35	Set Screw 1/4-20 x 1/2 Hdls	6
21	SC-068-14	Mach. Screw 8-32 x 3/8 Hex Hd	2
22	WL-013-08	Lockwasher #8 Internal Shakeproof	2
23	SC-120-70	Cap Screw 1/4-20 x 1-5/8 Hex Socket Hd	2
24	WL-008-17	Lockwasher 1/4 Int	2
25	SC-055-25	Set Screw 1/4-20 x 1 Hdls	4
*26	00-442777	Loadcell - 20 kg (Multiple Range)	1
27	00-048153	Spacer - Loadcell	1
28	00-048209	Support - Loadcell	1
29	00-255502	Tie - Cable Locking	AR
30	SC-041-50	Cap Screw 1/4-20 x 1/2 Hex Hd. (SST)	4
31	WL-006-17	Lockwasher 1/4 Helical (SST)	4
32	WS-003-49	Washer 0.266 x 0.563 x 0.062 (SST)	4
33	NS-011-12	Nut 8-32 Hex	2
34	WL-013-08	Lockwasher #8 Internal Shakeproof	2
35	00-175798	Spring - Package Width	2
36	SC-089-77	Cap Screw 8-32 x 3/4 Hex Socket Hd	2
	00-048533	Harness - Platter Switch (LH) (Incls. Item 2)	1
	00-048534	Harness - Platter Switch (CRT) (Incls. Item 5)	1
	00-048535	Harness - Platter Switch (RH) (Incls. Item 14)	1
	00-254817	Pin - Contact (Use With Items 2, 5, & 14)	AR

* This Part may Require Jumper Plug 00-252289 on Scale Control Board Assembly

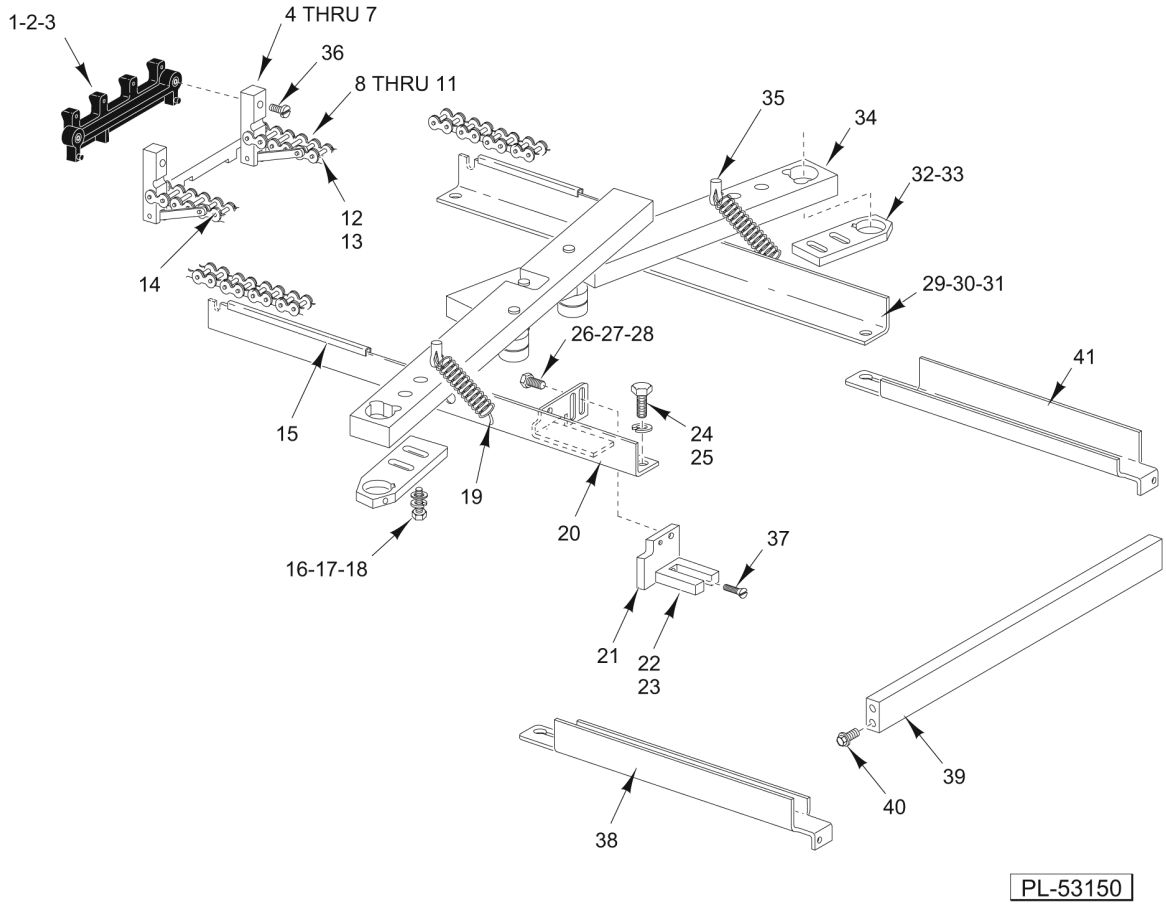

INTAKE UNIT
(LOWER PORTION)
(ML-44198, ML-44173, ML-44174, ML-44202, & ML-44203)

INTAKE UNIT
(LOWER PORTION)
(ML-44198, ML-44173, ML-44174, ML-44202, & ML-44203)

ILLUS. PL-53150	PART NO.	NAME OF PART	AMT.
1	00-049746	Pusher Assy. (Narrow) (5 3/4")	2
*2	00-443644	Pusher Assy. (Wide) (7 1/4") (68 Degree Angle)	2
3	SC-124-79	Set Screw 4-40 x 1/4 Hdls., Cone Pt	8
4	00-175775	Link - Pusher	2
5	RP-002-01	Roll Pin 5/32 Dia. x 3/8 Lg	2
6	00-048142	Arm - Pusher Mounting	2
7	00-048170	Pusher Arm & Link Assy. (Incls. Items 4, 5, & 6)	2
8	00-440662	Intake Chain SST (RH) (Incls. Items 7, 9, & 12)	1
9	00-440664	Chain - Intake	4
10	00-440665	Chain - Intake	4
11	00-175770	Spacer - Pusher Arm	4
12	00-440663	Link - Connecting #40 (Double Strand)	8
13	00-175771	Spacer - Pusher Link	4
14	00-440661	Intake Chain Assy. (LH) (Incls. Items, 7, & 9 thru 13)	1
15	00-048090-00005	Protector - Edge	2
16	SC-041-01	Cap Screw 1/4 -20 x 3/4 Hex Hd	4
17	WL-006-17	Lockwasher 1/4 Helical (SST)	4
18	WS-003-49	Washer 0.266 x 0.563 x 0.062 (SST)	4
19	00-175798	Spring - Package Width	2
20	00-048158	Rail & Length Bracket	1
21	00-048139	Plate - Sensor Mounting	1
22	00-048530	Harness - Package Length (Incls. Item 23)	1
23	00-046945	Switch - Vane (For Service Switch Only)	1
24	SC-067-07	Mach. Screw 10-24 x 1/2 Hex Hd. (SST)	4
25	WL-013-11	Lockwasher #10 Internal Shakeproof	4
26	SC-067-07	Mach. Screw 10-24 x 1/2 Hex Hd. (SST)	2
27	WL-013-11	Lockwasher #10 Internal Shakeproof	2
28	WS-019-06	Washer	2
29	00-048157	Rail - Chain Support (R.H.)	1
30	SC-067-07	Mach. Screw 10-24 x 1/2 Hex Hd. (SST)	4
31	WL-013-11	Lockwasher #10 Internal Shakeproof	4
32	SC-047-75	Set Screw 1/4 -20 x 1/4 Soc. Hdls. Cup Pt	1
33	00-184046	Plate - Adjusting (Incls. Item 32)	2
34	00-044700	Lever Assy. (Incls. Rollers)	2
35	PG-011-15	Groove Pin 3/16	2
36	SC-112-39	Mach. Screw 8-32 x 3/4 Slotted Rd. Hd. (SST)	4
37	SC-124-80	Mach. Screw 4-40 x 5/16 Slotted Flat Hd. (SST)	1
38	00-048154	Channel - Chain (LH)	1
39	00-442410	Bar - Front Mounting	1
40	SC-100-12	Mach. Screw 5/16-18 x 3/4 Hex Washer Hd	4
41	00-048155	Channel - Chain (RH)	1
	00-183934-00003	Tube - Plastic Shrinkable 3/32 x 4 ft. (Cut to Length)	1
	00-183934-00006	Tube - Plastic Shrinkable 1/4 x 4 Ft. (Cut to Length)	1

* Uase Wide Pusher Only as Direct Replacement for wide Pusher Machines.

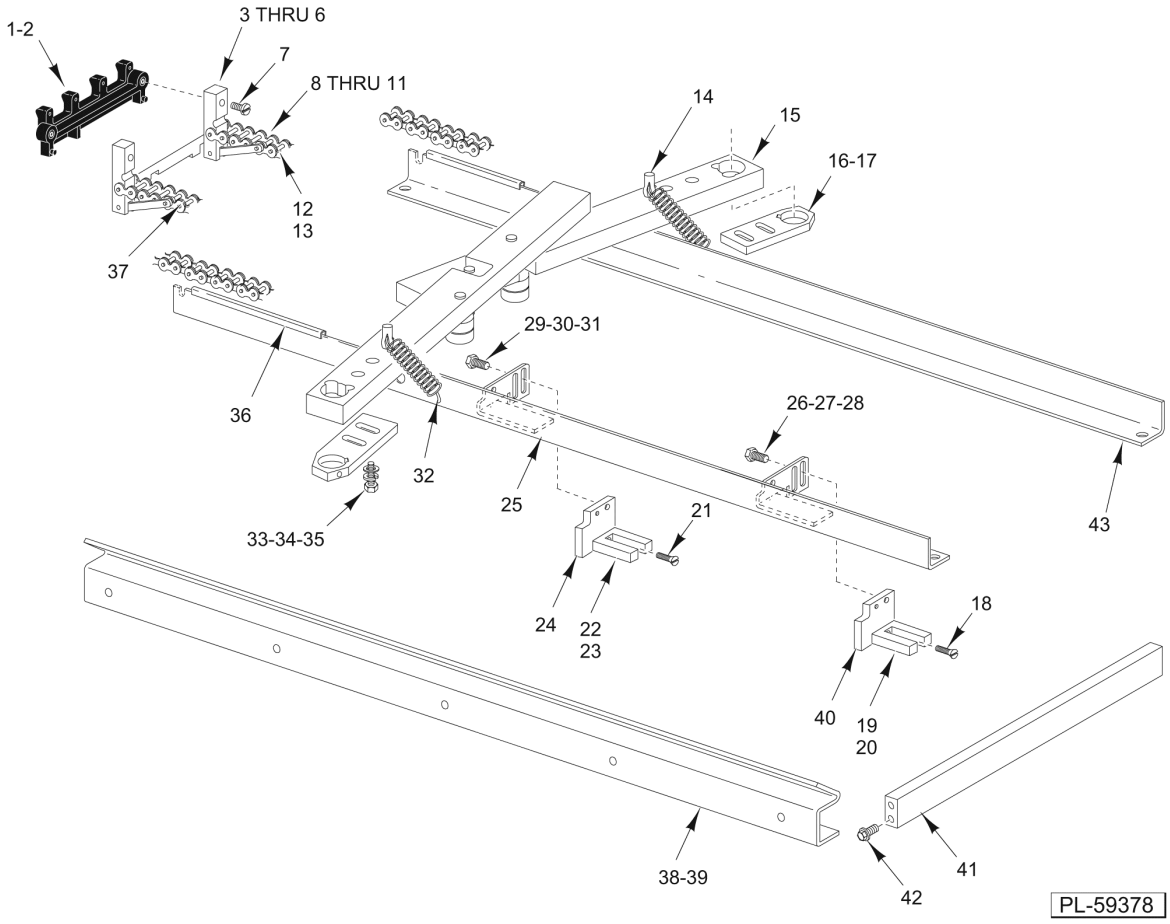

INTAKE UNIT
(LOWER PORTION) (ML-44193)

INTAKE UNIT
(LOWER PORTION) (ML-44193)

ILLUS. PL-59378	PART NO.	NAME OF PART	AMT.
1	00-443644	Pusher Assy. (Incls. Item 2)	2
2	SC-124-79	Set Screw 4-40 x 1/4 Hdls., Cone Pt	8
3	00-175775	Link - Pusher	2
4	RP-002-01	Roll Pin 5/32 Dia. x 3/8 Lg	2
5	00-048142	Arm - Pusher Mounting	2
6	00-048170	Pusher Arm & Link Assy. (Incls. Items 3, 4, & 5)	2
7	SC-112-39	Mach. Screw 8-32 x 3/4 Slotted Rd. Hd. (SST)	4
8	00-440662	Chain - Intake Assy (SST) (RH) (Incls. Items 6 & 9 thru 13)	1
9	00-440664	Chain - Intake	4
10	00-440665	Chain - Intake	4
11	00-175770	Spacer - Pusher Arm	4
12	00-440663	Link - Connecting #40 (Double Strand)	8
13	00-175771	Spacer - Pusher Link	4
14	PG-011-15	Groove Pin 3/16	2
15	00-044700	Lever Assy. (Incls. Roller)	2
16	00-184046	Plate - Adjusting	2
17	SC-047-75	Set Screw 1/4 -20 x 1/4 Socket Hdls., Cup Pt	2
18	SC-124-80	Mach. Screw 4-40 x 5/16 Slotted Flat Hd. (SST)	1
19	00-048530	Harness (Package Sense Switch) (Incls. Item 20)	1
20	00-046945	Switch - Vane	1
21	SC-124-80	Mach. Screw 4-40 x 5/16 Slotted Flat Hd. (SST)	1
22	00-048530	Harness (Package Length) (Incls. Item 23)	1
23	00-046945	Switch - Vane	1
24	00-048139	Plate - Sensor Mounting	1
25	00-441054	Rail - Chain Support (LH)	1
26	SC-067-07	Mach. Screw 10-24 x 1/2 Hex Hd. (SST)	2
27	WL-013-11	Lockwasher #10 Internal Shakeproof	2
28	WS-019-06	Washer	2
29	SC-067-07	Mach. Screw 10-24 x 1/2 Hex Hd. (SST)	2
30	WL-013-11	Lockwasher #10 Internal Shakeproof	2
31	WS-019-06	Washer	2
32	00-175798	Spring - Package Width	2
33	SC-041-01	Cap Screw 1/4-20 x 3/4 Hex Hd. (SST)	4
34	WL-006-17	Lockwasher 1/4 Helical (SST)	4
35	WS-003-49	Washer 0.266 x 0.563 x 0.062 (SST)	4
36	00-048090-00005	Protector - Edge	2
37	00-440661	Intake Chain Assy. (SST) (LH) (Incls. Items 6 & 9 thru 13)	1
38	00-048196	Rail - Pan (LH)	1
39	00-048197	Rail - Pan (RH)	1
40	00-048139	Plate - Sensor Mounting	1
41	00-442410	Bar - Front Mounting	1
42	SC-100-12	Mach. Screw 5/16-18 x 3/4 Hex Washer Hd	4
43	00-441052	Rail - Chain Support (RH)	1
	00-183934-00003	Tube - Plastic Shrinkable 3/32 x 4 ft. (Cut to Length)	1
	00-183934-00006	Tube - Plastic Shrinkable 1/4 x 4 Ft. (Cut to Length)	1

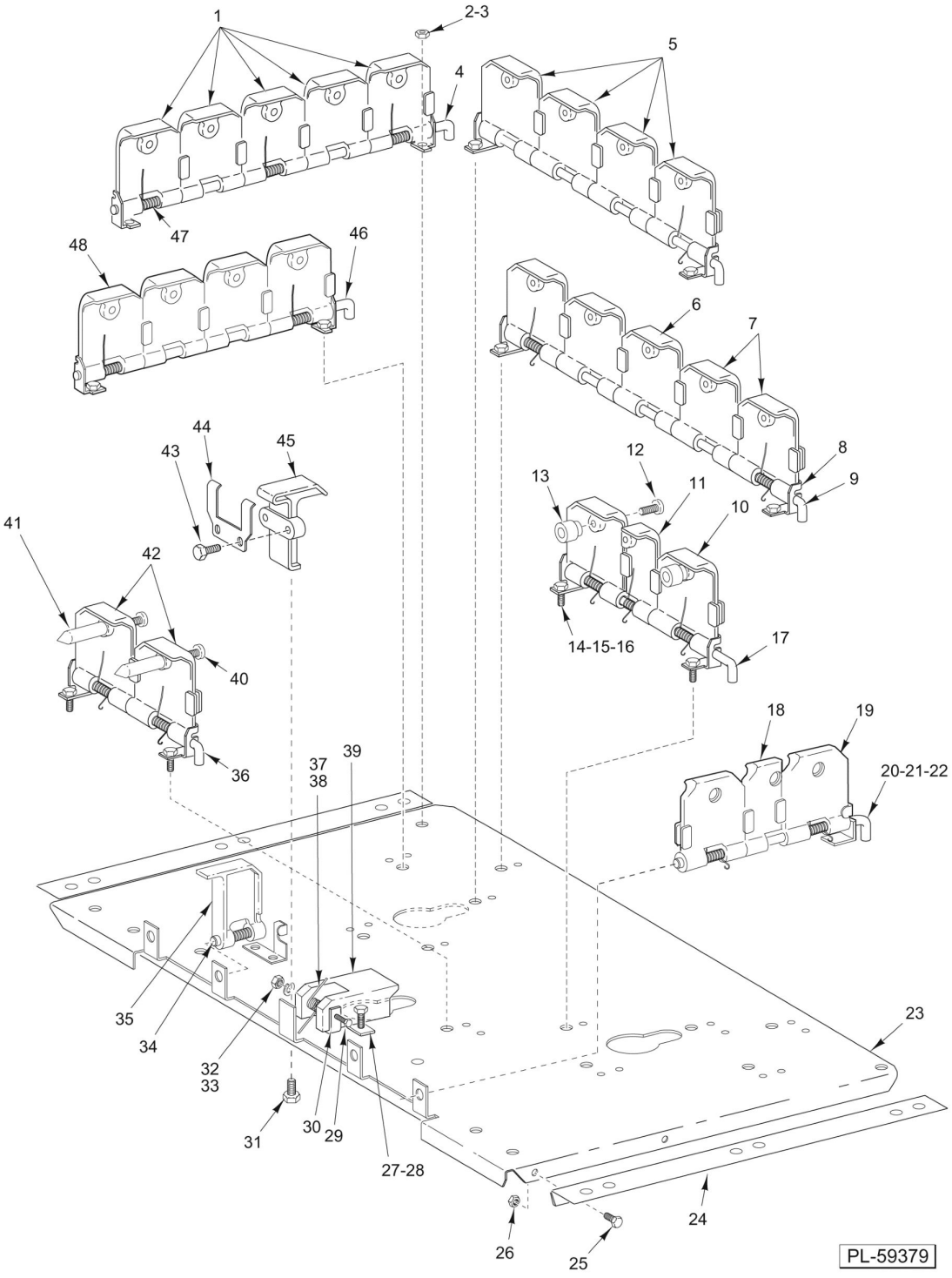

ELEVATOR PLATFORM

ELEVATOR PLATFORM

ILLUS. PL-59379	PART NO.	NAME OF PART	AMT.
1	00-334067	Slat - Smooth	10
2	SC-116-32	Cap Screw 10-32 x 3/8 Hex Hd. (SST)	4
3	NS-031-49	Stop Nut 10-32 Hex	4
4	00-332216	Rod - Elevator (#1 Front)	2
5	00-334066	Slat - Textured	4
6	00-334067	Slat - Smooth	1
7	00-334066	Slat - Textured	4
8	00-332212	Bracket - LH Stop	10
9	00-332216	Rod - Elevator (#1 Front)	3
10	00-334066	Slat - Textured	2
11	00-042651	Slat - Elevator (Half)	1
12	SC-093-21	Mach. Screw 10-32 x 3/8 Pan Hd. (SST)	2
13	00-440134	Spacer - Elevator	2
14	00-332213	Bracket - RH Stop	10
15	SC-116-32	Cap Screw 10-32 x 3/8 Hex Hd. (SST)	22
16	NS-048-19	Nut Assy. 10-32 KEPS	22
17	00-333328	Rod - Elevator (#3 Front)	1
18	00-334940	Slat - Elevator (Half)	2
19	00-334066	Slat - Textured	4
20	00-041512	Shaft - Slat	2
21	00-333147	Spring - Slat (Torsion)	4
22	NS-031-49	Stop Nut 10-32 Hex	4
23	00-049334	Platform - Elevator	1
24	00-441117	Bracket - Slat Extention	2
25	SC-116-32	Cap Screw 10-32 x 3/8 Hex Hd. (SST)	4
26	NS-048-19	Nut Assy. 10-32 KEPS	4
27	SC-116-32	Cap Screw 10-32 x 3/8 Hex Hd. (SST)	2
28	NS-048-19	Nut Assy. 10-32 KEPS	2
29	SC-116-30	Mach. Screw 6-32 x 11/4 Hex Hd. (SST)	1
30	00-331291	Bracket - Elevator Latch	1
31	SD-034-21	Self-Tapping Screw 10-16 x 1/2 Hex Washer Hd., Type AB	1
32	WL-006-42	Lockwasher #6 Medium	1
33	NS-011-07	Nut 6-32 Hex	1
34	00-332215	Rod - Elevator (Side)	2
35	00-048198	Slat - Elevator	2
36	00-332214	Rod - Elevator (#4 Front)	1
37	00-331288	Spring - Latch Torsion	1
38	00-331285	Sleeve - Elevator Latch	1
39	00-331284	Latch - Elevator Platform	1
40	SC-093-21	Mach. Screw 10-32 x 3/8 Pan Hd. (SST)	2
41	00-048199	Stud - Slat	2
42	00-334066	Slat - Textured	2
43	SD-034-21	Self-Tapping Screw 10-16 x 1/2 Hex Washer Hd., Type AB	2
44	00-049874	Bracket - Elevator Stop	1
45	00-049934	Post - Elevator	1
46	00-332219	Rod - Elevator (#2 Front)	2
47	00-333147	Spring - Slat (Torsion)	19
48	00-334067	Slat - Smooth	8
	00-048260	Elevator (Complete)	1

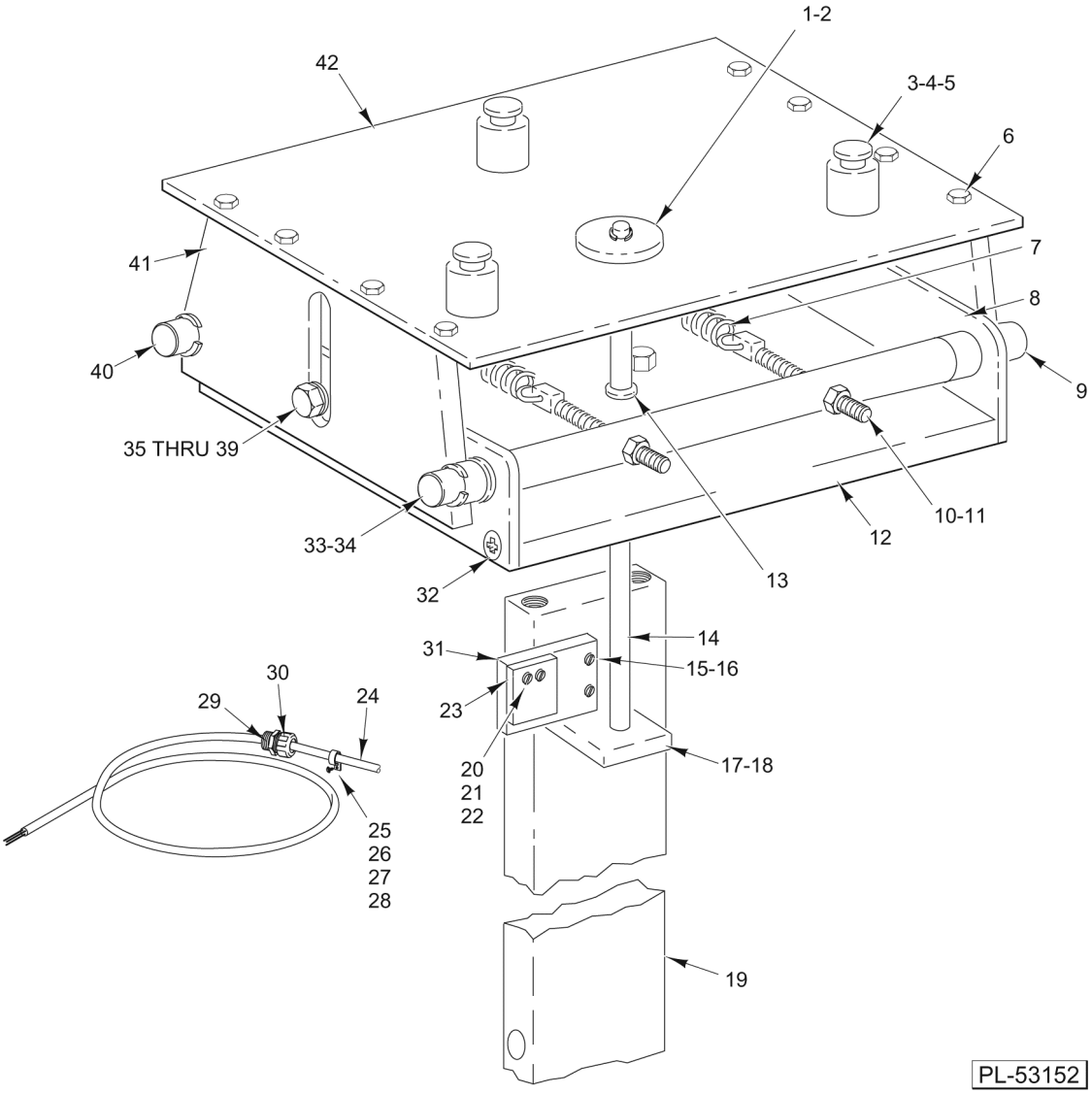

ELEVATOR SUPPORT

ELEVATOR SUPPORT

ILLUS. PL-53152	PART NO.	NAME OF PART	AMT.
1	WS-022-33	Washer	2
2	RR-010-06	Retaining Ring	2
3	00-330310	Stud - Elevator	3
4	SC-118-20	Cap Screw 1/4 -20 x 1/2 Hex Hd	3
5	WL-006-17	Lockwasher 1/4 Helical (SST)	3
6	SD-024-18	Self-Tapping Screw 10-24 x 1/2 Hex Hd., Type TT	8
7	00-044622	Spring	2
8	00-334157	Plate - Retaining	2
9	00-334049	Shaft - Locating	1
10	00-334201	Nut - Adjusting	2
11	00-334202	Hook - Spring	2
12	00-183746	Plate - Lower	1
13	00-334046	Bushing	1
14	00-334048	Plunger	1
15	SC-009-64	Mach. Screw 6-32 x 1 Slotted Rd. Hd	1
16	WL-006-42	Lockwasher #6 Medium	1
17	00-183738	Plate - Switch Actuator	1
18	SC-088-70	Set Screw 10-24 x 1/4 Hex Hdls., Cup Pt	1
19	00-175586	Support - Elevator	1
20	SC-009-85	Mach. Screw 6-32 x 11/4 Rd. Hd	3
21	WL-006-42	Lockwasher #6 Medium	4
22	WS-023-01	Washer (SST)	3
23	00-334728	Switch Assy	1
24	00-046979	Cable - Elevator Switch	1
25	00-086967	Clamp	1
26	SC-009-85	Mach. Screw 6-32 x 11/4 Rd. Hd	1
27	WS-023-01	Washer (SST)	1
28	WL-006-42	Lockwasher #6 Medium	1
29	FE-006-07	Lock Nut 1/2 (Use With Cable Assy.)	1
30	FE-022-84	Relief - Strain (Use With Cable Assy.)	1
31	00-334729	Plate - Switch	1
32	SD-024-16	Self-Tapping Screw 10-24 x 1/2 Phil. Flat Hd., Type TT	8
33	00-334050	Bushing - Slide	4
34	RR-004-03	Retaining Ring	4
35	SC-117-91	Cap Screw 1/4 -20 x 1 Hex Hd	4
36	NS-015-01	Nut 1/4 -20 Hex (SST)	2
37	WL-006-17	Lockwasher 1/4 Helical (SST)	4
38	00-334060	Spacer	2
39	WS-022-10	Washer	2
40	00-334110	Shaft - Adjusting	1
41	00-334286	Support	2
42	00-334160	Plate - Top Support	1
	00-183747	Plate & Bushing (Incls. Items 12 & 13)	1

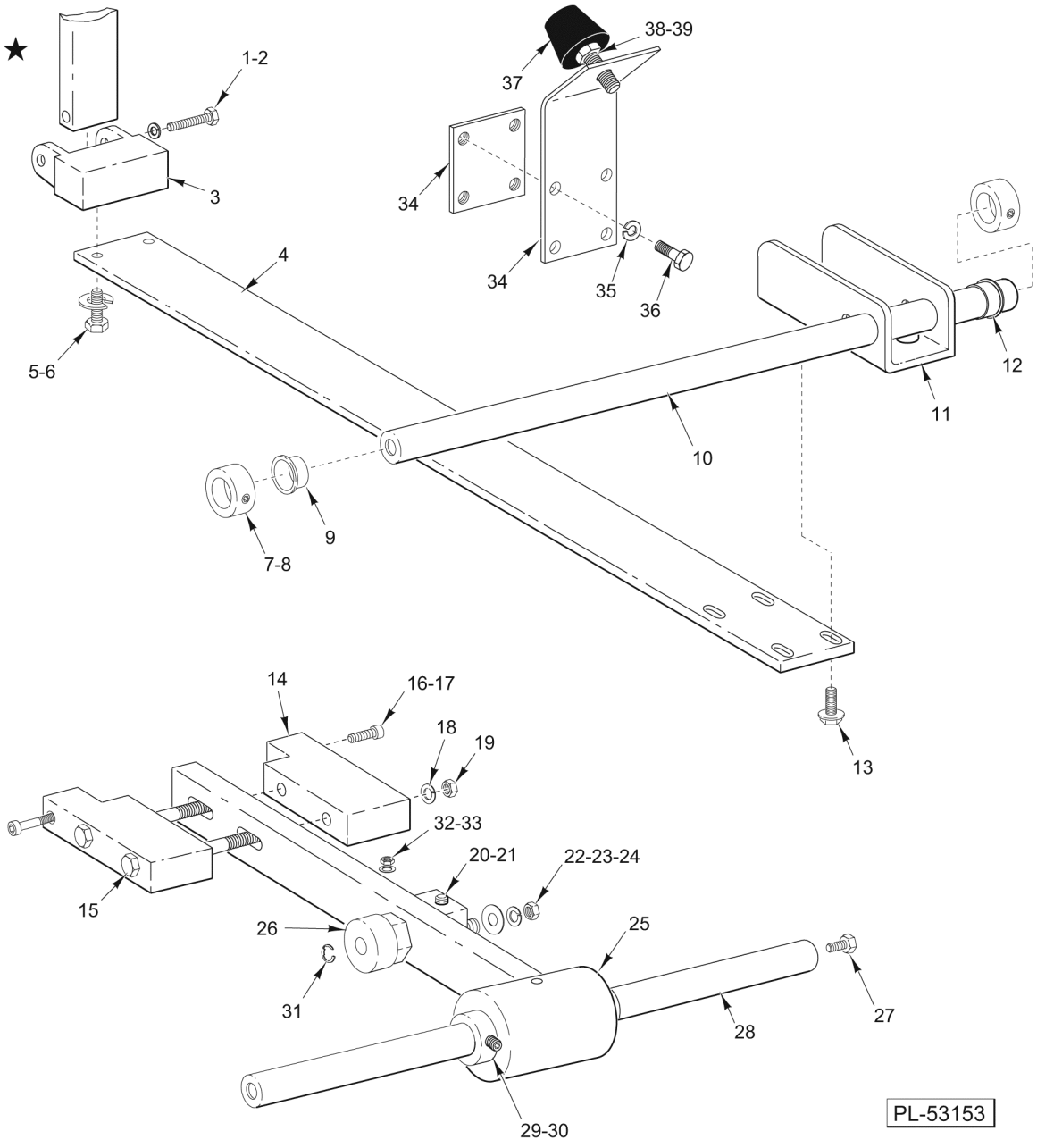

ELEVATOR LEVER

ELEVATOR LEVER

ILLUS. PL-53153	PART NO.	NAME OF PART	AMT.
1	SC-104-08	Shoulder Screw 5/16-18 x 3/4 Hex Socket Hd	2
2	WS-018-24	Washer	2
3	00-330820	Elevator Clevis Assy	1
4	00-334918	Lever - Elevator Upper	1
5	SC-118-11	Cap Screw 3/8-16 x 7/8 Hex Hd	2
6	WL-004-06	Lockwasher 3/8 Helical	2
7	00-131841	Collar 15/8 Dia	2
8	SC-075-15	Set Screw 5/16-18 x 3/8 Hex Hdls., Cup Pt	2
9	00-334921	Bearing - Nyliner	1
10	00-175972	Shaft - Underfolder Drive	1
11	00-047842	Bracket - Bearing	1
12	00-334921	Bearing - Nyliner	1
13	SC-123-94	Cap Screw 3/8-16 x 3/4 Hex Washer Hd	4
14	00-175871	Lower Elevator Clevis Assy	2
15	SC-097-11	Cap Screw 5/16-18 x 4 Hex Hd	2
16	SC-104-08	Shoulder Screw 5/16-18 x 3/4 Hex Socket Hd	2
17	WS-018-24	Washer	2
18	WL-003-47	Lockwasher 5/16 Helical	2
19	NS-013-14	Nut 5/16-18 Hex	2
20	00-125665	Bolt - 1/4 -28 UNF-2A x 21/4 Hex Hd	1
21	00-330340	Cam - Roller Stud	1
22	NS-013-36	Nut 1/2-20 Hex	1
23	WL-004-11	Lockwasher 1/2 Helical	1
24	WS-020-06	Washer	1
25	00-175866	Elevator Lever Assy	1
26	00-086782	Bearing - Ball	1
27	SC-123-94	Cap Screw 3/8-16 x 3/4 Hex Washer Hd	2
28	00-175865	Shaft - Elevator	2
29	00-131841	Collar 15/8 Dia	2
30	SC-075-15	Set Screw 5/16 -18 x 3/8 Hex Hdls., Cup Pt	2
31	RR-010-17	Retaining Ring	1
32	NS-048-25	Stop Nut 1/4 -28 Hex	1
33	WL-003-38	Lockwasher 1/4 Helical	1
34	00-049457	Bracket - Elevator Bumper (Bolt-on Only)	1
35	WL-003-47	Lockwasher 5/16 Helical	4
36	SC-120-38	Cap Screw 5/16 -18 x 1 Hex Hd	4
37	00-049458	Bumper - Elevator	1
38	NS-038-11	Stop Nut 5/16 -18 Hex	1
39	WL-003-47	Lockwasher 5/16 Helical	1
40	00-049465	Plate - Clamp	1
	00-049466	Kit - Elevator Bumper (Incls. Items 34, 35, 36, 37, 38, 39 & 40)	1

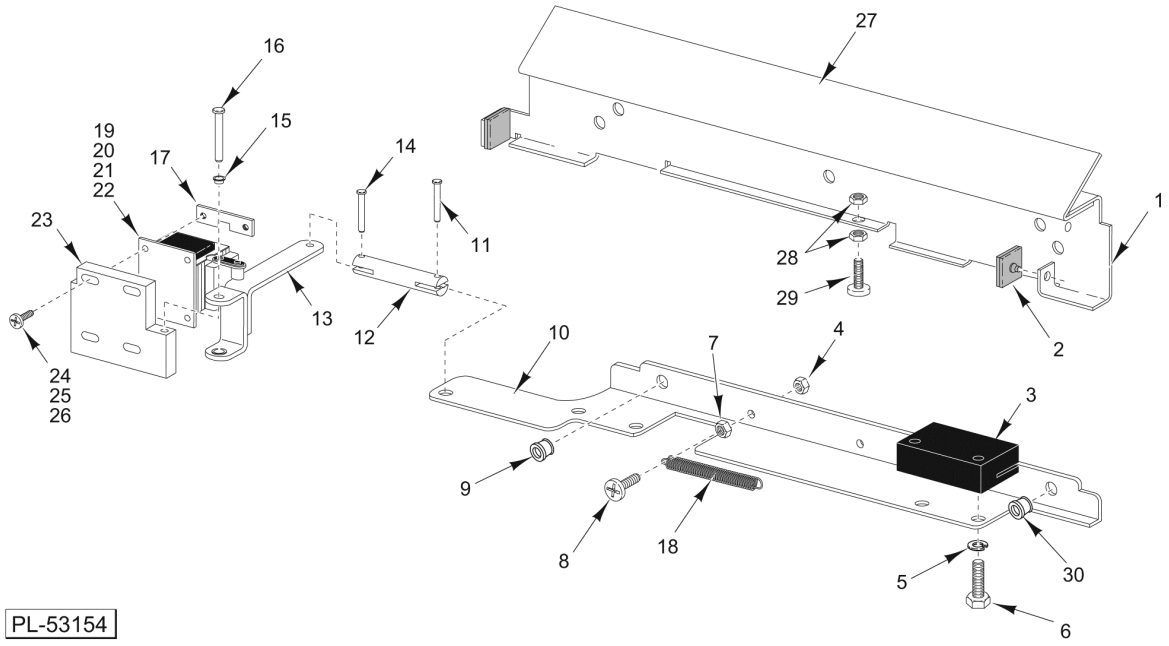

GRIPPER UNLOADER SLIDE UNIT
(WITH SOLENOID & LEVER ASSEMBLY)

GRIPPER UNLOADER SLIDE UNIT (WITH SOLENOID & LEVER ASSEMBLY)

ILLUS. PL-53154	PART NO.	NAME OF PART	AMT.
1	00-049128	Stop - Unloader	1
2	00-043451	Pad - Gripper (Gray) (Set of 13 Pads)	1
3	00-049127	Block - Unloader	2
4	NS-011-12	Stop Nut 8-32 (SST)	1
5	WL-006-07	Lockwasher #10 Helical (SST)	4
6	SC-067-07	Mach. Screw 10-24 x 1/2 Hex Hd. (SST)	4
7	NS-011-12	Nut 8-32 Hex	1
8	SC-093-04	Mach. Screw 8-32 x 1/2 Phil. Pan Hd. (SST)	1
9	00-175560	Bushing - Nyliner	1
10	00-049126	Bracket - Unloader	1
11	00-049124	Pin - Clevis (1 Lg.)	2
12	00-049125	Link - Unloader	1
13	00-049121	Lever Assy	1
14	00-049124	Pin - Clevis (1 Lg.)	1
15	00-175560	Bushing - Nyliner	2
16	00-049123	Pin - Clevis (2 Lg.)	1
17	00-049144	Plate - Nut	2
18	00-049864	Spring - Intake Gripper	2
19	00-049148	Solenoid (220-230 VAC/50-60 Hz.)	1
20	FE-006-07	Fitting	1
21	FE-022-84	Strain Relief	1
22	00-065890-00138	Terminal	1
23	00-049122	Block - Solenoid Mounting	1
24	SC-110-39	Mach. Screw 10-24 x 7/8 Hex Hd	4
25	WL-004-40	Lockwasher 10 Helical	4
26	WS-019-06	Washer	4
27	00-049385	Shield - Film Unloader Bracket	1
28	NS-011-12	Nut 8-32 Hex	2
29	SC-093-04	Mach. Screw 8-32 x 1/2 Phil. Pan Hd. (SST)	1
30	00-175560	Bushing - Nyliner	1

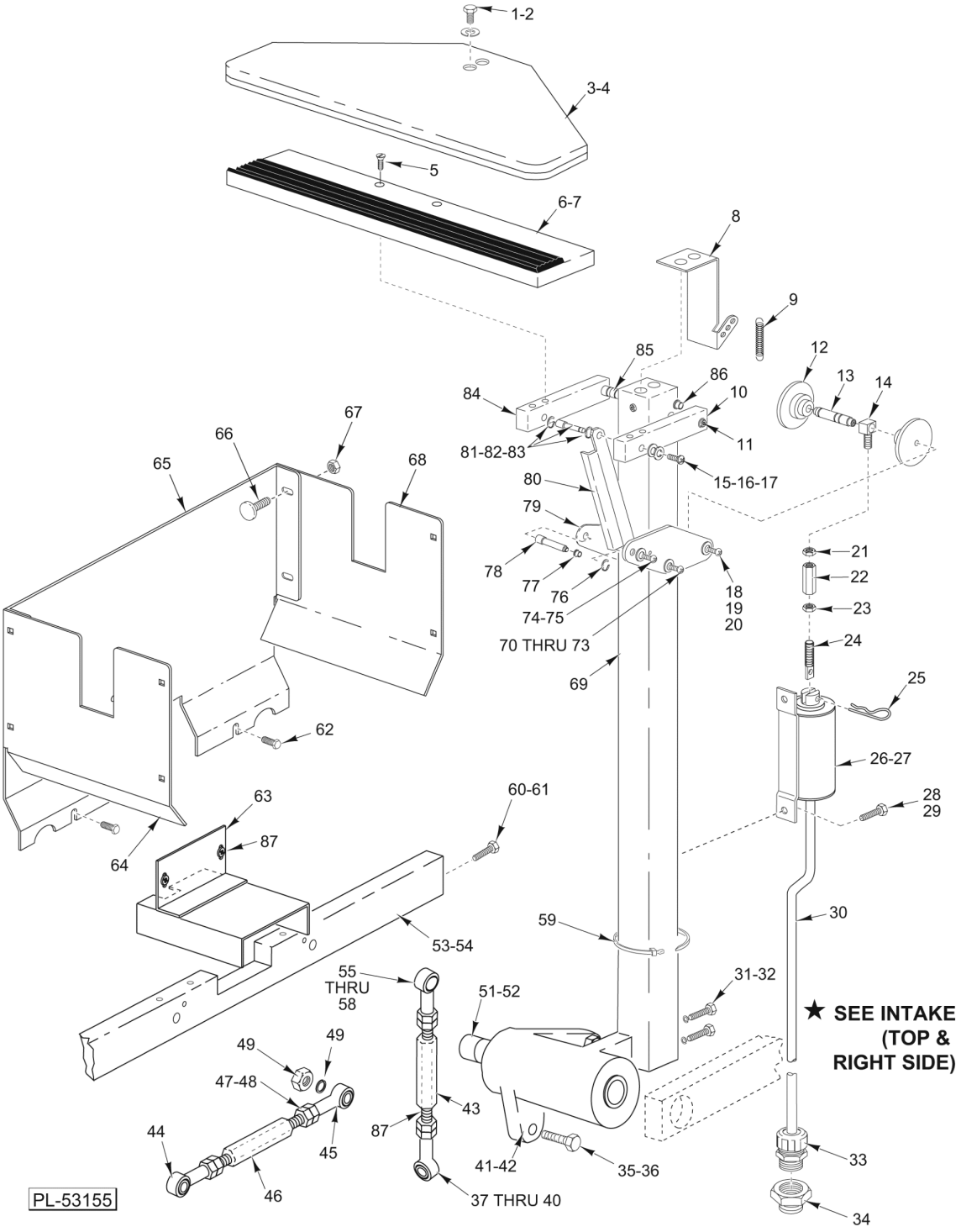
1-2
3-4
5
6-7
8
9
85
86
10
11
12
13
14
84
81-82-83
15-16-17
80
79
78
77
76
74-75
70 THRU 73
69
18
19
20
21
22
23
24
25
26-27
28
29
67
66
65
68
62
63
64
87
60-61
53-54
59
30
31-32
55
THRU
58
51-52
49
49
47-48
44
45
46
43
87
41-42
35-36
37 THRU 40
33
34
★ SEE INTAKE (TOP & RIGHT SIDE)
PL-53155

SIDE CLAMP

SIDE CLAMP

ILLUS. PL-53155	PART NO.	NAME OF PART	AMT.
1	SC-118-19	Cap Screw 1/4 -20 x 3/4 Hex Hd	2
2	WL-003-38	Lockwasher 1/4 Helical	2
3	00-043445	Clamp - Upper (Incls. Item 4)	1
4	00-043440	Pad - Upper Clamp	1
5	SC-014-92	Mach. Screw 10-32 x 1/2 Flat Hd	2
6	00-043446	Plate - Lower Assy. (Incls. Item 7)	1
7	00-043441	Pad - Lower	1
8	00-441582	Bracket - Spring Mounting	1
9	00-175798	Spring - Package Width	1
10	00-175940	Plate - Clamp Pivot (RH)	1
11	SC-047-72	Set Screw 1/4 -20 x 3/8 Hex Hdls., Cup Pt	1
12	00-441581	Stop - Linkage	2
13	00-175945	Shaft - Pivot Tenon	1
14	00-183429	Block (LH)	1
15	SC-113-37	Mach. Screw 6-32 x 5/8 Phil. Pan Hd	2
16	WS-023-15	Washer	2
17	WL-003-09	Lockwasher #6 Helical	2
18	SC-120-37	Mach. Screw 6-32 x 3/8 Hex Socket Hd	2
19	WL-003-09	Lockwasher #6 Helical	2
20	WS-023-15	Washer	2
21	NS-013-08	Nut 1/4 -28 (LH Thread)	1
22	00-330070	Block - Take Up	1
23	NS-013-07	Nut 1/4-28 Hex (RH Thread)	1
24	00-175944	Pin - Threaded Solenoid	1
25	00-443632	Pin - Cotter	1
26	00-048291	Solenoid Assy. (Side Clamp) (Incls. Items 27, 30, 33, & 34)	1
27	00-047339	Solenoid - Side Clamp (22 V.)	1
28	SC-118-20	Cap Screw 1/4-20 x 1/2 Hex Hd	2
29	WL-003-38	Lockwasher 1/4 Helical	2
30	00-334724	Tubing Vinyl Extruded	1
31	SC-118-07	Cap Screw 3/8-16 x 2 Hex Hd	2
32	WL-004-06	Lockwasher 3/8 Helical	2
33	FE-026-36	Strain Relief - Electrical	1
34	FE-006-07	Lock Nut 1/2 (Electrical)	1
35	SC-116-83	Cap Screw 3/8-16 x 1 1/2 Hex Hd	2
36	WL-004-06	Lockwasher 3/8 Helical	2
37	00-130312	Spacer	2
38	SC-118-08	Cap Screw 3/8-16 x 13/4 Hex Hd	1
39	WS-018-22	Washer	1
40	WL-004-06	Lockwasher 3/8 Helical	1
41	00-333277	Base Clamp Assy (RH)	1
42	00-183833	Base Clamp Assy (LH)	1
43	00-333427	Side Clamp Link Assy. (Incls. Items 44, 45, 47, 48, & 67) (Vertical)	1
44	00-334056	Rod - Female End LH Thread (With Grease Fitting)	1
45	00-334055	Rod - Female End RH Thread (With Grease Fitting)	1
46	00-175947	Link - Cross (Horizontal) (Incls. Items 44, 45, 47, & 48)	1
47	NS-013-27	Nut 3/8 -24 Hex (RH Thread)	1
48	NS-013-28	Nut 3/8 -24 Hex (LH Thread)	1
49	NS-013-25	Nut 3/8 -16 Hex	2
50	WS-018-22	Washer	2
51	00-175677	Shaft - Film Clamps	2
52	00-175678	Spacer - Pivot Side Clamp	4
53	00-175701	Bar - Pivot Side Clamp	1
54	SC-047-72	Set Screw 1/4 -20 x 3/8 Hex Hdls., Cup Pt	4
55	SC-116-83	Cap Screw 3/8 -16 x 11/2 Hex Hd	3

SIDE CLAMP

ILLUS. PL-53155	PART NO.	NAME OF PART	AMT.
56	WS-018-22	Washer	3
57	NS-013-25	Nut 3/8-16 Hex	3
58	WL-004-06	Lockwasher 3/8 Helical	3
59	00-255502	Tie - Cable Locking	1
60	SC-118-10	Cap Screw 3/8-16 x 1 Hex Hd	4
61	WL-004-06	Lockwasher 3/8 Helical	4
62	SC-118-20	Cap Screw 1/4-20 x 1/2 Hex Hd	2
63	00-042763	Shield & Bracket Assy	1
64	00-049682	Panel (LH)	1
65	00-049683	Stop - Package	1
66	NS-038-08	Lock Nut 1/4 -20 x 1 Hex	8
67	SC-124-34	Bolt 1/4-20 x 1/2 Sq. Neck, Rd. Hd	8
68	00-049681	Panel (RH)	1
69	00-044779	Arm - Side Clamp	1
70	SC-120-37	Mach. Screw 6-32 x 3/8 Hex Socket Hd	2
71	WL-003-09	Lockwasher #6 Helical	2
72	00-183399	Bushing - Nyliner	2
73	00-175945	Shaft - Pivot Tenon	1
74	SC-120-37	Mach. Screw 6-32 x 3/8 Hex Socket Hd	2
75	WL-003-09	Lockwasher #6 Helical	2
76	RR-010-06	Retaining Ring	2
77	00-175560	Bushing - Nyliner	2
78	00-175945	Shaft - Pivot Tenon	1
79	00-044665	Plate - Side Clamp Pivot	2
80	00-175939	Link - Scissors	1
81	RR-010-06	Retaining Ring	2
82	00-175945	Shaft - Pivot Tenon	1
83	00-175560	Bushing - Nyliner	2
84	00-175941	Plate - Clamp Pivot (LH)	1
85	00-175942	Shaft - Pivot Clamp	1
86	00-183399	Bushing - Nyliner	2
87	00-333428	Link - Lever Clamp	1

NOTES

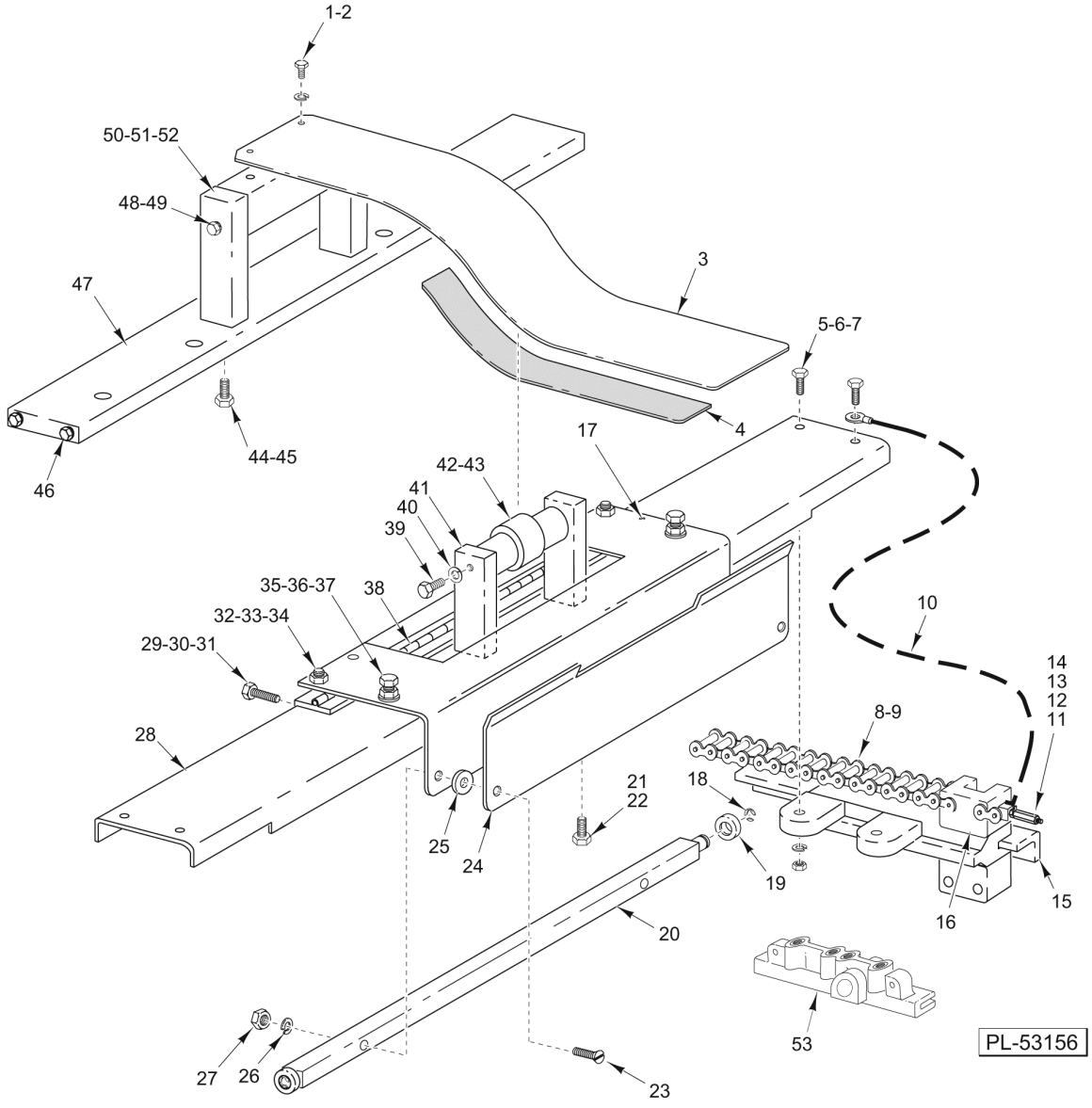

UPPER PUSHER

UPPER PUSHER

ILLUS. PL-53156	PART NO.	NAME OF PART	AMT.
1	SC-118-20	Cap Screw 1/4 -20 x 1/2 Hex Hd	2
2	WL-003-38	Lockwasher 1/4 Helical	2
3	00-043871	Package Holddown	1
4	00-043455	Pad - Holddown	2
5	SC-118-17	Cap Screw 1/4 -20 x 11/4 Hex Hd	2
6	WL-003-38	Lockwasher 1/4 Helical	2
7	NS-013-02	Nut 1/4 -20 Hex	2
8	00-046696	Chain - Gripper (30" Section) (Incls. Item 9)	1
9	00-044784	Link - Connecting #40	5
10	00-183458	Ground Wire Assy	1
11	00-330069	Chain Take-Up Assy	1
12	WL-013-14	Lockwasher 1/4 Internal Shakeproof	1
13	00-044785	Link - Offset #40	1
14	00-046698	Chain - Gripper (Incls. Item 9)	1
15	00-175683	Rail - Film Support	1
16	00-175899	Slide - Pusher	2
17	00-032973	Plate - Pusher	1
18	RR-004-03	Retaining Ring	2
19	00-333376	Roller - Deflector	2
20	00-175903	Bar - Pusher Lift	1
21	SC-118-20	Cap Screw 1/4-20 x 1/2 Hex Hd	2
22	WL-003-38	Lockwasher 1/4 Helical	2
23	SC-022-80	Mach. Screw 10-24 x 1 1/4 Slotted Flat Hd. (SST)	2
24	00-441733	Bracket - Pusher	1
25	00-441681	Spacer - Pusher	2
26	WL-006-07	Lockwasher 10 Medium	2
27	NS-011-18	Nut 10-24 Hex (SST)	2
28	00-047420	Channel - Pusher	1
29	SC-116-32	Cap Screw 10-32 x 3/8 Hex Hd. (SST)	5
30	WL-006-07	Lockwasher #10 Helical (SST)	5
31	NS-011-23	Nut 10-32 Hex (SST)	5
32	NS-011-23	Nut 10-32 Hex (SST)	4
33	SC-116-32	Cap Screw 10-32 x 3/8 Hex Hd. (SST)	4
34	WL-006-07	Lockwasher #10 Helical (SST)	4
35	SC-041-01	Cap Screw 1/4-20 x 3/4 Hex Hd	2
36	WL-006-17	Lockwasher 1/4 Helical (SST)	2
37	NS-015-01	Nut 1/4 -20 Hex (SST)	4
38	00-175901	Hinge - Pusher	1
39	SC-118-15	Cap Screw 1/4-20 x 13/4 Hex Hd	2
40	WL-003-38	Lockwasher 1/4 Helical	2
41	00-175905	Block - Roller Mounting	2
42	00-442039	Roller - Holddown	1
43	00-442040	Spacer - Roller	1
44	SC-062-21	Cap Screw 5/16-18 x 1 1/4 Hex Hd	2
45	WL-003-47	Lockwasher 5/16 Helical	2
46	SC-123-94	Cap Screw 3/8-16 x 3/4 Hex Washer Hd	4
47	00-032931	Bar - Underfolder	1
48	SC-117-91	Cap Screw 1/4-20 x 1 Hex Hd	2
49	WL-003-38	Lockwasher 1/4 Helical	2
50	00-175910	Support - Holddown Pivot	2
51	00-175909	Pivot - Holddown	1
52	00-175911	Block - Holddown Pivot	1
53	00-440591	Block - Gripper Slide	2
	00-046690	Gripper - Chain Assy. (RH) (Incls. Items 8, 9, 10, 11, 12, 14, 16, & 53)	1
	00-046689	Gripper - Chain Assy. (LH) (Incls. Items 8, 9, 11, 14, 16, & 53)	1

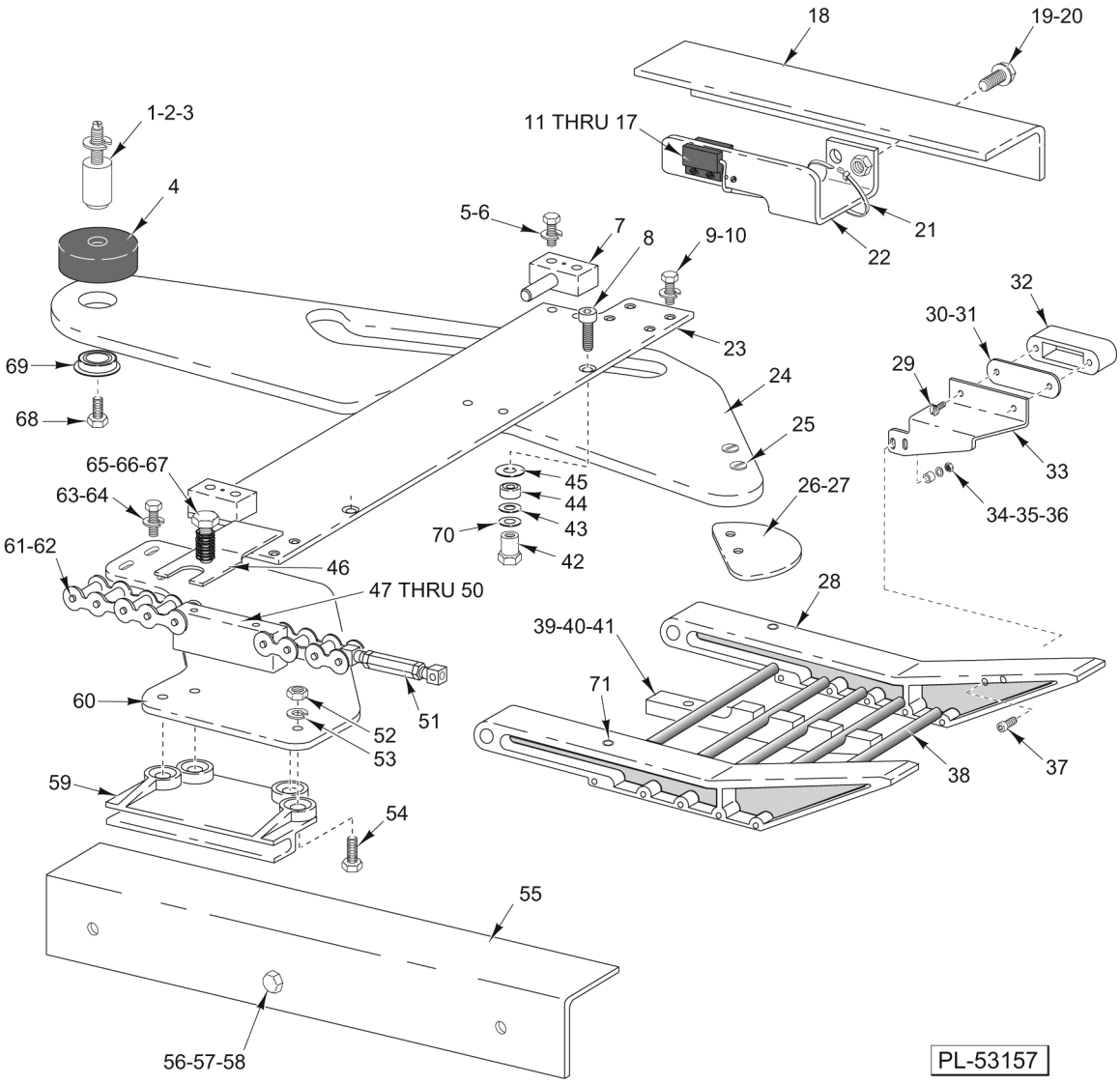

UNDERFOLDER

UNDERFOLDER

ILLUS. PL-53157	PART NO.	NAME OF PART	AMT.
1	00-044879	Stud - Underfolder Side	2
2	WL-006-28	Lockwasher 3/8 Helical	2
3	NS-015-14	Nut 3/8 -24 Hex	2
4	00-184560	Bearing	2
5	SC-110-31	Mach. Screw 10-24 x 3/4 Hex Hd	4
6	WL-006-07	Lockwasher #10 Helical (SST)	4
7	00-175960	Underfolder Pivot Block Assy	2
8	SC-118-13	Cap Screw 1/4-28 x 3/4 Flat Hd	2
9	SC-110-12	Cap Screw 1/4-20 x 5/8 Hex Hd	6
10	WL-003-38	Lockwasher 1/4 Helical	6
11	00-183396	Plate - Screw Switch	1
12	SC-018-51	Mach. Screw 4-40 x 5/8 Slotted Pan Hd	3
13	WL-008-45	Lockwasher #4 Internal Shakeproof	3
14	NS-009-45	Nut 4-40 Hex	4
15	WS-029-24	Washer	6
16	00-175998	Sensor	2
17	00-046954	Cable Assy. - Output Switch (Incls. Item 16)	1
18	00-175683	Rail - Film Support	1
19	SC-123-92	Mach. Screw 1/4-20 x 5/8 Hex Washer Hd	2
20	NS-038-04	Lock Nut 1/4 -20 Hex	2
21	00-255502	Tie - Cable Locking	1
22	00-048072	Bracket - Switch	1
23	00-175964	Bar - Underfolder	1
24	00-047479	Underfold - Side	2
25	SC-129-16	Mach. Screw 10-24 x 5/16 Phil. Flat Hd. (SST)	4
26	00-043419	Extension - Underfolder Right	1
27	00-043418	Extension - Underfolder Left	1
28	00-442349	Ramp - Pusher (Ramps Must Be Installed In Pairs)	2
29	SD-029-03	Self-Tapping Screw 8-32 x 3/8 Phil. Pan Hd., Type F	2
30	00-119300	Gasket - Magnet Retainer	1
31	00-119057	Magnet	1
32	00-288454-00002	Retainer - Magnet	1
33	00-048073	Bracket - Magnet	1
34	NS-048-19	Nut Assy. 10-32 KEPS	2
35	WS-029-79	Washer	2
36	00-183548	Spacer - Solenoid Link	2
37	SC-059-17	Cap Screw 10-32 x 3/4 Hex Socket Hd	2
38	00-175966	Roller - Underfolder	5
39	00-441797	Block - Deflector	1
40	SC-059-28	Cap Screw 1/4 -20 x 3/8 Hex Socket Hd	2
41	WL-008-17	Lockwasher 1/4 Internal	2
42	00-043825	Stud - Underfolder	2
43	00-330154	Washer - Slide (0.062) (Bottom Side Underfolder)	2
44	00-127559	Bearing	2
45	00-043849	Washer - Slide (0.031) (Top Side Underfolder)	2
46	00-183831	Clip - Spring	2
47	00-175970	Block - Chain Underfolder	2
48	SC-118-19	Cap Screw 1/4-20 x 3/4 Hex Hd	2
49	WL-003-38	Lockwasher 1/4 Helical	2
50	WS-017-25	Washer	4
51	00-330069	Chain Take-Up Assy	2
52	NS-013-02	Nut 1/4 -20 Hex	2
53	WL-003-38	Lockwasher 1/4 Helical	2
54	SC-022-35	Mach. Screw 1/4-20 x 1 Slotted Flat Hd. (SST)	2
55	00-175683	Rail - Film Support	5

UNDERFOLDER

ILLUS. PL-53157	PART NO.	NAME OF PART	AMT.
56	NS-013-02	Nut 1/4 -20 Hex	6
57	WL-003-38	Lockwasher 1/4 Helical	6
58	SC-118-19	Cap Screw 1/4-20 x 3/4 Hex Hd	6
59	00-175962	Slide - Underfolder	2
60	00-175963	Plate - Underfolder	2
61	00-046692	Chain Assy. - Underfolder	2
62	00-044784	Link - Connecting (#40 W/WP Finish)	4
63	SC-110-12	Cap Screw 1/4-20 x 5/8 Hex Hd	2
64	WL-003-38	Lockwasher 1/4 Helical	2
65	00-183830	Stud - Spring Clip	2
66	00-333492	Spring - Belt Sealer	2
67	WL-003-38	Lockwasher 1/4 Helical	2
68	SC-110-12	Cap Screw 1/4-20 x 5/8 Hex Hd	2
69	00-086789	Bearing - Flanged	2
70	WS-018-34	Washer - Shim (0.010 Thk.)	AR
71	SC-122-80	Set Screw 1/4-20 x 1/2 Hex Hdls., Cup Pt	2
	00-183934-00003	Tube - Plastic Shrinkable 3/32 x 4 ft. (Cut to Length)	AR
	00-183934-00006	Tube - Plastic Shrinkable 1/4 x 4 Ft.(Cut to Length)	AR

NOTES

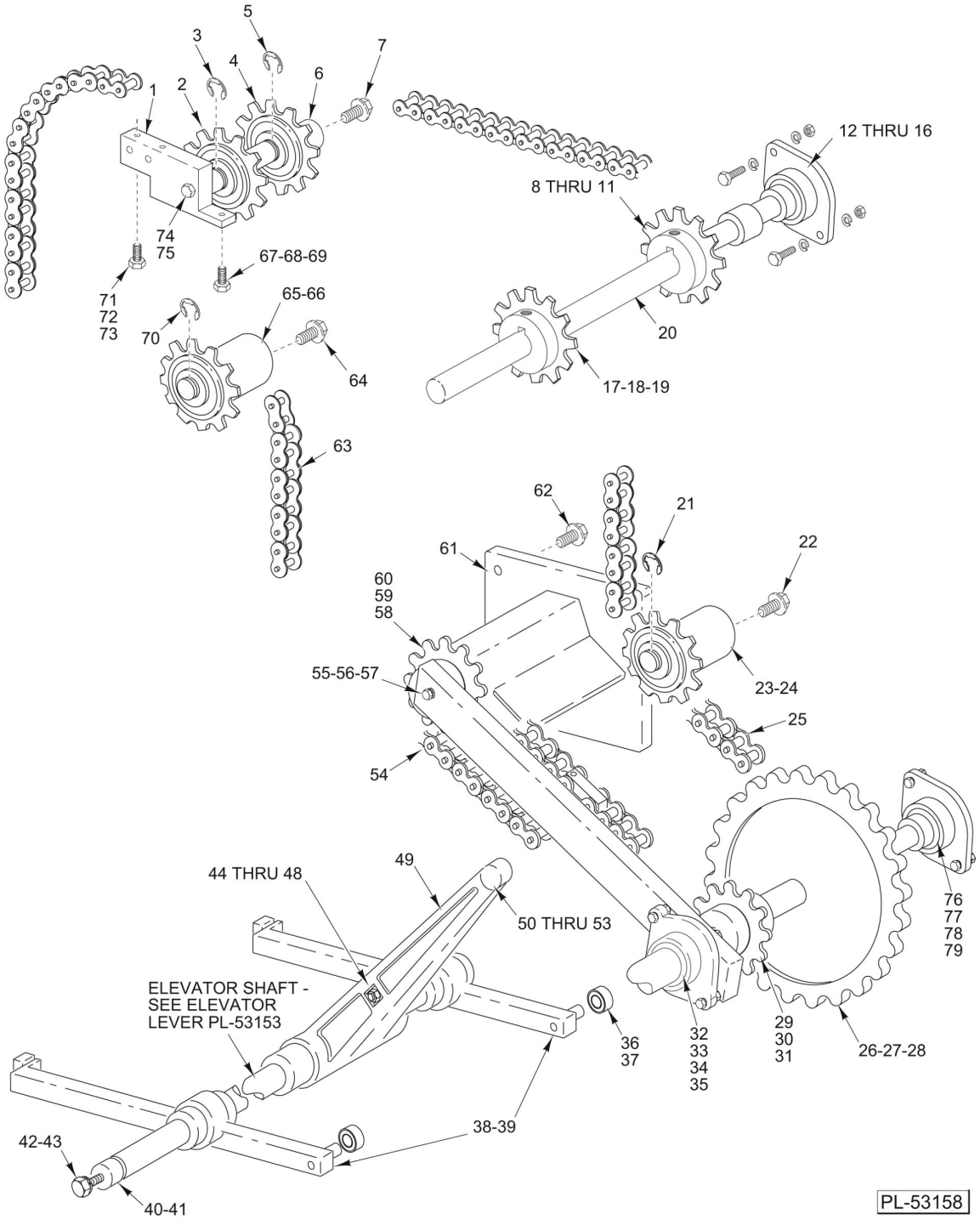

CHAIN AND SPROCKETS

CHAIN AND SPROCKETS

ILLUS. PL-53158	PART NO.	NAME OF PART	AMT.
1	00-044162	Block - Idler Support	2
2	00-047830	Sprocket - Idler (17T)	4
3	RR-008-13	Retaining Ring	3
4	00-047830	Sprocket - Idler (17T)	4
5	RR-008-13	Retaining Ring	3
6	00-047819	Stud - Idler (Film Retaining)	2
7	SC-123-94	Cap Screw 3/8-16 x 3/4 Hex Washer Hd	4
8	00-047823	Spacer - Sprocket	2
9	KW-003-10	Key - 606 Woodruff 3/16 x 3/4	2
10	SC-047-32	Set Screw 5/16-18 x 5/16 Hex Hdls., Cup Pt	2
11	00-175694	Sprocket #40 (17T)	2
12	00-086776	Flange - Stamping	4
13	00-175997	Bearing - Ball	2
14	SC-120-38	Cap Screw 5/16-18 x 1 Hex Hd	4
15	WL-003-47	Lockwasher 5/16 Helical	4
16	NS-013-14	Nut 5/16-18 Hex	4
17	00-047817	Idler - Sprocket Underfolder (17T)	2
18	SC-047-32	Set Screw 5/16-18 x 5/16 Hex Hdls., Cup Pt	2
19	00-131691	Collar	2
20	00-047827	Shaft - Gripper Drive	1
21	RR-008-13	Retaining Ring	1
22	SC-123-94	Cap Screw 3/8-16 x 3/4 Hex Washer Hd	6
23	00-047815	Stud - Chain Idler Mounting	4
24	00-047818	Sprocket - Idler (15T)	2
25	00-046692	Chain Assy. - Underfolder	2
26	00-175881	Sprocket - Underfolder	2
27	SC-075-15	Set Screw 5/16-18 x 3/8 Hex Hdls., Cup Pt	2
28	KW-003-17	Key - Woodruff 1/4 x 1 1/4	1
29	00-175955	Sprocket - Underfolder	1
30	KW-003-17	Key - Woodruff 1/4 x 1 1/4	3
31	SC-047-72	Set Screw 1/4 -20 x 3/8 Hex Hdls., Cup Pt	2
32	00-175994	Bearing - Ball	3
33	SC-117-92	Cap Screw 5/16 -18 x 3/4 Hex Hd	4
34	WL-003-47	Lockwasher 5/16 Helical	4
35	NS-013-14	Nut 5/16-18 Hex	4
36	00-086782	Bearing - Ball	2
37	RR-010-17	Retaining Ring	2
38	00-175820	Lever Assy	2
39	00-330139	Stud - Cam Bearing	2
40	SC-075-15	Set Screw 5/16-18 x 3/8 Hex Hdls., Cup Pt	2
41	00-131841	Collar 15/8 Dia	2
42	WL-004-06	Lockwasher 3/8 Helical	2
43	SC-118-11	Cap Screw 3/8-16 x 7/8 Hex Hd	2
44	00-175954	Stud - Bearing	1
45	00-086782	Bearing - Ball	1
46	WL-004-11	Lockwasher 1/2 Helical	1
47	NS-013-36	Nut 1/2-20 Hex	1
48	RR-010-17	Retaining Ring	2
49	00-175950	Underfolder Lever Assy. (Incls. Items 44 thru 48)	1
50	00-183703	Spacer - Underfolder Lever	1
51	SC-116-83	Cap Screw 3/8-16 x 1 1/2 Hex Hd	1
52	WL-004-06	Lockwasher 3/8 Helical	1
53	WS-018-24	Washer	1
54	00-046691	Underfolder Drive Chain Assy	1
55	00-175956	Support - Chain	1

CHAIN AND SPROCKETS

ILLUS. PL-53158	PART NO.	NAME OF PART	AMT.
56	SC-117-92	Cap Screw 5/16 -18 x 3/4 Hex Hd	1
57	WL-003-47	Lockwasher 5/16 Helical	1
58	00-334481	Sprocket (21T)	1
59	00-086780	Bearing - Ball (S5KDD) Fafnir	2
60	RR-008-14	Retaining Ring	2
61	00-175679	Plate & Stud Assy	1
62	SC-123-94	Cap Screw 3/8-16 x 3/4 Hex Washer Hd	4
63	00-046692	Chain Assy. - Underfolder	1
64	SC-123-94	Cap Screw 3/8-16 x 3/4 Hex Washer Hd	1
65	00-047818	Sprocket - Idler (15T)	2
66	00-047815	Stud - Chain Idler Mounting	2
67	WL-008-17	Lockwasher 1/4 Internal	2
68	SC-118-19	Cap Screw 1/4-20 x 3/4 Hex Hd	2
69	NS-017-03	Jam Nut 1/4-20 Hex	2
70	RR-008-13	Retaining Ring	2
71	WL-008-17	Lockwasher 1/4 Internal	2
72	SC-117-91	Cap Screw 1/4-20 x 1 Hex Hd	2
73	NS-017-03	Jam Nut 1/4-20 Hex	2
74	SC-120-38	Cap Screw 5/16-18 x 1 Hex Hd	2
75	WL-003-47	Lockwasher 5/16 Helical	2
76	00-175994	Bearing - Ball	3
77	SC-117-92	Cap Screw 5/16 -18 x 3/4 Hex Hd	4
78	WL-003-47	Lockwasher 5/16 Helical	4
79	NS-013-14	Nut 5/16-18 Hex	4

NOTES

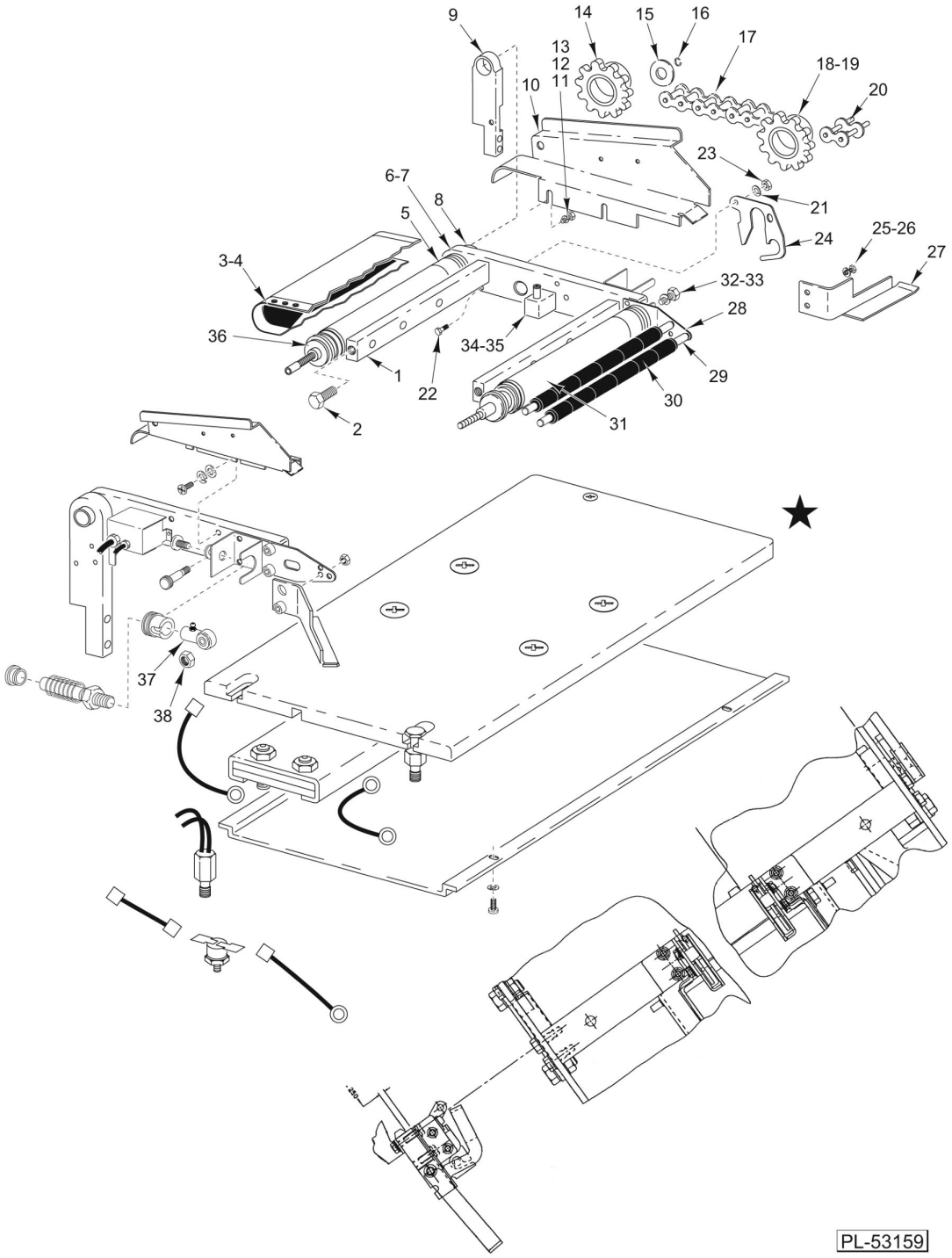

BELT SEALER UNIT

BELT SEALER UNIT

ILLUS. PL-53159	PART NO.	NAME OF PART	AMT.
1	00-048218	Spacer - Hotplate	2
2	SC-061-04	Cap Screw 5/16 -18 x 1 Socket Flat Hd	5
3	00-048234	Belt - Sealer	1
4	00-048674	Pin - Belt	1
5	00-048219	Roller & Shaft Assy	1
6	00-440179	Frame & Hub Assy. (LH)	1
7	00-048215	Bearing - Trust	1
8	00-184738	Bearing - Thrust	2
9	00-048698	Support Assy. - Sealer	1
10	00-440426	Cover - Hotplate (LH)	1
11	SC-018-22	Mach. Screw 10-24 x 1/2 Phil. Pan Hd	2
12	WL-006-07	Lockwasher #10 Helical (SST)	2
13	WS-023-20	Washer	2
14	00-175523	Clutch & Sprocket Assy	1
15	00-184738	Bearing - Thrust	2
16	RR-004-05	Retaining Ring	1
17	00-440477	Chain Assy. - Hotplate Drive (Incls. Item 20)	1
18	00-440476	Sprocket - #35 (18T)	1
19	KW-003-10	Key - 606 Woodruff 3/16 x 3/4	1
20	00-087165	Link - Chain Connector	1
21	00-048076	Bushing - Sealer Pivot	1
22	SC-110-39	Mach. Screw 10-24 x 7/8 Hex Hd	1
23	NS-047-70	Lock Nut 10-24 Hex	1
24	00-048070	Support - Sealer	1
25	SC-059-29	Cap Screw 1/4 -20 x 1/2 Hex Socket Hd	4
26	WL-006-17	Lockwasher 1/4 Helical (SST)	4
27	00-440500-00002	Brace - Sealer (LH)	1
28	00-440502	Bracket Assy. - Sealer (LH)	1
29	00-183674	Shaft - Discharge Roller	2
30	00-183675	Bearing - Nyliner	16
31	00-440314	Roller & Shaft Assy	1
32	SC-090-37	Cap Screw 3/8-24 x 1 Hex Hd	1
33	WL-004-06	Lockwasher 3/8 Helical	1
34	00-048217	Block - Hot Plate Mounting	1
35	00-048232	Spacer - Hotplate	1
36	00-048215	Bearing - Thrust	2
37	00-334055	Rod - Female End (With Grease Fitting)	2
38	NS-017-20	Jam Nut 3/8-24 Hex	2
	00-440199	Kit - Roller Assy. (Incls. Items 31, 32, 33, 37, & 38)	2

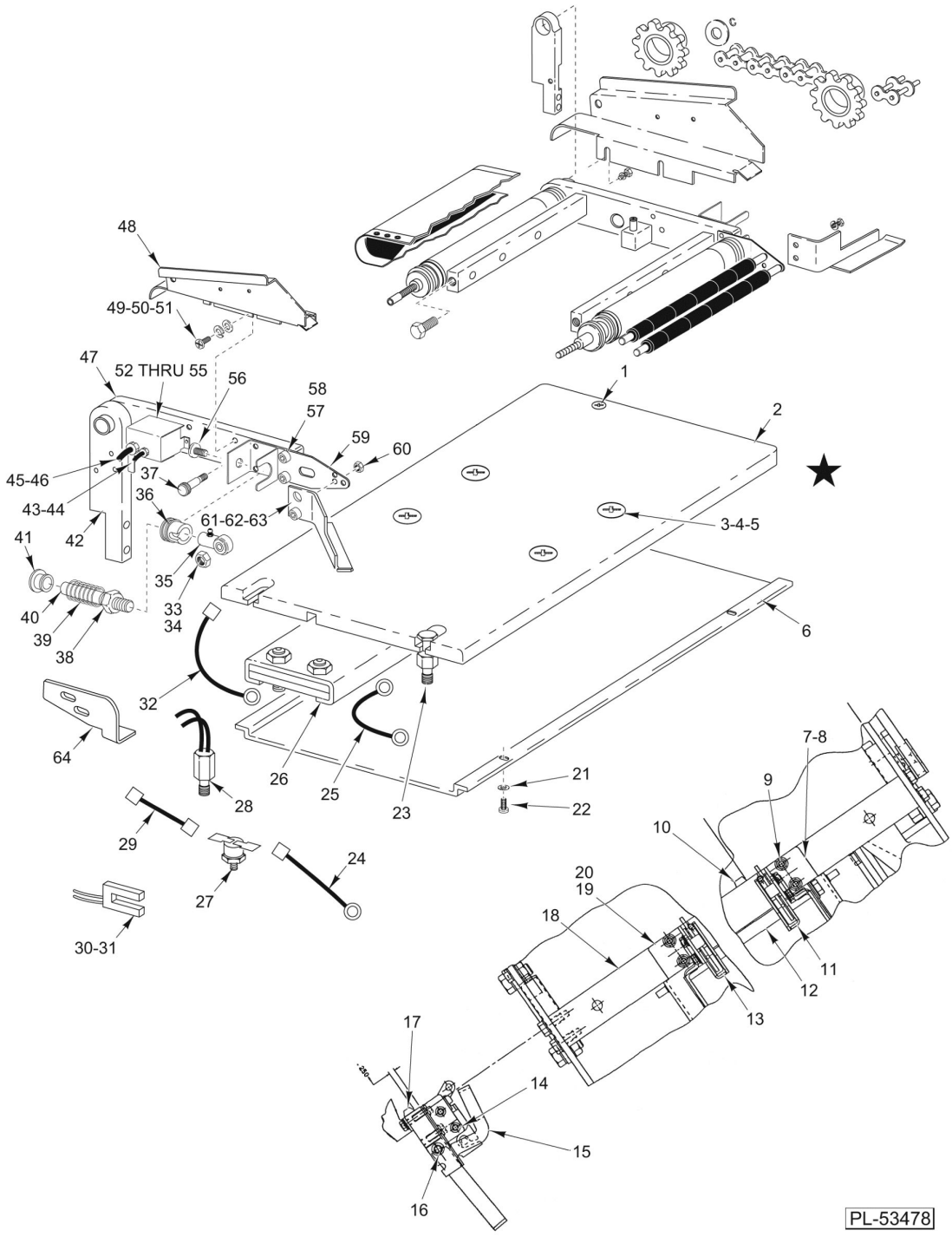
48
49-50-51
47
52 THRU 55
56
58
57
59
60
1
2
45-46
37
36
43-44
42
61-62-63
3-4-5
41
35
33
34
40
39
38
6
32
64
26
25
23
28
21
22
29
27
24
30-31
7-8
9
10
20
19
18
11
12
13
17
14
15
16
PL-53478

BELT SEALER

BELT SEALER

ILLUS. PL-53478	PART NO.	NAME OF PART	AMT.
1	SC-029-38	Mach. Screw 1/4-20 x 1 Flat Hd. (Brass)	1
2	00-048216	Hotplate	1
3	SC-029-47	Mach. Screw 5/16-18 x 1 Slotted Flat Hd. (Brass)	4
4	WL-003-47	Lockwasher 5/16 Helical	4
5	NS-014-11	Nut 5/16-18 Hex (Brass)	4
6	00-048222	Cover - Hotplate Bottom	1
7	00-048619	Shim - Latch	1
8	00-048052	Bracket - Latch Mounting (RH)	1
9	SC-123-92	Mach. Screw 1/4-20 x 5/8 Hex Washer Hd	8
10	00-334944	Bumper	1
11	00-048059	Latch - Sealer (RH)	1
12	00-048049	Lever Assy. - Sealer Latch	1
13	00-048060	Latch - Sealer (LH)	1
14	SC-123-92	Mach. Screw 1/4-20 x 5/8 Hex Washer Hd	1
15	00-048049	Lever Assy. - Sealer Latch	1
16	00-175560	Bushing - Nyliner	2
17	00-334944	Bumper	1
18	00-047900	Bar - Rear Support	1
19	00-048051	Bracket - Latch Mounting (LH)	1
20	00-048619	Shim - Latch	1
21	WL-006-07	Lockwasher #10 Helical (SST)	4
22	SC-113-08	Mach. Screw 10-32 x 1/2 Phil. Pan Hd	4
23	00-175522	Stud - Spacer	2
24	00-046991	Wire Assy. - Overload/Element	1
25	00-183764	Jumper Wire Assy	1
26	00-087017	Plate - Element	2
27	00-048514	Sensor - Thermal	1
28	00-046999	Harness - Thermistor	1
29	00-046990	Wire - Junction Box/Overload	1
30	00-046945	Switch - Vane	1
31	00-046953	Cable Assy. - Sealer Belt (Incls. Item 31)	1
32	00-046992	Wire Assy. - Element/Junction Box	1
33	WL-004-06	Lockwasher 3/8 Helical	1
34	NS-017-20	Jam Nut 3/8-24 Hex	2
35	00-334055	Rod - Female End (With Grease Fitting)	2
36	00-048045	Bushing - Bearing (Rod End)	2
37	00-048079	Striker - Latch	2
38	NS-017-20	Jam Nut 3/8-24 Hex	2
39	00-333492	Spring - Belt Sealer	2
40	00-048065	Stud - Sealer (Rod End)	2
41	00-041488	Bearing - Nyliner	2
42	00-048698	Support Assy. - Sealer	1
43	00-046998	Cable Assy. - Thermistor Sensor	1
44	FE-025-66	Strain Relief (Electrical)	1
45	00-046980	Cable Assy. - Heater Power Control	1
46	FE-017-41	Strain Relief (Electrical)	1
47	00-440178	Frame & Hub Assy. (RH)	1
48	00-440427	Cover - Hotplate (RH)	1
49	SC-018-22	Mach. Screw 10-24 x 1/2 Phil. Pan Hd	2
50	WL-006-07	Lockwasher #10 Helical (SST)	2
51	WS-023-20	Washer	2
52	00-048088	Cover - Sealer Wiring Box	1
53	00-048097	Box - Sealer Wiring	1
54	WL-006-07	Lockwasher #10 Helical (SST)	1
55	SC-018-22	Mach. Screw 10-24 x 1/2 Phil. Pan Hd	1

BELT SEALER

ILLUS. PL-53478	PART NO.	NAME OF PART	AMT.
56	SC-018-22	Mach. Screw 10-24 x 1/2 Phil. Pan Hd	2
57	WL-006-07	Lockwasher #10 Helical (SST)	4
58	SC-122-99	Cap Screw 10-24 x 1/2 Hex Socket Hd	4
59	00-440501	Bracket Assy. - Sealer (RH)	1
60	NS-015-01	Nut 1/4-20 Hex SST	2
61	00-440500-00001	Brace - Sealer (RH)	1
62	SC-122-99	Cap Screw 10-24 x 1/2 Hex Socket Hd	4
63	WL-006-07	Lockwasher #10 Helical (SST)	4
64	00-048271	Bracket Sealet - Sensor	1

NOTES

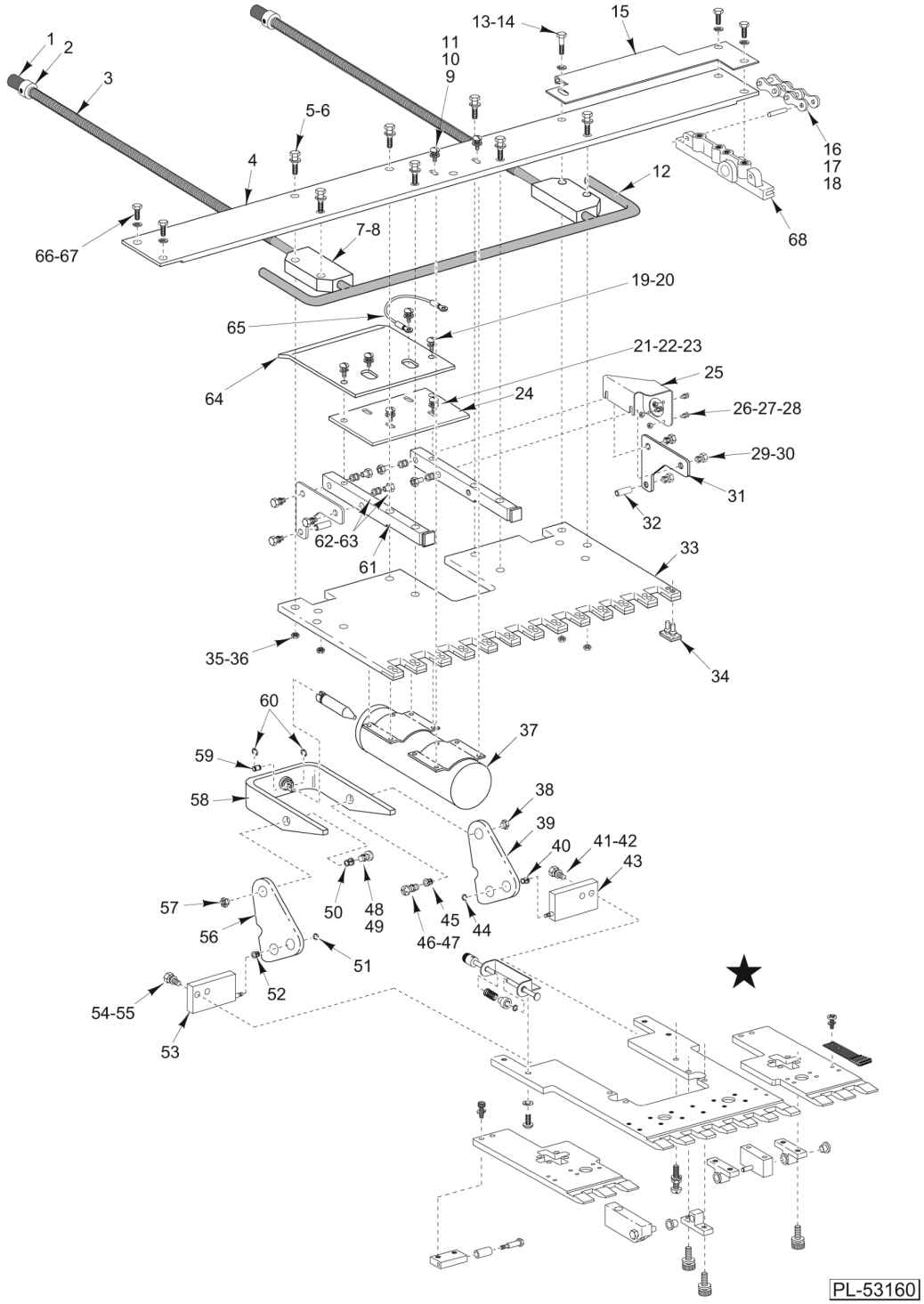

SPLIT GRIPPER UNIT

SPLIT GRIPPER UNIT

ILLUS. PL-53160	PART NO.	NAME OF PART	AMT.
1	00-049033	Bumper - Assy	2
2	SC-116-79	Set Screw 10-32 x 1/4 Hex Hdls., Cup Pt	2
3	00-047926	Spring - Film Unloader	2
4	00-042881	Bar - Gripper Support	1
5	SC-041-04	Cap Screw 1/4-20 x 1 3/4 Hex Hd. (SST)	4
6	WS-022-06	Washer	4
7	00-443501	Block - Film Rod	2
8	00-443502	Spacer - Film Rod Block	2
9	SC-018-23	Mach. Screw 8-32 x 5/8 Phil. Pan Hd	2
10	WL-013-08	Lockwasher #8 Internal Shakeproof	2
11	WS-023-22	Washer (SST)	2
12	00-047924	Unloader Assy. - Film	1
13	SC-041-07	Cap Screw 1/4-20 x 1-1/2 Hex Hd. (SST)	4
14	WS-022-06	Washer	4
15	00-042982	Bracket - Cable	1
16	00-046689	Chain - Assy. - Gripper (LH)	1
17	00-046690	Gripper - Chain Assy. (RH)	1
18	00-183722	Wire - Ground	1
19	SC-018-22	Mach. Screw 10-24 x 1/2 Phil. Pan Hd	2
20	WL-004-40	Lockwasher 10 Helical	2
21	SC-093-04	Mach. Screw 8-32 x 1/2 Phil. Pan Hd. (SST)	4
22	WL-013-08	Lockwasher #8 Internal Shakeproof	4
23	WS-023-22	Washer (SST)	4
24	00-183719	Plate - Solenoid Mounting	1
25	00-334763	Bracket - Gripper Plug	1
26	SC-113-10	Mach. Screw 4-40 x 3/8 Phil. Pan Hd	4
27	WL-008-45	Lockwasher #4 Internal Shakeproof	4
28	NS-009-02	Nut 4-40 Hex	4
29	SC-068-33	Mach. Screw 10-32 x 1/2 Hex Hd	6
30	WL-004-40	Lockwasher 10 Helical	6
31	00-334770	Plate - Gripper Support	2
32	00-332912	Spacer	2
33	00-049140	Plate - Gripper Upper	1
34	00-043452	Pad - Gripper (Gray) (Set of 13 Pads)	1
35	NS-038-08	Lock Nut 1/4-20 x 1 Hex	4
36	WL-003-38	Lockwasher 1/4 Helical	4
37	00-048536	Gripper - Solenoid Assy	1
38	00-183710	Stud - Link	1
39	00-441452	Link - Gripper Solenoid	1
40	00-175560	Bushing - Nyliner	1
41	SC-089-70	Mach. Screw 10-32 x 5/8 Hex Hd. (SST)	2
42	WL-004-40	Lockwasher 10 Helical	2
43	00-184124	Gripper - Block Assy. (LH)	1
44	RR-006-22	Retaining Ring 1/4 In. (SST)	1
45	00-175560	Bushing - Nyliner	1
46	SC-089-70	Mach. Screw 10-32 x 5/8 Hex Hd. (SST)	1
47	WL-004-40	Lockwasher 10 Helical	1
48	SC-089-70	Mach. Screw 10-32 x 5/8 Hex Hd. (SST)	1
49	WL-004-40	Lockwasher 10 Helical	1
50	00-175560	Bushing - Nyliner	1
51	RR-006-22	Retaining Ring 1/4 In. (SST)	1
52	00-175560	Bushing - Nyliner	1
53	00-184123	Gripper - Block Assy. (RH)	1
54	SC-089-70	Mach. Screw 10-32 x 5/8 Hex Hd. (SST)	2
55	WL-004-40	Lockwasher 10 Helical	2

SPLIT GRIPPER UNIT

ILLUS. PL-53160	PART NO.	NAME OF PART	AMT.
56	00-441452	Link - Gripper Solenoid	1
57	00-183710	Stud - Link	1
58	00-184845	Bracket - Gripper Solenoid	1
59	00-175936	Pin - Rod	1
60	RR-006-11	Retaining Ring	2
61	00-183718	Bar - Roller Support	2
62	00-183713	Stud - Roller	4
63	00-183714	Roller - Gripper	4
64	00-441763	Plate - Solenoid Cover	1
65	00-183722	Wire - Ground	1
66	SC-125-22	Mach. Screw 1/4 -20 x 5/8 Truss Hd	4
67	WL-008-17	Lockwasher 1/4 Internal	4
68	00-440591	Block - Gripper Slide	2

NOTES

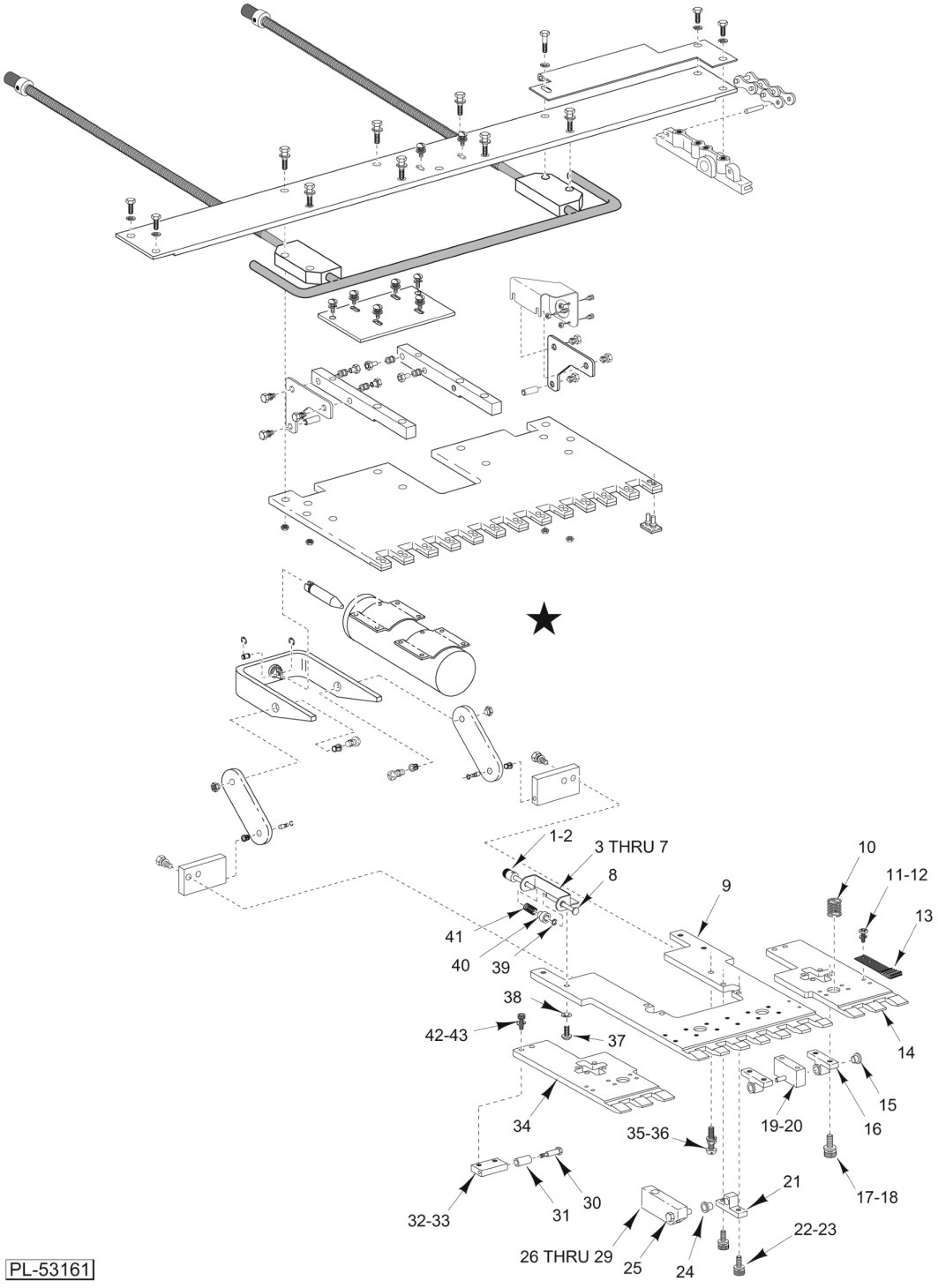

SPLIT GRIPPER UNIT

SPLIT GRIPPER UNIT

ILLUS. PL-53161	PART NO.	NAME OF PART	AMT.
1	00-049033	Bumper - Assy	2
2	SC-116-79	Set Screw 10-32 x 1/4 Hex Hdls., Cup Pt	2
3	00-049129	Bracket - Plunger	2
4	00-175560	Bushing - Nyliner	4
5	00-044508-00001	Shim - Plastic (0.005")	AR
6	00-044508-00002	Shim - Plastic (0.010")	AR
7	00-044508-00003	Shim - Plastic (0.015")	AR
8	00-049131	Shaft - Plunger	2
9	00-049136	Plate - Gripper (Lower Center)	1
10	00-444985	Spring - Gripper Jaw	4
11	SC-120-35	Mach. Screw 8-32 x 3/8 Phil. Pan Hd. (SST)	26
12	WL-006-02	Lockwasher #8 Helical	26
13	00-332404	Gripper Spring Assy	13
14	00-049137	Plate - Gripper Lower (LH)	1
15	00-183765	Bearing - Nyliner	4
16	00-043890	Pivot - Gripper Plate	2
17	SC-089-70	Cap Screw 10-32 x 5/8 Hex Socket Hd	4
18	WL-004-40	Lockwasher 10 Helical	4
19	00-049152	Block Assy. - Gripper Pivot	2
20	SC-022-33	Mach. Screw 1/4-20 x 3/4 Slotted Flat Hd. (SST)	4
21	00-043890	Pivot - Gripper Plate	2
22	SC-089-70	Cap Screw 10-32 x 5/8 Hex Socket Hd	4
23	WL-004-40	Lockwasher 10 Helical	4
24	00-183765	Bearing - Nyliner	2
25	00-175713	Stud - Hinge	2
26	00-334865	Spacer - Bottom Plate	2
27	00-044508-00001	Shim - Plastic (0.005")	AR
28	00-044508-00002	Shim - Plastic (0.010")	AR
29	00-044508-00003	Shim - Plastic (0.015")	AR
30	00-049130	Screw - Roller	2
31	00-049133	Roller - Plunger	2
32	00-049134	Block - Roller Mounting	2
33	00-049142	Shim - Roller Block	AR
34	00-049138	Plate - Gripper Lower (RH)	1
35	SC-009-91	Mach. Screw 1/4-20 x 11/4 Rd. Hd	1
36	NS-038-08	Lock Nut 1/4-20 x 1 Hex	1
37	SC-068-33	Mach. Screw 10-32 x 1/2 Hex Hd	4
38	WL-004-40	Lockwasher 10 Helical	4
39	RR-006-22	Retaining Ring 1/4 In. (SST)	2
40	00-049135	Collar - Spring	2
41	00-049132	Spring Plunger	2
42	SC-089-70	Cap Screw 10-32 x 5/8 Hex Socket Hd	4
43	WL-004-40	Lockwasher 10 Helical	4

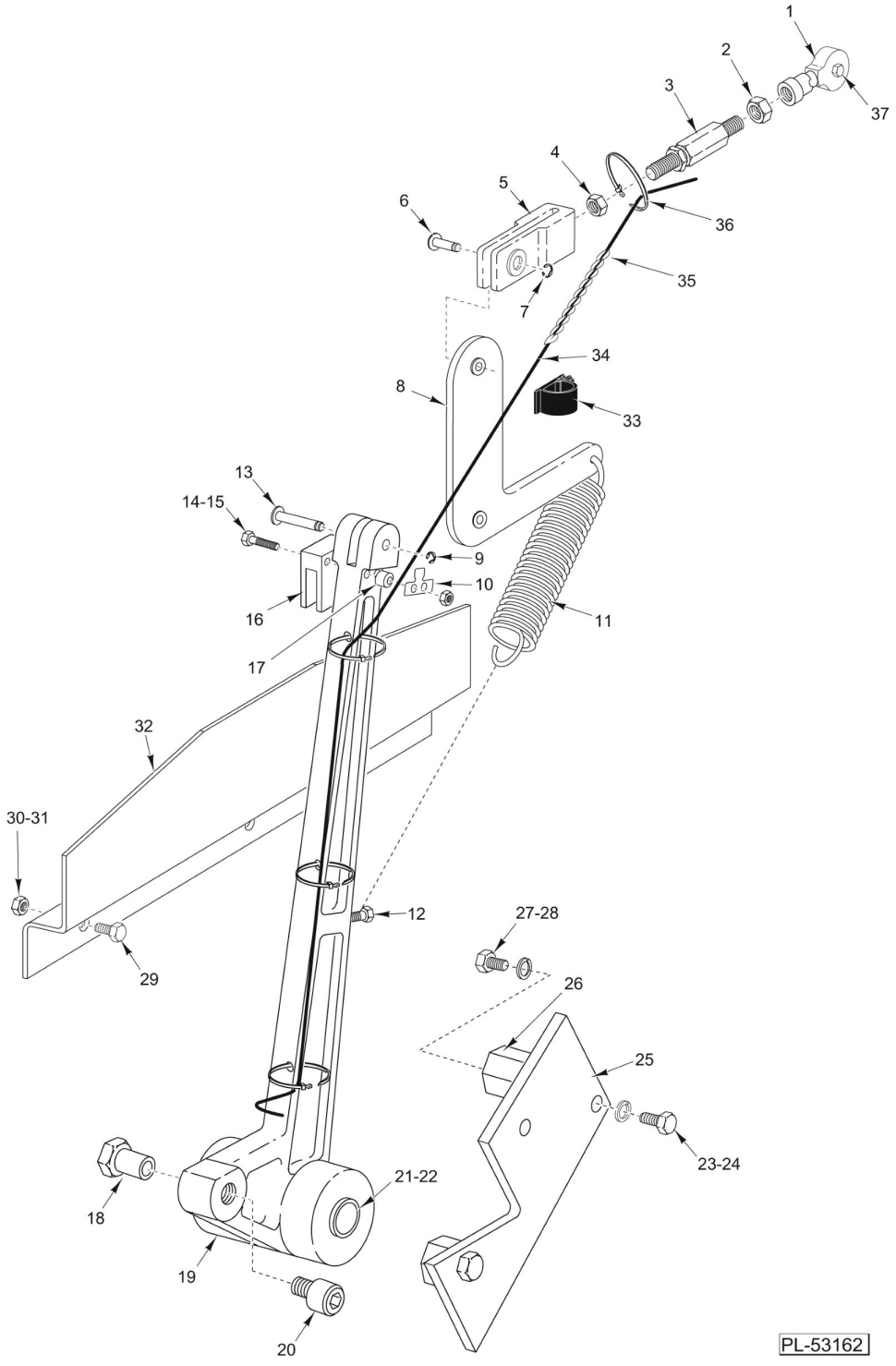

GRIPPER LEVER

GRIPPER LEVER

ILLUS. PL-53162	PART NO.	NAME OF PART	AMT.
1	00-334056	Bearing - LH Thread	1
2	NS-013-28	Nut 3/8 -24 Hex (LH Thread)	1
3	00-184001	Rod - Link	1
4	NS-013-27	Nut 3/8 -24 Hex (RH Thread)	1
5	00-334791	Yoke Assy	1
6	00-175743	Pin - Lever Link	1
7	RR-009-10	Retaining Ring 3/8 In. (SST)	1
8	00-175744	Lever Extension Assy	1
9	RR-009-10	Retaining Ring 3/8 In. (SST)	1
10	00-049597	Bracket - Gripper Cable	1
11	00-043901	Spring - Gripper Lever	1
12	SC-116-83	Cap Screw 3/8-16 x 1 1/2 Hex Hd	1
13	00-175982	Pin (Lever To Lever)	1
14	SC-118-57	Cap Screw 1/4 -20 x 21/2 Hex Hd	2
15	NS-031-20	Stop Nut 1/4 -20 Hex	2
16	00-175735	Block - Slide Bar	1
17	00-333750	Spacer	2
18	00-175742	Nut - Follower Bearing	1
19	00-175736	Lever - Gripper	1
20	00-259547	Cam - Follower	1
21	00-086680	Bearing	2
22	00-175739	Shaft - Gripper Lever	1
23	SC-118-10	Cap Screw 3/8-16 x 1 Hex Hd	2
24	WL-004-06	Lockwasher 3/8 Helical	2
25	00-175741	Plate - Lever Support	1
26	00-175740	Spacer - Lever Support	2
27	SC-118-09	Cap Screw 3/8-16 x 11/4 Hex Hd	2
28	WL-004-06	Lockwasher 3/8 Helical	2
29	SC-118-19	Cap Screw 1/4-20 x 3/4 Hex Hd	3
30	WL-003-38	Lockwasher 1/4 Helical	3
31	NS-013-02	Nut 1/4 -20 Hex	3
32	00-175734	Bracket - Slide Bar	1
33	00-106825-00001	Clip - Wiring	1
34	00-048537	Cable Assy. - Gripper (Incls. Item 35)	1
35	00-049600-00001	Wrap - Spiral	1
36	00-255502	Tie - Cable Locking	AR
37	00-183431	Screw - Gripper Lever	1
	00-175978	Gripper Lever Assy. (Incls. Items 1 thru 21)	1

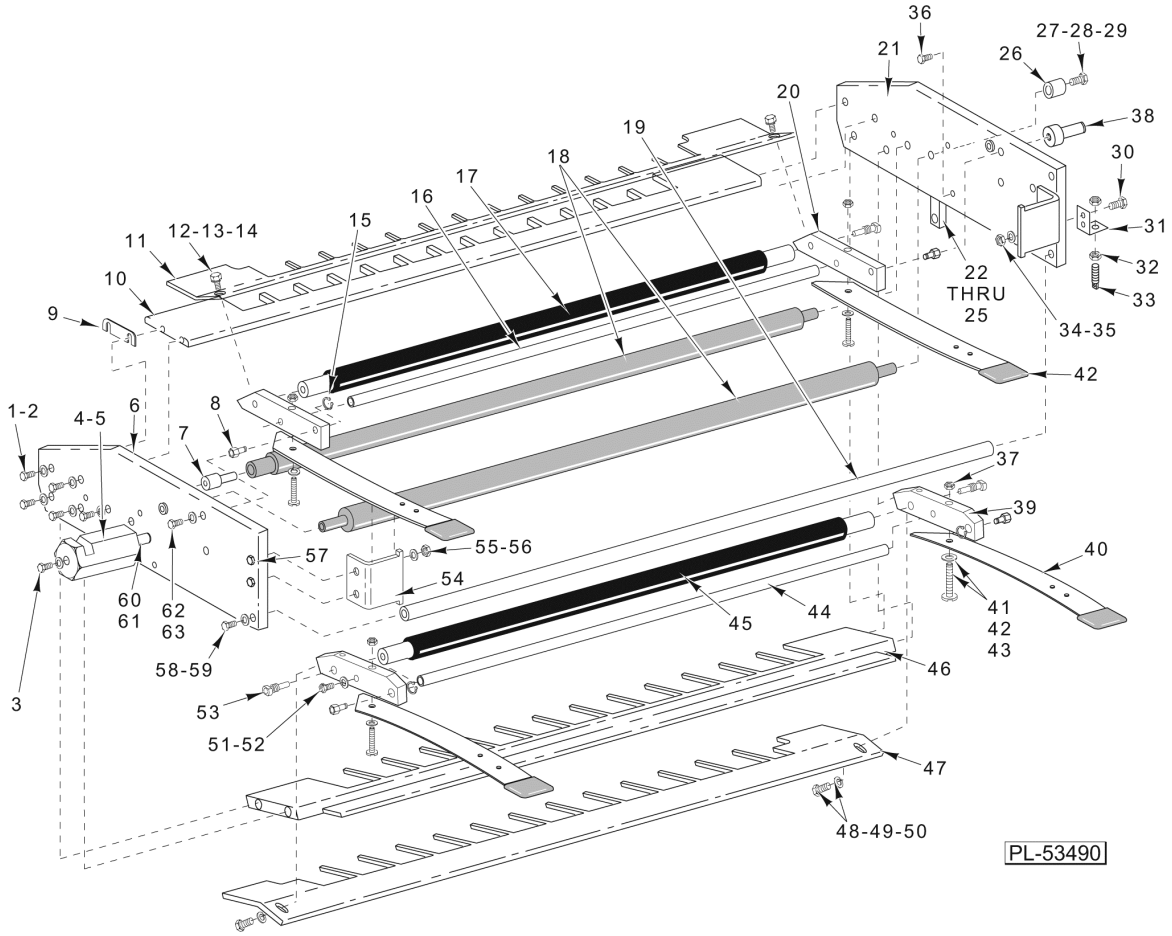

FILM SELECTOR UNIT

FILM SELECTOR UNIT

ILLUS. PL-53490	PART NO.	NAME OF PART	AMT.
1	SC-068-33	Mach. Screw 10-32 x 1/2 Hex Hd	8
2	WL-004-40	Lockwasher 10 Helical	8
3	SC-123-94	Cap Screw 3/8-16 x 3/4 Hex Washer Hd	2
4	00-175690	Stud - Film Guide	2
5	SC-047-72	Set Screw 1/4 -20 x 3/8 Hex Hdls., Cup Pt	2
6	00-184357	Frame Assy. (RH)	1
7	00-175627	Stud - Bearing (Used With Item 18)	4
8	00-175618	Stud - Arm Pivot	4
9	00-047076	Shim - Film Selector	AR
10	00-044630	Guide - Top Film	1
11	00-175622	Guide - Film Changer	1
12	SC-068-33	Mach. Screw 10-32 x 1/2 Hex Hd	2
13	WL-004-40	Lockwasher 10 Helical	2
14	WS-019-02	Washer	2
15	RR-004-02	Retaining Ring	4
16	00-175621	Rod - Tie	1
17	00-175613	Tapered Roller Assy	1
18	00-044234	Shaft Assy. - Film Selector (Metal)	1
19	00-184351	Rod - Tie	1
20	00-175619	Arm - Top Roller	2
21	00-184356	Frame Assy. (LH)	1
22	00-183547	Link - Film Solenoid	1
23	00-443088	Stud - Film Arm	1
24	WL-004-40	Lockwasher 10 Helical	1
25	SC-068-31	Mach. Screw 10-32 x 3/4 Hex Hd	1
26	00-183548	Spacer - Solenoid Link	1
27	SC-068-31	Mach. Screw 10-32 x 3/4 Hex Hd	1
28	WS-019-02	Washer	2
29	WL-004-40	Lockwasher 10 Helical	2
30	SC-068-33	Mach. Screw 10-32 x 1/2 Hex Hd	2
31	00-441762	Angle - Spring Adjusting	1
32	NS-013-07	Nut 1/4-28 Hex	2
33	00-175944	Pin - Threaded	1
34	WL-004-40	Lockwasher 10 Helical	2
35	NS-009-30	Nut 10-32 Hex	2
36	SC-068-31	Mach. Screw 10-32 x 3/4 Hex Hd	6
37	NS-009-30	Nut 10-32 Hex	4
38	00-443088	Stud - Changer Solenoid	1
39	00-175620	Arm - Bottom Roller	2
40	00-442428	Spring Handle Assy	4
41	WL-004-40	Lockwasher 10 Helical	4
42	SC-081-18	Mach. Screw 10-32 x 11/8 Rd. Hd	4
43	WS-019-02	Washer	4
44	00-175621	Rod - Tie	1
45	00-175613	Tapered Roller Assy	1
46	00-044628	Guide - Narrow Film	1
47	00-175622	Guide - Film Changer	1
48	SC-068-33	Mach. Screw 10-32 x 1/2 Hex Hd	2
49	WL-004-40	Lockwasher 10 Helical	2
50	WS-019-02	Washer	2
51	SC-068-31	Mach. Screw 10-32 x 3/4 Hex Hd	4
52	WL-004-40	Lockwasher 10 Helical	1
53	00-175628	Stud - Film Roller (Used With Items 17 & 45)	4
54	00-175626	Stop - Spring Handle	2
55	WL-004-40	Lockwasher 10 Helical	2

FILM SELECTOR UNIT

ILLUS. PL-53490	PART NO.	NAME OF PART	AMT.
56	NS-009-30	Nut 10-32 Hex	2
57	SC-068-33	Mach. Screw 10-32 x 1/2 Hex Hd	2
58	SC-068-33	Mach. Screw 10-32 x 1/2 Hex Hd	2
59	WL-004-40	Lockwasher 10 Helical	2
60	00-175691	Pivot - Film Guide	2
61	RR-004-05	Retaining Ring	2
62	SC-068-33	Mach. Screw 10-32 x 1/2 Hex Hd	4
63	WL-004-40	Lockwasher 10 Helical	4

NOTES

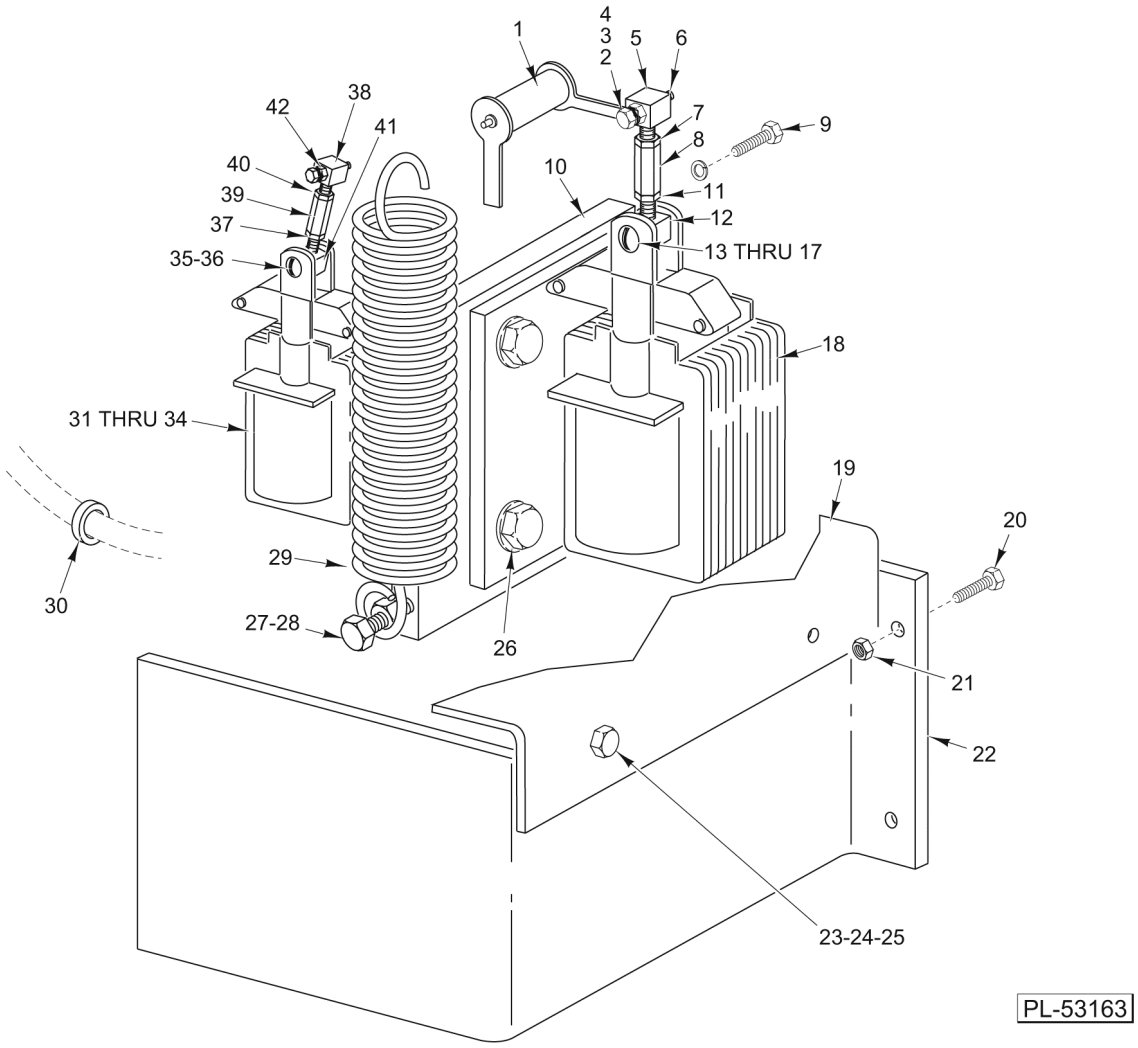

FILM CHANGER SOLENOID ASSEMBLY

FILM CHANGER SOLENOID ASSEMBLY

ILLUS. PL-53163	PART NO.	NAME OF PART	AMT.
1	00-175990	Crank Assy.	1
2	SC-089-69	Cap Screw 10-32 x 1/2 Hex Socket Hd.	1
3	WL-004-40	Lockwasher 10 Helical	1
4	RR-004-02	Retaining Ring	1
5	00-175634	Block - Solenoid Link (LH)	1
6	00-175993	Stud - Crank	1
7	NS-013-08	Nut 1/4-28 Hex (LH Thread)	1
8	00-175636	Block - Take-Up	1
9	SC-110-12	Mach. Screw 5/16-18 x 3/4 Hex Hd.	2
10	00-175638	Block - Solenoid Mounting	1
11	NS-013-07	Nut 1/4 -28 Hex (RH Thread)	1
12	00-175635	Block - Solenoid Link (RH)	1
13	SC-081-20	Mach. Screw 10-32 x 13/8 Rd. Hd.	1
14	00-175984	Spacer - Solenoid	1
15	RR-004-02	Retaining Ring	2
16	NS-009-30	Nut 10-32 Hex	1
17	WL-004-40	Lockwasher 10 Helical	1
18	00-048192	Solenoid (Narrow Film) (220 V., 60 Hz.)	1
19	00-183966	Cover - Film Changer Top	1
20	SC-123-92	Mach. Screw 1/4-20 x 5/8 Hex Washer Hd.	2
21	NS-038-08	Lock Nut 1/4 -20 Hex	2
22	00-183932	Cover - Film Changer	1
23	SD-015-41	Self-Tapping Screw 8-32 x 1/2 Phil. Pan Hd., Taptite	2
24	00-086878	Nut - Tinnerman	2
25	WL-003-12	Lockwasher #8 Helical	2
26	SC-123-92	Mach. Screw 1/4-20 x 5/8 Hex Washer Hd.	4
27	SC-117-91	Cap Screw 1/4 -20 x 1 Hex Hd.	1
28	NS-038-08	Lock Nut 1/4 -20 Hex	1
29	00-175834	Spring - Knife	1
30	FE-021-13	Bushing (Nylon) 1/2 I.D.	1
31	00-048191	Solenoid (Wide Film) (220 V., 60 Hz.)	1
32	SC-037-80	Mach. Screw 10-24 x 1/2 Hex Hd.	4
33	WL-004-40	Lockwasher 10 Helical	4
34	WS-019-06	Washer	6
35	00-183944	Pin - Film Solenoid	1
36	RR-011-69	Retaining Ring	2
37	NS-013-07	Nut 1/4-28 Hex (RH Thread)	1
38	00-183590	Block - Film Solenoid	1
39	00-183591	Rod - Film Adjust	1
40	NS-013-08	Nut 1/4-28 (LH Thread)	1
41	00-330072	Block - Chain (RH)	1
42	RR-004-02	Retaining Ring	1
	00-046995	Solenoid Cable Assy. (Not Shown)	2
	00-175633	Link Assy. Solenoid (Incls. Items 5, 7, 8, 11, & 12)	1

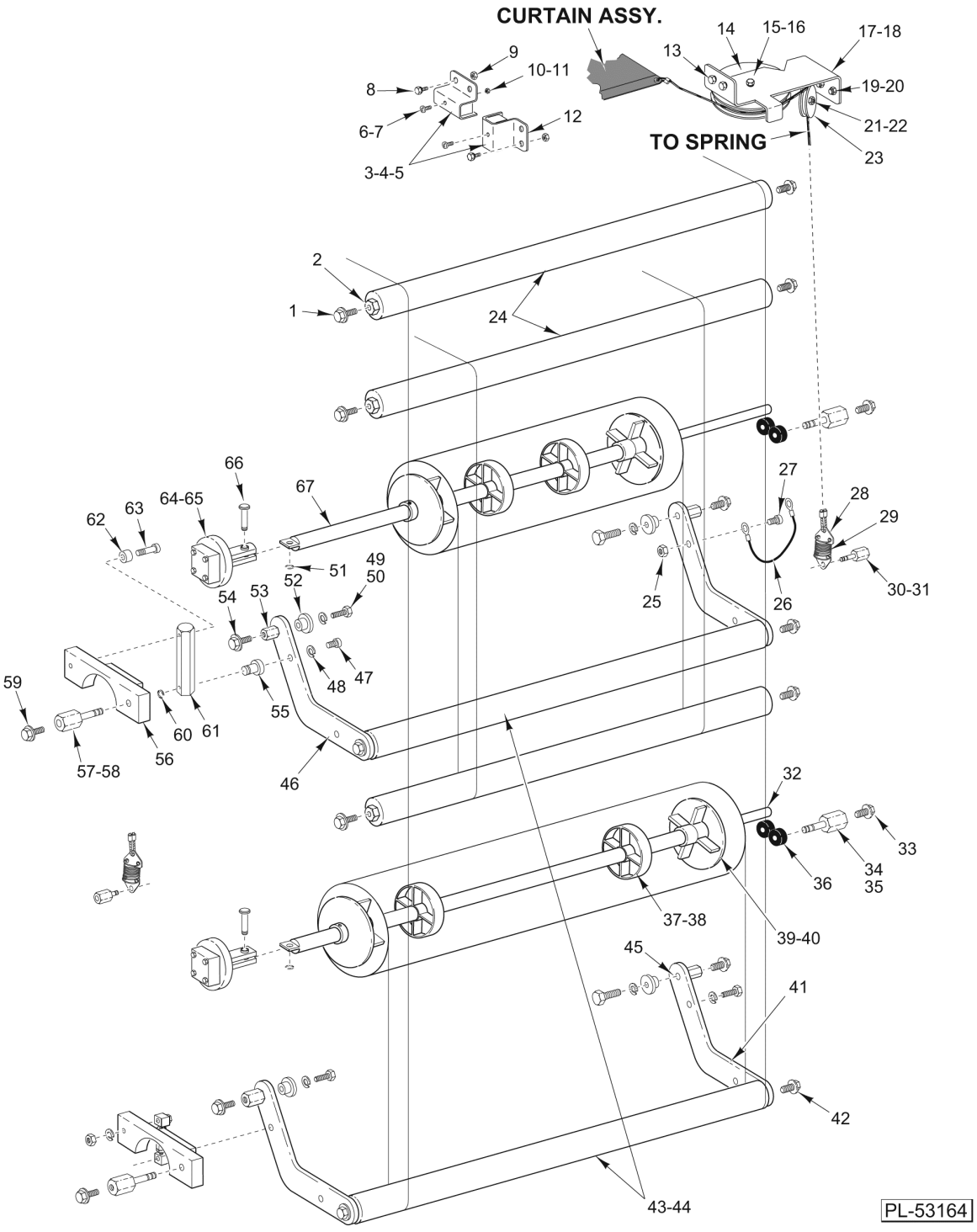

FILM SUPPLY UNIT

FILM SUPPLY UNIT

ILLUS. PL-53164	PART NO.	NAME OF PART	AMT.
1	SC-123-92	Mach. Screw 1/4-20 x 5/8 Hex Washer Hd	4
2	00-175611	Roller - Support Spacer	4
3	00-042180	Switch - Retro Photo (Switch Only)	1
4	00-046955	Film Supply Switch Cable Assy. (Narrow) (Incls. Item 3)	1
5	00-046956	Film Supply Switch Cable Assy. (Wide) (Incls. Item 3)	1
6	SC-018-51	Mach. Screw 4-40 x 5/8 Slotted Pan Hd	2
7	WS-029-24	Washer	2
8	SC-123-92	Mach. Screw 1/4-20 x 5/8 Hex Washer Hd	4
9	NS-038-08	Lock Nut 1/4-20 x 1 Hex	4
10	NS-009-02	Nut 4-40 Hex	2
11	WL-003-03	Lockwasher #4 Helical	2
12	00-183680	Bracket - Out-Of-Film Switch	2
13	SC-100-08	Mach. Screw 1/4-20 x 3/8 Hex Washer Hd. Whiz-Loc	4
14	00-044160	Roller - Cable	2
15	00-044165	Stud - Pulley	2
16	SC-100-08	Mach. Screw 1/4-20 x 3/8 Hex Washer Hd. Whiz-Loc	2
17	00-044172	Bracket - Roller (LH)	1
18	00-044171	Bracket - Roller (RH)	1
19	SC-123-92	Mach. Screw 1/4-20 x 5/8 Hex Washer Hd	4
20	NS-038-04	Lock Nut 1/4-20 Hex	4
21	00-044165	Stud - Pulley	2
22	SC-100-08	Mach. Screw 1/4-20 x 3/8 Hex Washer Hd. Whiz-Loc	2
23	00-044161	Roller - Cable	2
24	00-175598	Film Roller Assy	2
25	NS-031-49	Nut 10-32 Hex	2
26	00-041480	Ground Wire Assy	2
27	SC-089-69	Cap Screw 10-32 x 1/2 Hex Socket Hd	2
28	00-049044	Hook - Spring Assy. (Incls. Springs, Cables, Etc.)	2
29	00-044458	Spring - Curtain	2
30	00-044229	Stud - Brake Arm Assy. (Use With Curtain Assy.)	1
31	RR-009-10	Retaining Ring 3/8 In. (SST)	1
32	00-183829	Film Shaft & Bearing Assy	2
33	SC-100-12	Mach. Screw 5/16-18 x 3/4 Hex Washer Hd. Whiz-Loc	4
34	RR-010-12	Retaining Ring	4
35	00-043414	Stud - Film Arbor Roller	4
36	00-183773	Roller - Arbor	4
37	00-183778	Disc - Arbor	4
38	RR-011-06	Retaining Ring	8
39	00-446880	Core - Film	4
40	SC-119-82	Set Screw 5/16-18 x 5/8 (SST)	8
41	00-047352	Dancer Arm Assy. (RH) (Incls. Item 45)	2
42	SC-100-12	Mach. Screw 5/16-18 x 3/4 Hex Washer Hd. Whiz-Loc	4
43	00-183800	Dancer Roller Assy	2
44	00-183777	Shaft - Roller	2
45	00-042883	Bearing - Flange	4
46	00-047351	Dancer Arm Assy. (LH) (Incls. Item 45)	2
47	SC-089-69	Cap Screw 10-32 x 1/2 Hex Socket Hd	2
48	WL-004-40	Lockwasher 10 Helical	4
49	SC-118-17	Cap Screw 1/4 -20 x 11/4 Hex Hd	4
50	WL-003-38	Lockwasher 1/4 Helical	4
51	RR-004-02	Retaining Ring	2
52	00-047350	Dancer - Pivot	4
53	00-175603	Stand-Off - Dancer	4
54	SC-100-12	Mach. Screw 5/16-18 x 3/4 Hex Washer Hd. Whiz-Loc	1
55	00-443088	Stud - Film Arm	2

FILM SUPPLY UNIT

ILLUS. PL-53164	PART NO.	NAME OF PART	AMT.
56	00-183796	Brake Arm Assy	2
57	00-044229	Stud - Brake Arm Assy. (Use With Curtain Assy.)	1
58	RR-009-10	Retaining Ring 3/8 In. (SST)	2
59	SC-100-12	Mach. Screw 5/16-18 x 3/4 Hex Washer Hd. Whiz-Loc	2
60	RR-004-02	Retaining Ring	2
61	00-443087	Link - Brake Arm	2
62	00-183837	Sleeve - Brake Link	2
63	SC-089-79	Cap Screw 10-32 x 1 Hex Socket Hd	2
64	SC-100-12	Mach. Screw 5/16-18 x 3/4 Hex Washer Hd. Whiz-Loc	8
65	00-043417	Arbor & Bearing Assy	2
66	00-183770	Pin - Arbor	2
67	00-183829	Film Shaft & Bearing Assy	2
	00-441131	Label - Film Thread	1

NOTES

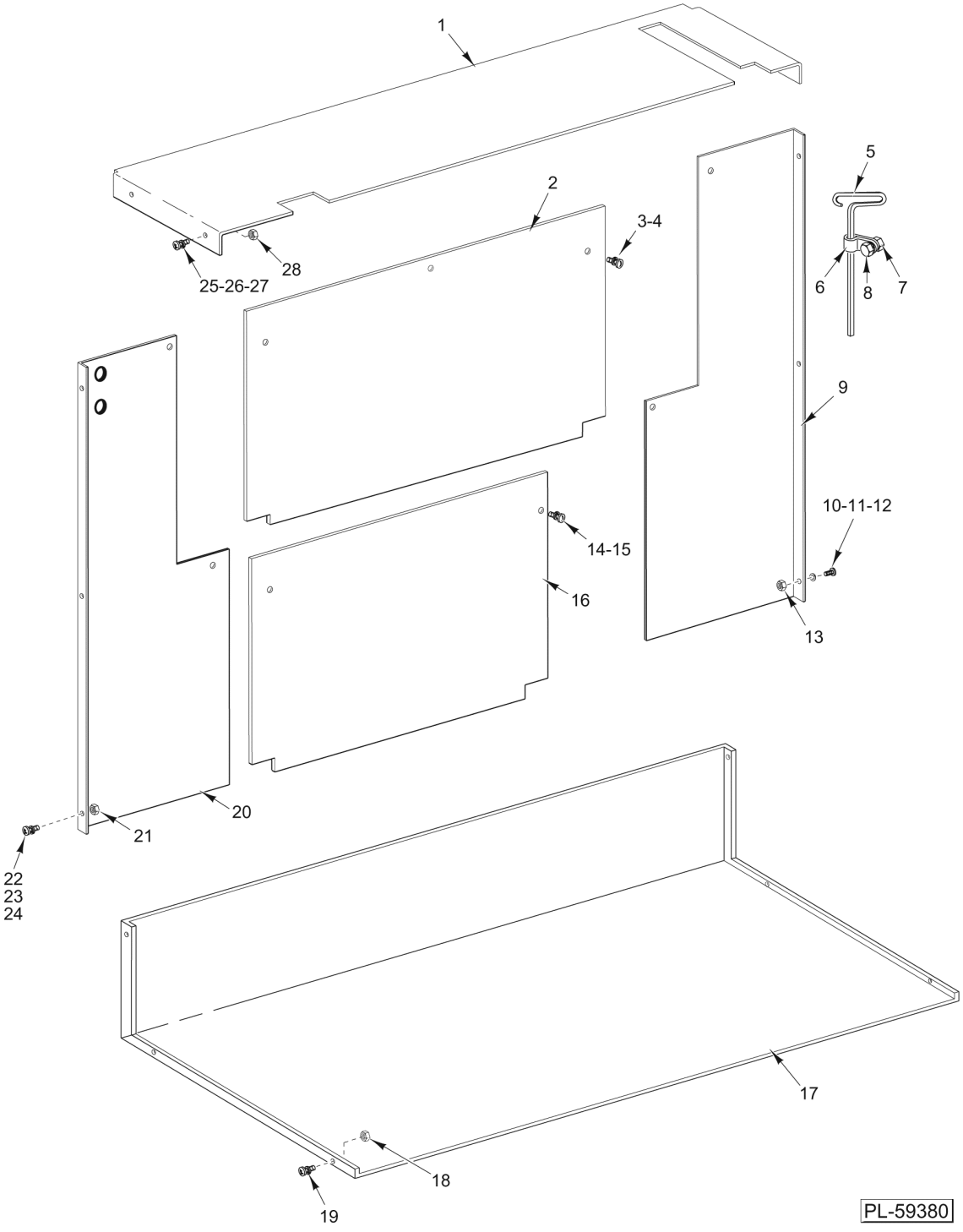

FILM CHAMBER

FILM CHAMBER

ILLUS. PL-59380	PART NO.	NAME OF PART	AMT.
1	00-175592	Top - Chamber	1
2	00-175597	Plate - Rear Upper	1
3	SD-015-41	Self-Tapping Screw 8-32 x 1/2 Phil. Pan Hd., Type TT	3
4	00-086878	Nut - Tinnerman	3
5	00-518938	Key (T-Handle 5/32)	1
6	00-332284	Clamp - Conduit	1
7	NS-038-08	Lock Nut 1/4 -20 Hex	1
8	SC-123-92	Mach. Screw 5/16-18 x 5/8 Hex Washer Hd. Whiz-Loc	1
9	00-175595	Side - Chamber (LH)	1
10	SC-123-74	Mach. Screw 8-32 x 5/8 Phil. Pan Hd. (SST)	3
11	WL-003-12	Lockwasher #8 Helical	3
12	WS-023-23	Washer	3
13	NS-009-12	Nut 8-32 Hex	3
14	SD-015-41	Self-Tapping Screw 8-32 x 1/2 Phil. Pan Hd., Type TT	2
15	00-086878	Nut - Tinnerman	2
16	00-175596	Plate - Rear Lower	1
17	00-044025-00001	Bottom Chamber Assy	1
18	NS-038-13	Lock Nut 10-24 Hex	4
19	SC-066-06	Mach. Screw 10-24 x 1/2 Phil. Truss Hd. (SST)	4
20	00-043492	Side - Chamber (RH)	1
21	NS-009-12	Nut 8-32 Hex	3
22	SC-123-74	Mach. Screw 8-32 x 5/8 Phil. Pan Hd. (SST)	3
23	WL-003-12	Lockwasher #8 Helical	3
24	WS-023-23	Washer	3
25	SC-123-74	Mach. Screw 8-32 x 5/8 Phil. Pan Hd. (SST)	4
26	WL-003-12	Lockwasher #8 Helical	4
27	WS-023-23	Washer	4
28	NS-009-12	Nut 8-32 Hex	4

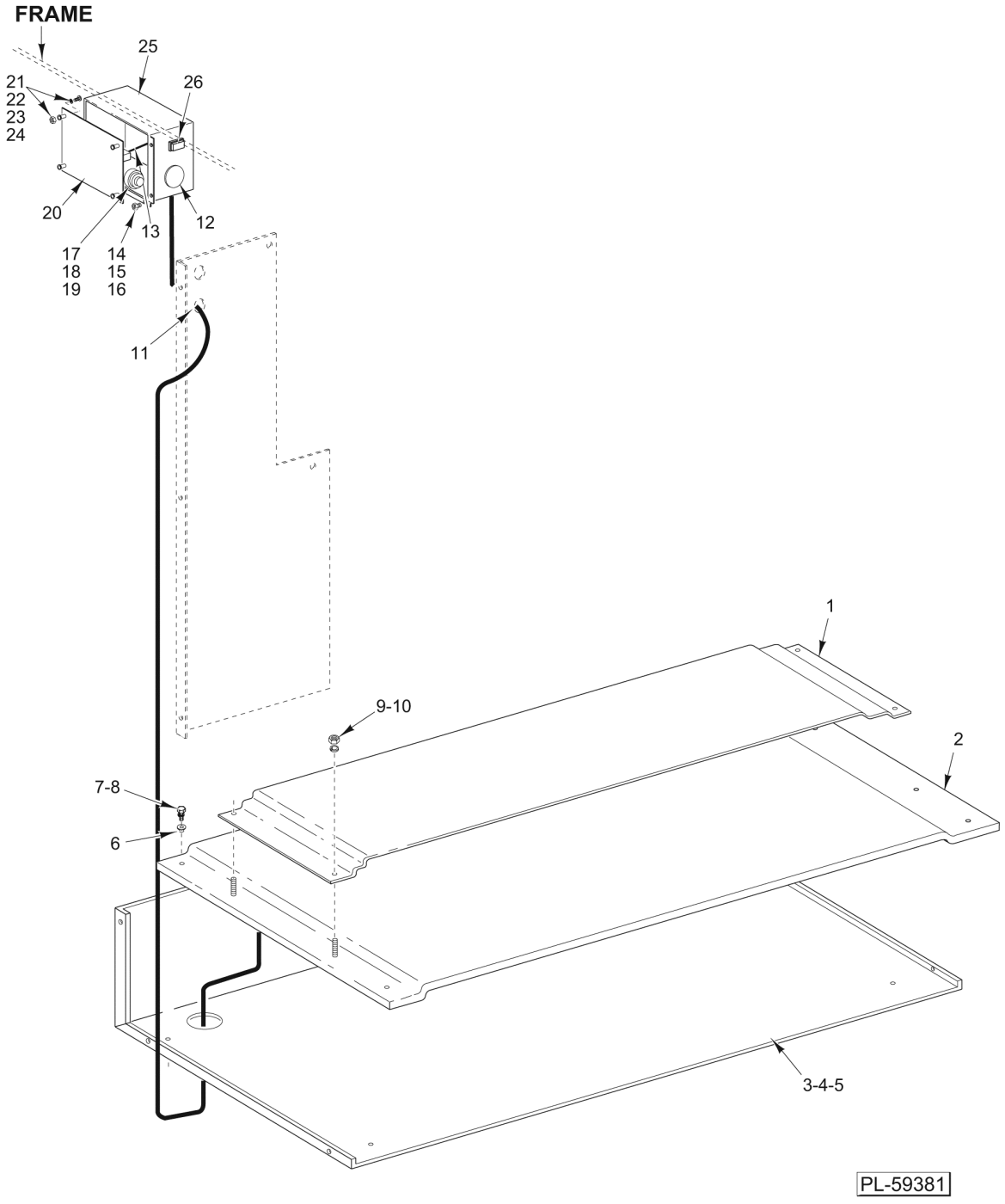

FILM HEATER(UNITS BUILT ON OR BEFORE 9/24/2002)

FILM HEATER(UNITS BUILT ON OR BEFORE 9/24/2002)

ILLUS. PL-59381	PART NO.	NAME OF PART	AMT.
1	00-043650	Cover - Heater	1
*2	00-XX	Heater Plate Assy	1
3	00-044025-00001	Bottom Chamber Assy	1
4	00-438131-00043	Label - Warning	1
5	00-334655-00001	Grommet - Caterpillar	1
6	00-043499	Bushing	4
7	SC-067-07	Mach. Screw 10-24 x 1/2 Hex Hd. (SST)	4
8	WL-006-07	Lockwasher #10 Helical (SST)	4
9	NS-011-12	Nut 8-32 Hex	4
10	WL-006-02	Lockwasher #8 Helical (SST)	4
11	FE-021-13	Bushing (Nylon) 1/2 I.D.	3
12	PB-004-01	Plug Button	1
13	00-043686-00001	Harness - Heater Splitter	1
14	SC-110-31	Mach. Screw 10-24 x 3/4 Hex Hd	4
15	WS-019-10	Washer (SST)	4
16	WL-006-07	Lockwasher #10 Helical (SST)	4
17	NS-031-03	Stop Nut 6-32 Hex	2
18	SC-018-28	Mach. Screw 6-32 x 1/4 Phil. Pan Hd	1
19	00-043898	Thermostat - Hi Limit	1
*20	00-XXXXX	Controller	1
21	SC-060-69	Mach. Screw 8-32 x 1 Rd. Hd	4
22	WL-008-07	Lockwasher 8 Internal Shakeproof	4
23	NS-011-12	Nut 8-32 Hex	4
24	WS-019-10	Washer (SST)	4
25	00-043902	Cover Assy. - Controller (Incls. Items 12, 17, 18, 19, & 26)	1
26	00-043687	Circuit Breaker (5 Amp.)	1

* This Item No Longer Available, Order Heater Assembly Kit 00-443699.

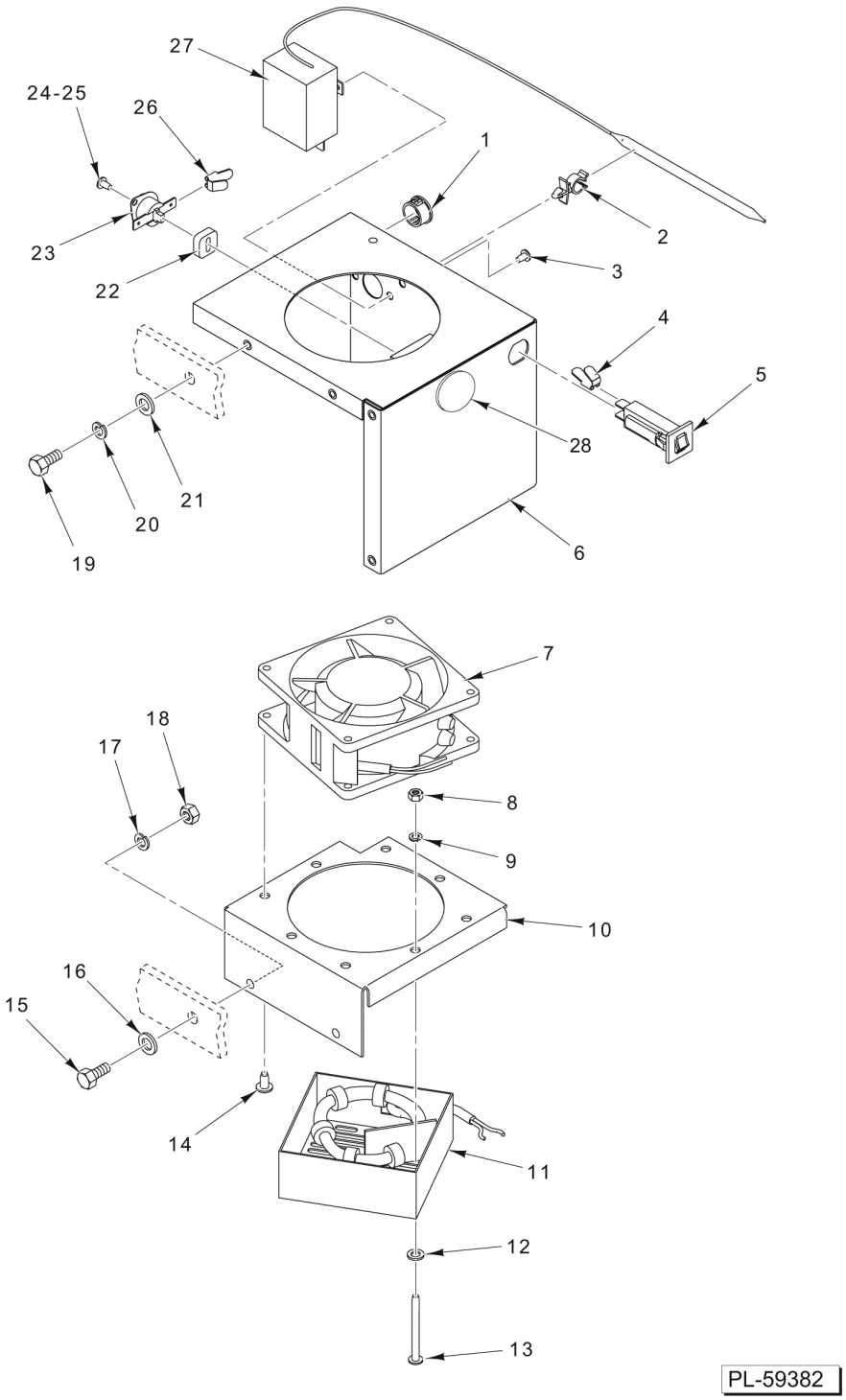

FILM HEATER
(PREVIOUS CONSTRUCTION)
(UNITS BUILT ON 9/25/2002 THRU 11/9/2004)

FILM HEATER
(PREVIOUS CONSTRUCTION)
(UNITS BUILT ON 9/25/2002 THRU 11/9/2004)

ILLUS. PL-59382	PART NO.	NAME OF PART	AMT.
1	FE-019-01	Bushing - Electrical Snap	1
2	00-442454	Standoff - Wire Mounting	2
3	SD-015-37	Self-Tapping Screw 6-32 x 1/4	2
4	00-130555	Tab - Adapter	1
5	00-043687	Breaker - Circuit (5 Amp.)	1
6	00-442424	Cover Assy. - Controller	1
7	00-442459	Fan Assy	1
8	NS-009-12	Nut 8-32 Hex	4
9	WL-003-12	Lockwasher #8 Helical	4
10	00-442418	Bracket - Fan Heater	1
11	00-442460	Heater Assy. - Axial Fan	1
12	WS-023-48	Washer	4
13	SC-081-12	Mach. Screw 8-32 x 1 1/2 Slotted Rd. Hd	4
14	SD-024-38	Self-Tapping Screw 10-32 x 3/8 Phil. Pan Hd., Type TT	4
15	SC-110-31	Mach. Screw 10-24 x 3/4 Hex Hd	2
16	WS-019-10	Washer (SST)	2
17	WL-006-07	Lockwasher #10 Helical	2
18	NS-009-22	Nut 10-24 Hex	2
19	SC-110-31	Mach. Screw 10-24 x 3/4 Hex Hd	4
20	WL-006-07	Lockwasher #10 Helical	4
21	WS-019-10	Washer (SST)	4
22	00-442585	Shield - Thermostat	1
23	00-442422	Thermostat - Hi-Limit	1
24	SC-018-28	Mach. Screw 6-32 x 1/4 Phil. Pan Hd	2
25	NS-031-03	Stop Nut 6-32 Hex	2
26	00-130555	Tab - Adapter	1
27	00-442423	Thermostat - Bulb & Capillary	1
28	PB-004-01	Plug Button	1
	00-442458	Wire Assy. (Thermostat to Breaker)	1

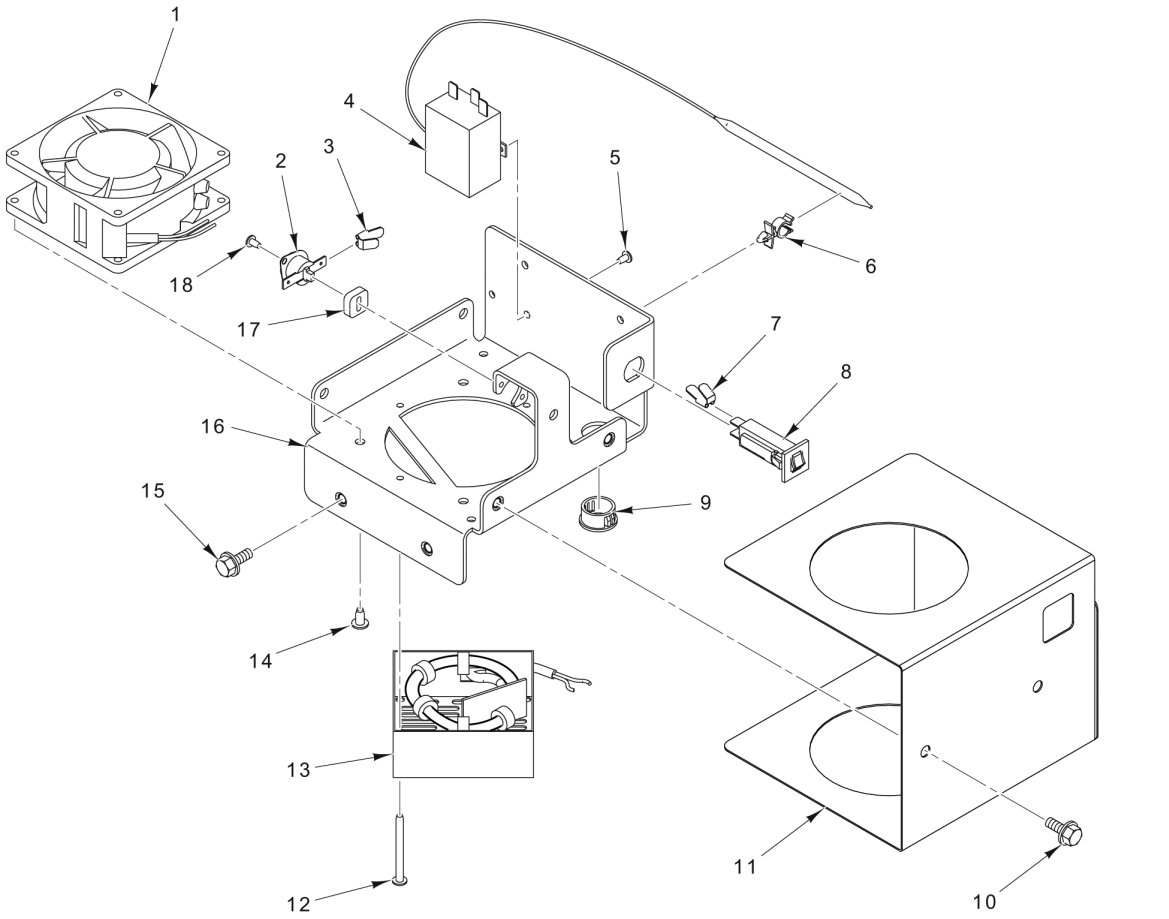

FILM HEATER(UNITS BUILT ON OR AFTER 11/10/2004)

FILM HEATER(UNITS BUILT ON OR AFTER 11/10/2004)

ILLUS. PL-59383	PART NO.	NAME OF PART	AMT.
1	00-442459	Fan Assy	1
2	00-442422	Thermostat - Hi-Limit	1
3	00-130555	Tab - Adapter	1
4	00-442423	Thermostat - Bulb & Capillary	1
5	SD-015-37	Self-Tapping Screw 6-32 x 1/4	2
6	00-442454	Standoff - Wire Mounting	2
7	00-130555	Tab - Adapter	1
8	00-043687	Breaker - Circuit (5 Amp.)	1
9	FE-016-32	Bushing - Electrical Snap	1
10	SC-123-92	Mach. Screw 1/4-20 x 5/8 Hex Washer Hd	2
11	00-443407	Cover - Heater	1
12	SD-038-05	Self-Tapping Screw 8-32 x 1-3/4 Phil. Pan Hd., Type TT	3
13	00-442460	Heater Assy. - Axial Fan	1
14	SD-024-38	Self-Tapping Screw 10-24 x 3/8 Phil. Pan Hd	4
15	SC-123-92	Mach. Screw 1/4-20 x 5/8 Hex Washer Hd	2
16	00-443408	Plate Assy. - Heater	1
17	00-442585	Shield - Thermostat	1
18	SD-015-37	Self-Tapping Screw 6-32 x 1/4	2

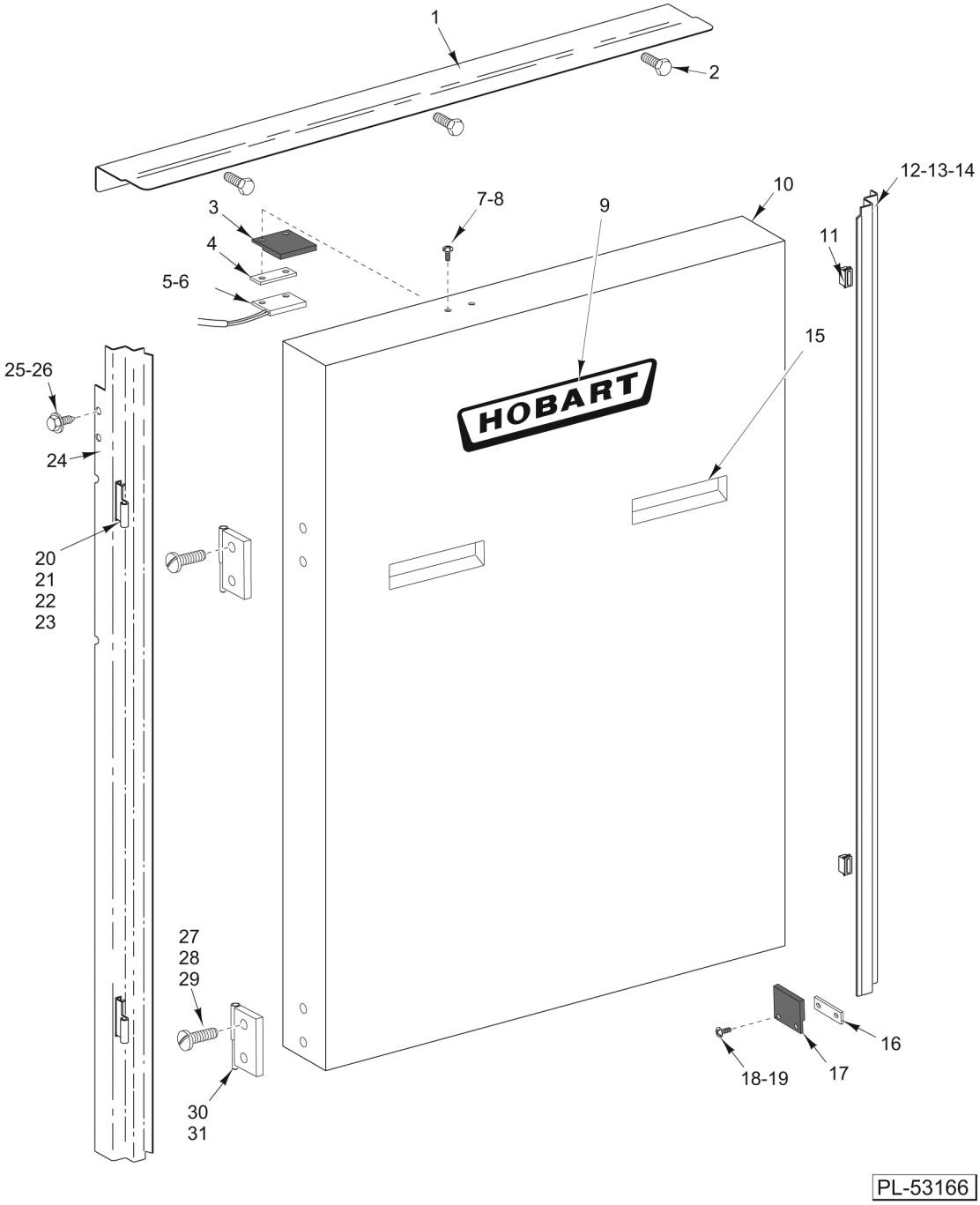

FILM ACCESS DOOR

FILM ACCESS DOOR

ILLUS. PL-53166	PART NO.	NAME OF PART	AMT.
1	00-048242	Strip - Top Trim	1
2	SD-024-18	Self-Tapping Screw 10-24 x 1/2 Hex Hd., Type TT	3
3	00-175999	Actuator - Magnetic	1
4	00-183396	Plate - Screw Switch	1
5	00-046952	Cable Assy. - Film Door (Incls. Item 6)	1
6	00-175998	Sensor	1
7	WL-003-03	Lockwasher #4 Helical	2
8	SC-021-02	Mach. Screw 4-40 x 1/2 Pan Hd	2
9	00-442432	Logo - Hobart (11 In.)	1
10	00-442430	Door - Film Access	1
11	00-041725	Catch - Magnet	3
12	00-043459	Strip - Side	1
13	SC-121-61	Mach. Screw 1/4-20 x 5/8 Hex Washer Hd., Whiz-Lock	2
14	WL-003-12	Lockwasher #8 Helical	2
15	00-442435	Pull - Door	2
16	00-183396	Plate - Screw Switch	1
17	00-175999	Actuator - Magnetic	1
18	WL-006-43	Lockwasher #4 Helical	2
19	SC-113-10	Mach. Screw 4-40 x 3/8 Phil. Pan Hd	2
20	00-043458	Hinge - Female (RH)	2
21	00-043475	Hinge - Female (LH)	2
22	SC-110-87	Mach. Screw 10-32 x 1/4 Phil. Pan Hd	4
23	WL-006-07	Lockwasher #10 Helical (SST)	4
24	00-043459	Strip - Side	1
25	SC-121-61	Mach. Screw 1/4-20 x 5/8 Hex Washer Hd., Whiz-Lock	2
26	WL-003-12	Lockwasher #8 Helical	2
27	SC-053-03	Mach. Screw 10-24 x 3/4 Slotted Truss Hd	4
28	NS-038-13	Lock Nut 10-24 Hex	4
29	WS-029-79	Washer	4
30	00-044849	Hinge Assy. - Bottom	1
31	00-044848	Hinge Assy. - Top	1

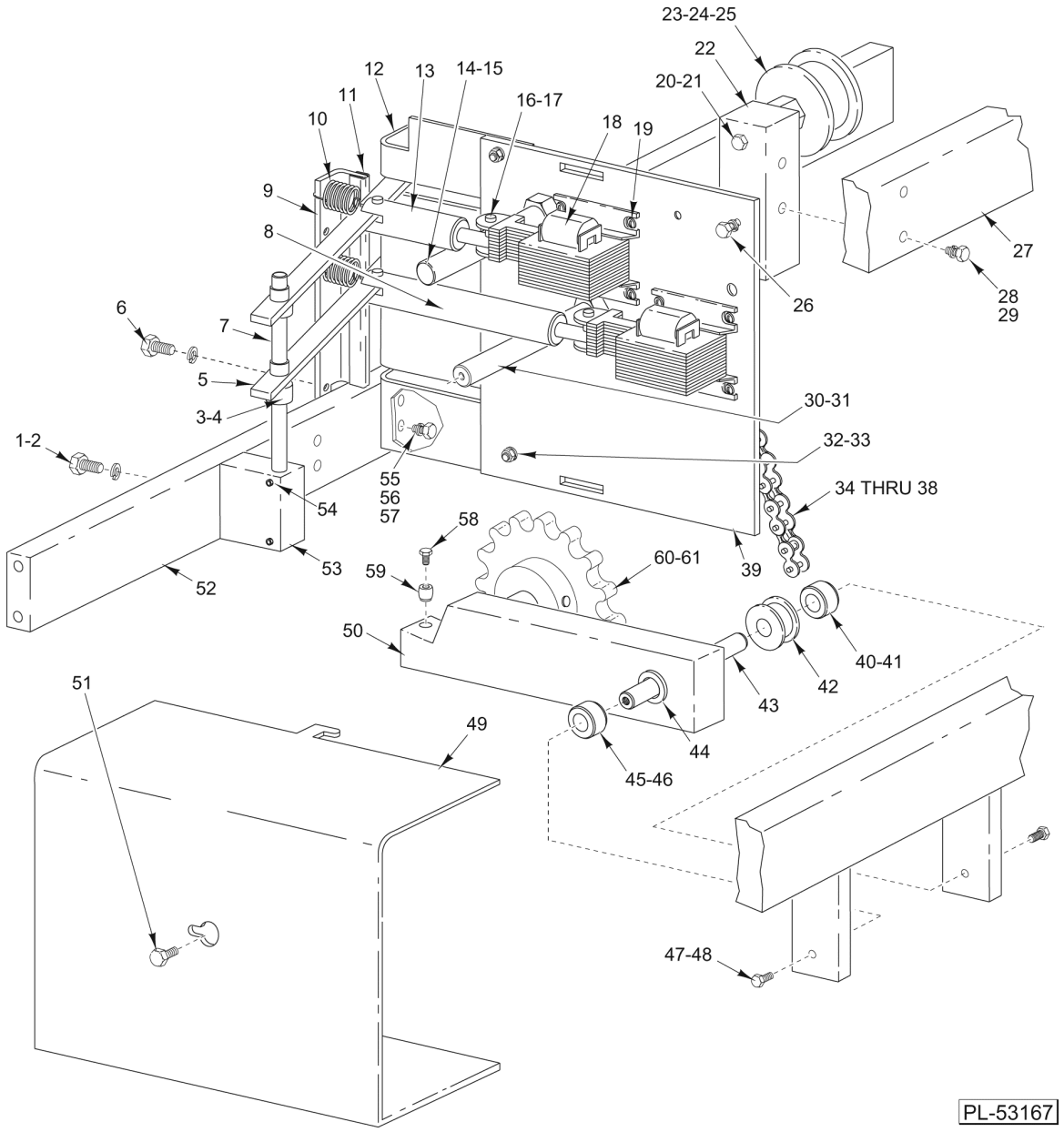
23-24-25
22
20-21
12
13
14-15
11
16-17
10
18
19
9
8
27
28
29
26
6
7
5
3-4
30-31
1-2
32-33
55
56
57
34 THRU 38
54
58
60-61
39
53
59
52
50
40-41
42
43
51
49
44
45-46
47-48
PL-53167

FILM LENGTH

FILM LENGTH

ILLUS. PL-53167	PART NO.	NAME OF PART	AMT.
1	SC-062-21	Cap Screw 5/16-18 x 1 1/4 Hex Hd	2
2	WL-003-47	Lockwasher 5/16 Helical	2
3	00-086710	Collar Assy. (Incls. Item 4)	2
4	SC-075-10	Set Screw 1/4-20 x 3/16 Hex Hdls., Cup Pt	2
5	00-175660	Latch - Pivot Assy	2
6	SC-100-12	Cap Screw 5/16-18 x 3/4 Hex Washer Hd	2
7	00-175652	Shaft - Lever Pivot	1
8	00-044320	Rod - Connecting (Long)	1
9	00-334764	Bracket - Spring	1
10	00-440474	Spring - Film Adjust	2
11	00-048090-00003	Protector - Edge	1
12	00-044330	Bracket - Latch Support	1
13	00-044319	Rod - Connecting (Short)	1
14	00-044337	Pin - Support	1
15	SC-121-61	Mach. Screw 1/4-20 x 5/8 Hex Washer Hd., Whiz-Lock (Mounts Item 14 to Plate)	1
16	00-044321	Pin	4
17	RR-011-69	Retaining Ring	4
18	00-048293	Solenoid Assembly (Film Pull) (220-230 V., 50-60 Hz.)	1
	00-048190	Solenoid - Film Length (220-230/50-60 Hz) Indiviual Solenoid Valve	2
19	SD-024-18	Self-Tapping Screw 10-24 x 1/2 Hex Hd., Type TT	8
20	SC-116-83	Cap Screw 3/8-16 x 1 1/2 Hex Hd	1
21	WL-004-06	Lockwasher 3/8 Helical	1
22	00-175658	Block - Idler Mounting	1
23	00-047828	Roller - Film Adjust. Chain	1
24	00-047825	Stud - Film Adjust Idler	1
25	RR-008-13	Retaining Ring	1
26	SC-040-65	Cap Screw 5/16-18 x 5/8 Hex Socket Hd	2
27	00-175645	Bar & Block Assy	1
28	SC-100-12	Cap Screw 5/16-18 x 11/4 Hex Washer Hd	4
29	WL-003-47	Lockwasher 5/16 Helical	4
30	00-044298	Pin - Standoff Support	1
31	SC-121-61	Mach. Screw 1/4-20 x 5/8 Hex Washer Hd. (Mounts Item 30 to Plate)	2
32	SC-062-21	Cap Screw 5/16 -18 x 3/4 Hex Washer Hd	3
33	NS-038-11	Lock Nut 5/16 -18 Hex	3
34	00-046229	Knife Reset Chain Assy	1
35	00-046231	Film Adjust Chain Assy. (Use with Curtain Assy.)	1
36	SC-117-91	Cap Screw 1/4-20 x 1 Hex Hd	3
37	WL-003-38	Lockwasher 1/4 Helical	3
38	NS-031-20	Nut 1/4-20 Hex	3
39	00-044327	Plate Assy. - Solenoid	1
40	00-086713	Collar - Steel (Incls. Item 41)	1
41	SC-047-95	Set Screw 5/16-18 x 1/4 Hex Hdls., Cup Pt	1
42	00-175659	Roller - Knife Chain Guide	1
43	00-175644	Shaft - Film Adjust Pivot	1
44	00-086674	Bearing	2
45	00-086713	Collar Assy. (Incls. Item 46)	1
46	SC-047-95	Set Screw 5/16-18 x 1/4 Hex Hdls., Cup Pt	1
47	SC-120-38	Cap Screw 5/16-18 x 1 Hex Hd	2
48	WL-003-47	Lockwasher 5/16 Helical	2
49	00-044323	Cover - Film Adjust	1
50	00-048502	Film Adjust Lever Assy. (Incls. Items 44, 60, & 61)	1
51	SC-114-04	Mach. Screw 1/4-20 x 1/2 Hex Washer Hd. (Mounts Item 50 to Item 30)	1
52	00-175653	Spacer - Film Adjustment Mounting	1
53	00-175651	Block - Pivot	1
54	SC-055-01	Set Screw 10-24 x 1/4 Hex Hdls., Cup Pt. (SST)	2

FILM LENGTH

ILLUS. PL-53167	PART NO.	NAME OF PART	AMT.
55	SC-062-21	Cap Screw 5/16-18 x 1 1/4 Hex Hd	2
56	WL-003-47	Lockwasher 5/16 Helical	2
57	NS-038-11	Lock Nut 5/16-18 Hex	2
58	SC-066-20	Mach. Screw 10-32 x 1/2 Phil. Truss Hd. (SST)	1
59	00-175826	Bumper - Knife	1
60	00-047818	Sprocket - Idler (15T)	1
61	RR-008-13	Retaining Ring	1

NOTES

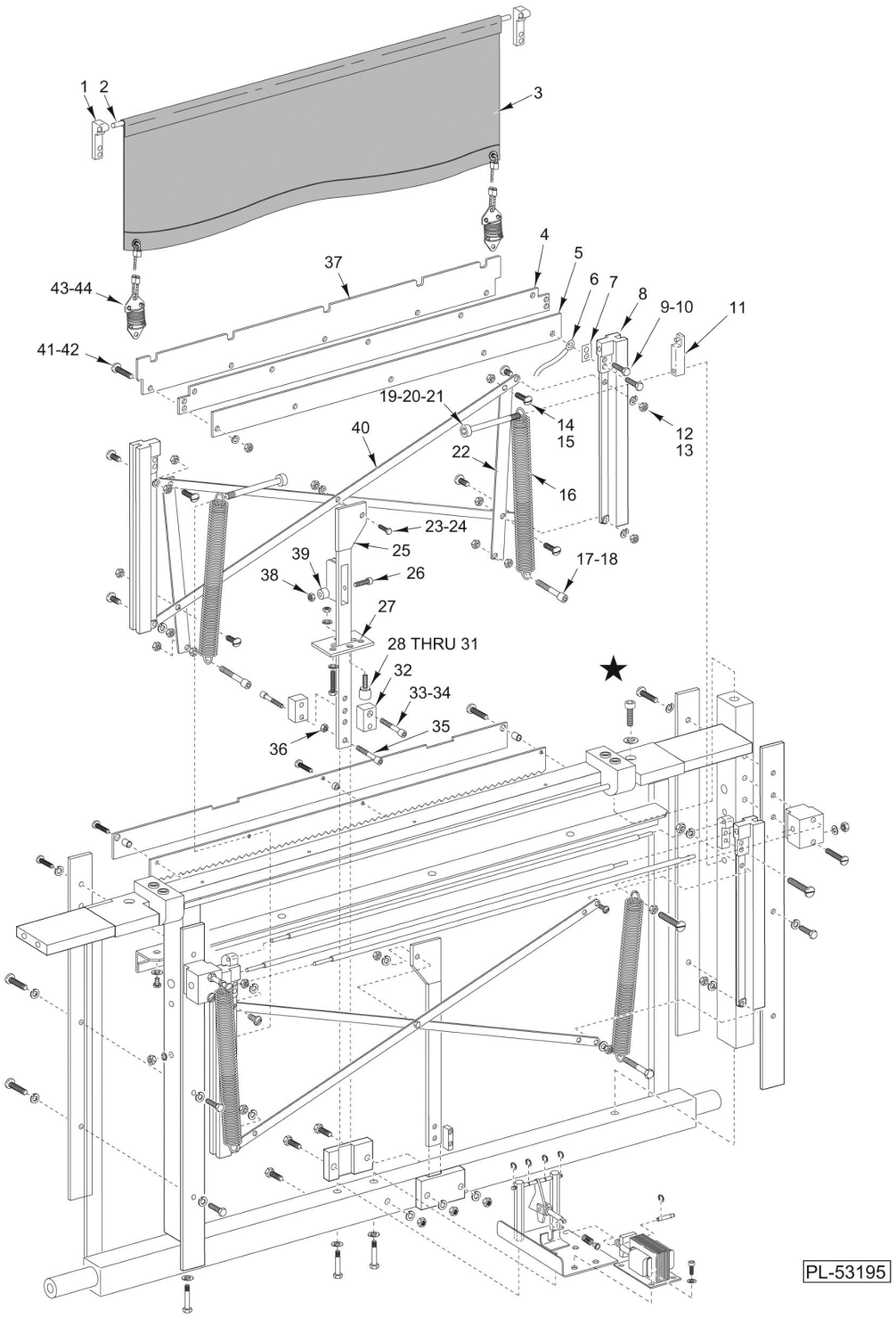

KNIFE AND PULLDOWN ASSEMBLY (UPPER SECTION)

KNIFE AND PULLDOWN ASSEMBLY (UPPER SECTION)

ILLUS. PL-53195	PART NO.	NAME OF PART	AMT.
1	00-044159	Bracket - Curtain	2
2	00-044232	Roller - Film Curtain	1
3	00-044243	Curtain & Spring Assy. (Incls. Springs, Cables, Etc.)	1
4	00-175864	Channel - Support	1
5	00-047848	Plate - Knife Channel	1
6	00-183458	Cable Assy. (Ground)	1
7	00-047849	Plate - Nut	2
8	00-175860	Slide - Knife & Pulldown	2
9	SC-067-09	Mach. Screw 10-32 x 5/8 Hex Hd	4
10	WL-013-11	Lockwasher #10 Internal Shakeproof	4
11	00-334750	Block - Spring Mounting	2
12	SC-014-64	Mach. Screw 1/4-20 x 5/8 Flat Hd	4
13	NS-047-86	Stop Nut 1/4 -20 Hex	4
14	00-331890	Screw - Nylok	4
15	NS-013-02	Nut 1/4 -20 Hex	4
16	00-334748	Spring - Knife Assy	2
17	SC-089-05	Cap Screw 1/4-20 x 11/4 Socket Hex Hd	2
18	NS-013-02	Nut 1/4-20 Hex	2
19	00-334758	Screw - Spring Mounting	2
20	NS-013-02	Nut 1/4-20 Hex	2
21	WL-003-38	Lockwasher 1/4 Helical	2
22	00-334749	Plate - Knife Spring Mounting	2
23	SC-118-19	Cap Screw 1/4-20 x 3/4 Hex Hd	2
24	NS-031-20	Stop Nut 1/4-20 Hex	2
25	00-048495	Bar Assy. - Knife	1
26	SC-086-01	Shoulder Screw 10-32 x 3/4 Hex Socket Hd	1
27	00-044157	Block - Bumper	2
28	00-175826	Bumper - Knife	3
29	SC-084-34	Cap Screw 1/4-20 x 3/4 Flat Hd	3
30	WS-022-10	Washer	3
31	NS-017-03	Jam Nut 1/4-20 Hex	3
32	00-048496	Block - Bumper	2
33	SC-089-04	Cap Screw 1/4-20 x 1 Hex Socket Hd	2
34	WL-003-38	Lockwasher 1/4 Helical	2
35	SC-089-05	Cap Screw 1/4-20 x 11/4 Hex Socket Hd	1
36	NS-031-20	Stop Nut 1/4-20 Hex	1
37	00-047847	Plate - Knife Channel	1
38	NS-009-22	Nut 10-24 Hex	1
39	00-044202	Roller - Knife Latch	1
40	00-175861	Brace - Cross	2
41	SC-123-74	Mach. Screw 8-32 x 5/8 Phil. Pan Hd. (SST)	5
42	WL-013-08	Lockwasher #8 Internal Shakeproof	5
43	00-044458	Spring - Curtain	2
44	00-049044	Hook - Curtain Spring	2
	00-048635	Bar Assy. - Knife Roller (Incls. Items 25, 26, 38, & 39)	1

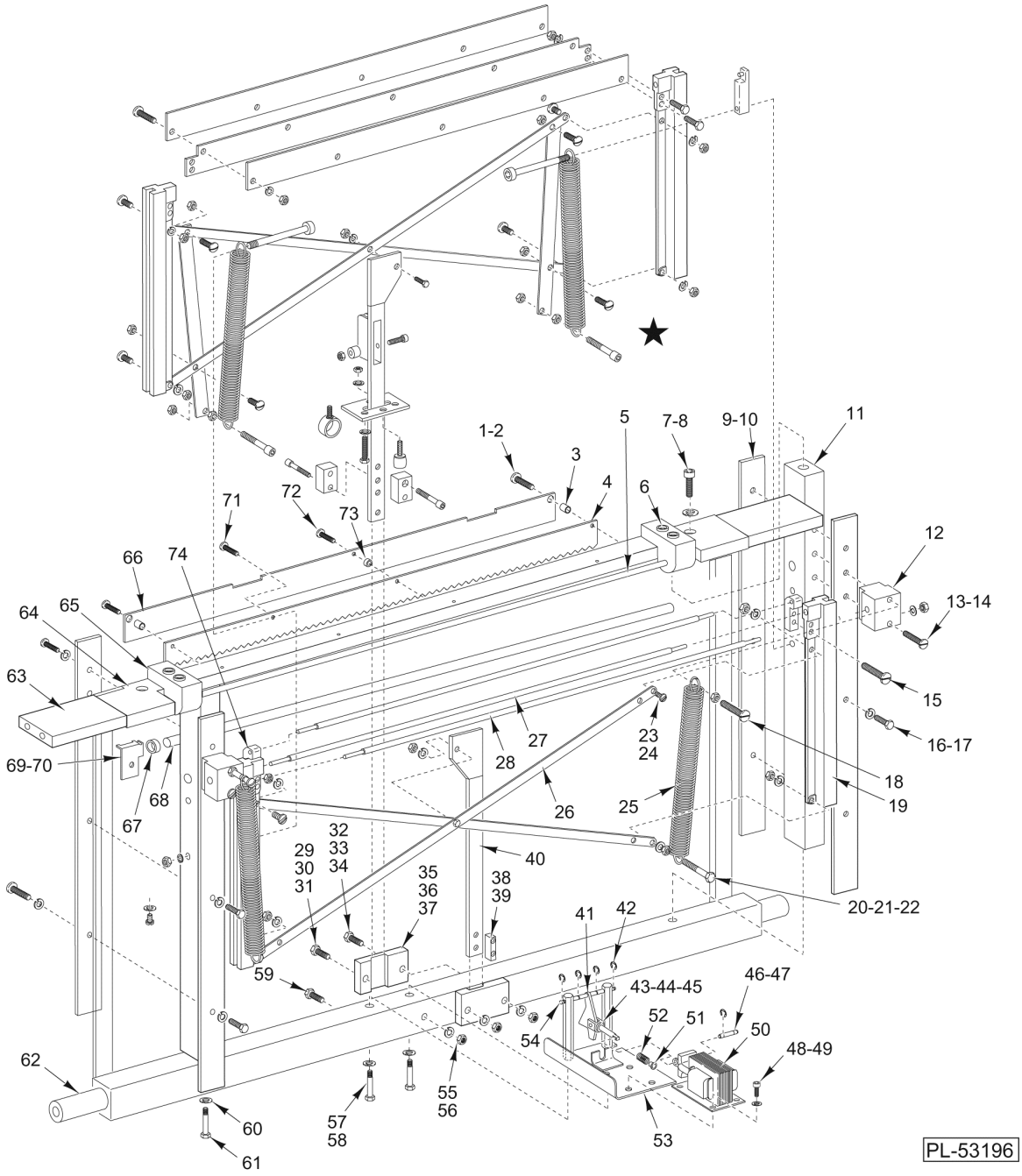

KNIFE AND PULLDOWN ASSEMBLY (LOWER SECTION)

KNIFE AND PULLDOWN ASSEMBLY (LOWER SECTION)

ILLUS. PL-53196	PART NO.	NAME OF PART	AMT.
1	SC-110-31	Mach. Screw 10-24 x 3/4 Hex Hd	2
2	WL-004-40	Lockwasher 10 Helical	2
3	00-440365	Spacer - Knife Guard	2
4	00-044169	Knife	1
5	00-044232	Roller - Film Curtain	1
6	SC-040-61	Cap Screw 8-32 x 3/8 Hex Socket Hd	4
7	SC-089-02	Cap Screw 1/4-20 x 3/4 Socket Fil. Hd	2
8	WL-003-38	Lockwasher 1/4 Helical	2
9	00-044044	Spacer - Knife Slide Bar	2
10	00-175837	Rail - Guide	4
11	00-184118	Slide Bar Mount Assy. (Incls. Sleeve Bearing)	2
12	00-175857	Block & Bearing Assy	2
13	SC-024-07	NLA - Obsolete--Mach. Screw 1/4-20 x 2 Phil. Pan Hd	2
14	NS-013-02	Nut 1/4 -20 Hex	2
15	SC-093-21	Mach. Screw 10-32 x 3/8 Pan Hd. (SST)	4
16	SC-110-12	Cap Screw 1/4-20 x 5/8 Hex Hd	4
17	WL-003-38	Lockwasher 1/4 Helical	4
18	SC-014-63	Mach. Screw 1/4-20 x 13/8 Flat Hd	2
19	00-175860	Slide - Knife & Pulldown	2
20	SC-118-17	Cap Screw 1/4-20 x 11/4 Hex Hd	2
21	WS-017-25	Washer	2
22	NS-047-86	Stop Nut 1/4-20 Hex	2
23	SC-014-64	Mach. Screw 1/4-20 x 5/8 Flat Hd	2
24	NS-047-86	Stop Nut 1/4-20 Hex	2
25	00-049043	Spring Assy. - Pull Down	2
26	00-175861	Brace - Cross	2
27	00-175855	Roller - Pull Bar	1
28	00-175835	Roller - Stationary	2
29	SC-112-88	Mach. Screw 1/4-20 x 21/4 Hex Hd	1
30	WL-003-38	Lockwasher 1/4 Helical	1
31	NS-031-20	Stop Nut 1/4-20 Hex	1
32	SC-118-15	Cap Screw 1/4-20 x 13/4 Hex Hd	1
33	WL-003-38	Lockwasher 1/4 Helical	1
34	NS-031-20	Stop Nut 1/4-20 Hex	1
35	00-175849	Guide - Pull Bar	2
36	00-175850	Spacer - Knife Bar	1
37	00-175851	Spacer - Pull Bar	1
38	00-044156	Block - Chain Connection	1
39	SC-100-08	Mach. Screw 1/4-20 x 3/8 Hex Washer Hd., Whiz-Loc	2
40	00-044168	Pulldown Bar Assy	1
41	00-044218	Knife Latch Assy	1
42	RR-009-09	Retaining Ring	4
43	00-047413	Link - Solenoid	1
44	00-044896	Pin - Knife Link	1
45	RR-006-10	Retaining Ring	2
46	00-442413	Pin - Knife Latch	1
47	RR-006-12	Retaining Ring	2
48	SC-040-01	Cap Screw 10-32 x 3/8 Hex Socket Hd	4
49	WL-004-40	Lockwasher 10 Helical	4
50	00-049328	Solenoid Assy. - Knife Latch (Includes Cable & Strain Relief)	1
51	00-044668	Bushing - Spring	1
52	00-044200	Spring - Latch Return	1
53	00-044211	Knife Solenoid Plate Assy	1
54	00-044214	Shaft - Latch	1
55	WL-003-38	Lockwasher 1/4 Helical	1

KNIFE AND PULLDOWN ASSEMBLY (LOWER SECTION)

ILLUS. PL-53196	PART NO.	NAME OF PART	AMT.
56	NS-031-20	Stop Nut 1/4-20 Hex	1
57	SC-118-15	Cap Screw 1/4-20 x 13/4 Hex Hd	2
58	WL-003-38	Lockwasher 1/4 Helical	2
*59	SC-118-15	Cap Screw 1/4-20 x 13/4 Hex Hd	1
60	WL-003-38	Lockwasher 1/4 Helical	2
61	SC-092-31	Cap Screw 1/4-20 x 11/2 Socket Fil. Hd	2
62	00-044179	Spacer - Knife Frame Lower	2
63	00-044178	Spacer - Knife Frame Top	2
64	00-044173	Knife Frame Assy	1
65	00-044158	Block - Roller Polymer	2
66	00-044167	Guard - Knife Rear	1
67	00-047967	Bearing	2
68	00-440521	Shaft - Knife Guard	1
69	00-440519	Bracket (RH)	1
70	00-440520	Bracket (LH)	1
71	SC-040-61	Cap Screw 8-32 x 3/8 Hex Socket Hd	4
72	SC-121-24	Mach. Screw 8-32 x 5/8 Flat Hd	1
73	00-440366	Spacer - Knife Center	1
74	00-044159	Bracket - Curtain	2
	00-046885	Latch Assy. - Knife (Includes Items 41 thru 54)	1

* Bolt Head This Side Only.

NOTES

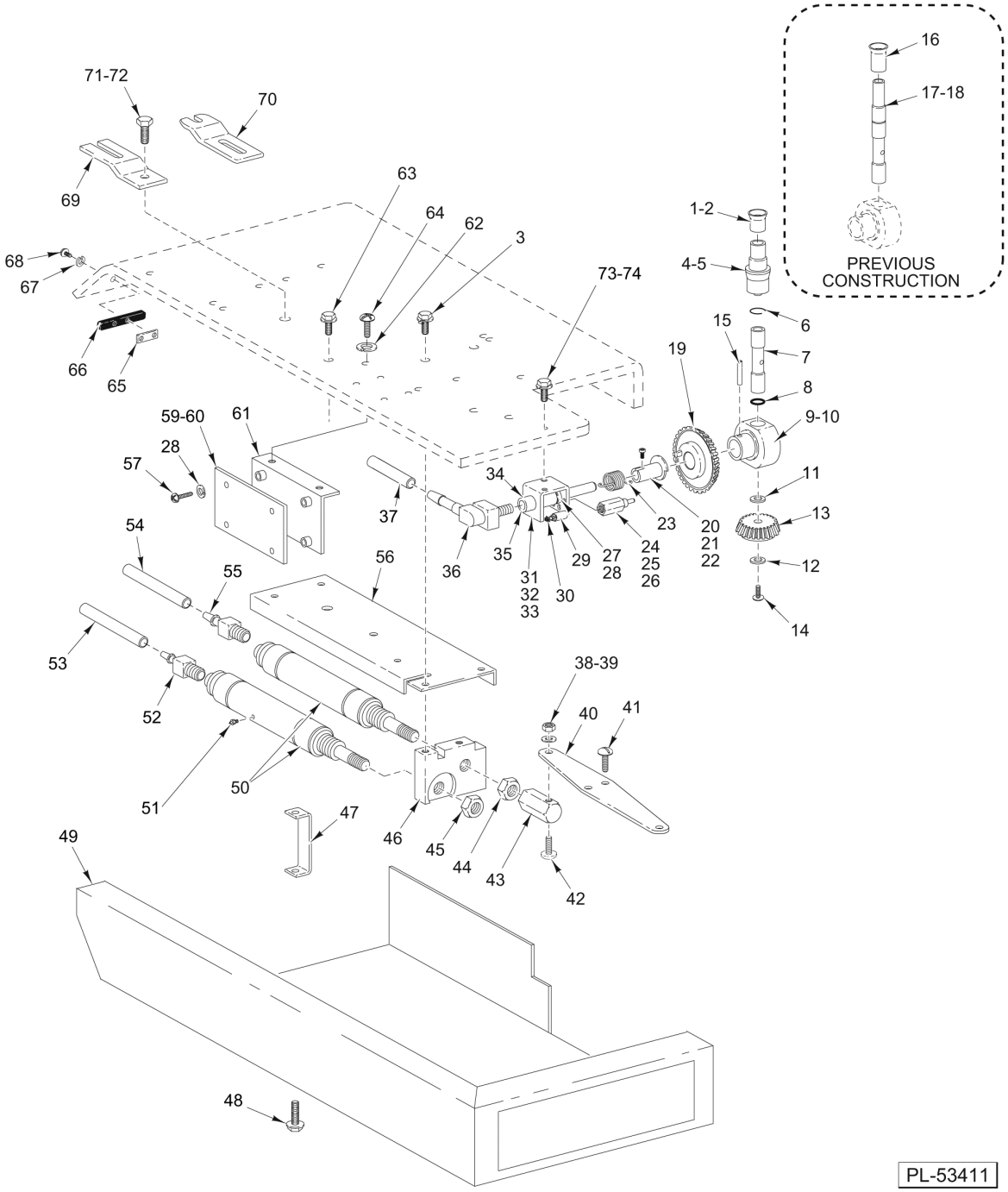

WAND ASSEMBLY
(ML-44173, ML-44174, ML-44202, & ML-44203)

WAND ASSEMBLY
(ML-44173, ML-44174, ML-44202, & ML-44203)

ILLUS. PL-53411	PART NO.	NAME OF PART	AMT.
1	00-441537	Wand Tip - Flared	1
2	00-443494	Cup - Short Wand (Access Printer)	1
3	SC-123-92	Mach. Screw 1/4-20 x 5/8 Hex Washer Hd. Whiz-Lock	2
4	00-441525	Wand Assy. - Pop-up (Incls. Item 1)	1
5	00-443583	Sleeve - Bearing (Used With Item 2)	1
6	RR-004-05	Retaining Ring	1
7	00-441496	Tube Assy. - Swing (Incls. Items 6 & 8)	1
8	00-441580-00002	O-Ring	1
9	00-042504	Bearing - Tube	1
10	00-042508	Shaft - Wand	1
11	WS-030-58	Washer 0.500 x 0.750 x 0.010 (SST)	AR
12	WS-017-32	Washer	AR
13	00-041681	Pinion	1
14	SC-053-15	Mach. Screw 5/16-18 x 1/2 Slotted Truss Hd. (SST)	1
15	PS-005-15	Spiral Pin 1/8 Dia. x 5/8 Lg	1
16	00-042592	Cap - Vacuum Tube (Large) (Previous Construction)	1
17	00-041856	Tube - Swing (Previous Construction)	1
18	RR-011-05	Retaining Ring (Previous Construction)	1
19	00-041680	Gear	1
20	00-041694	Sleeve - Spring	1
21	SC-120-37	Cap Screw 6-32 x 3/8 Hex Socket Hd	1
22	WL-008-01	Lockwasher #6 Internal Shakeproof	1
23	00-041713	Spring - Ring Gear	1
24	00-041857	Housing - Plunger	3
25	00-042684	Spring - Plunger	3
26	00-042942	Pin - Plunger	3
27	00-042755	Bearing - Tube	1
28	00-042753	Drum - Belt	1
29	00-042556	Solenoid/Connector Assy	3
30	00-042859	Bumper - Rubber	3
31	00-041854	Bracket - Arm Pivot	1
32	RR-011-08	Retaining Ring	3
33	00-043033	Spacer - Solenoid	1
34	00-441579	Bearing - Tube End	1
35	00-441580-00001	O-Ring	1
36	00-041719	Fitting - Elbow	1
37	00-042544-00003	Tubing - Vinyl (78") (White)	1
38	WS-023-22	Washer (SST)	2
39	NS-031-07	Stop Nut 8-32 Hex	2
40	00-042842	Belt - Wand Drive	1
41	SC-018-29	Mach. Screw 6-32 x 3/8 Phil. Pan Hd	2
42	SC-018-37	Mach. Screw 8-32 x 3/4 Phil. Pan Hd	2
43	00-042752	Nut - Belt Drive	2
44	NS-018-10	Jam Nut 5/16-24 Hex	2
45	NS-017-41	Jam Nut 5/8-18 Hex	1
46	00-048091	Block - Cylinder Mounting	1
47	00-042760	Spacer - Cover	1
48	SC-123-92	Mach. Screw 1/4-20 x 5/8 Hex Washer Hd., Whiz-Lock	1
49	00-043915-00001	Cover Assy. - Printer Plate	1
50	00-044351	Cylinder - Air	2
51	00-442965	Valve - Adjustable	1
52	00-048031	Fitting - Barb (1/16 I.D. Hose)	1
53	00-048032-00001	Tubing - Vinyl (70") (Clear)	1
54	00-042541-00005	Tubing - Vinyl (70") (Clear)	1
55	00-041720	Fitting - Straight 1/4"	1

WAND ASSEMBLY
(ML-44173, ML-44174, ML-44202, & ML-44203)

ILLUS. PL-53411	PART NO.	NAME OF PART	AMT.
56	00-041842	Plate - Support	1
57	SC-018-31	Mach. Screw 8-32 x 3/8 Phil. Pan Hd	4
58	WL-008-07	Lockwasher 8 Internal Shakeproof	4
59	00-042306	Board Assy. - Solenoid Drive	1
60	00-046989	Harnais - Solenoid Driver	1
61	00-442784	Bracket - Solenoid Drive Board	1
62	WL-008-07	Lockwasher 8 Internal Shakeproof	2
63	SC-123-92	Mach. Screw 1/4-20 x 5/8 Hex Washer Hd., Whiz-Lock	1
64	SC-018-31	Mach. Screw 8-32 x 3/8 Phil. Pan Hd	2
65	00-042521	Plate - Nut	2
66	00-043829-00001	Sensor - Photo Transistor Assy. (Receiver)	2
67	WL-003-09	Lockwasher #6 Helical	4
68	SC-119-51	Mach. Screw 6-32 x 1 Slotted Pan Hd. (SST)	4
69	00-041752	Retainer	2
70	00-447955	Retainer - Foot (Access Printer)	2
71	SC-123-92	Mach. Screw 1/4-20 x 5/8 Hex Washer Hd., Whiz-Lock	2
72	NS-038-04	Lock Nut 1/4 -20 Hex	2
73	SC-123-92	Mach. Screw 1/4-20 x 5/8 Hex Washer Hd. Whiz-Lock	2
74	NS-038-04	Lock Nut 1/4-20 Hex	2
	00-042558-00001	Conduit	AR
	00-442994	Kit - Needle Valve	1
	00-044336	Collar - Ground Foot	1

NOTES

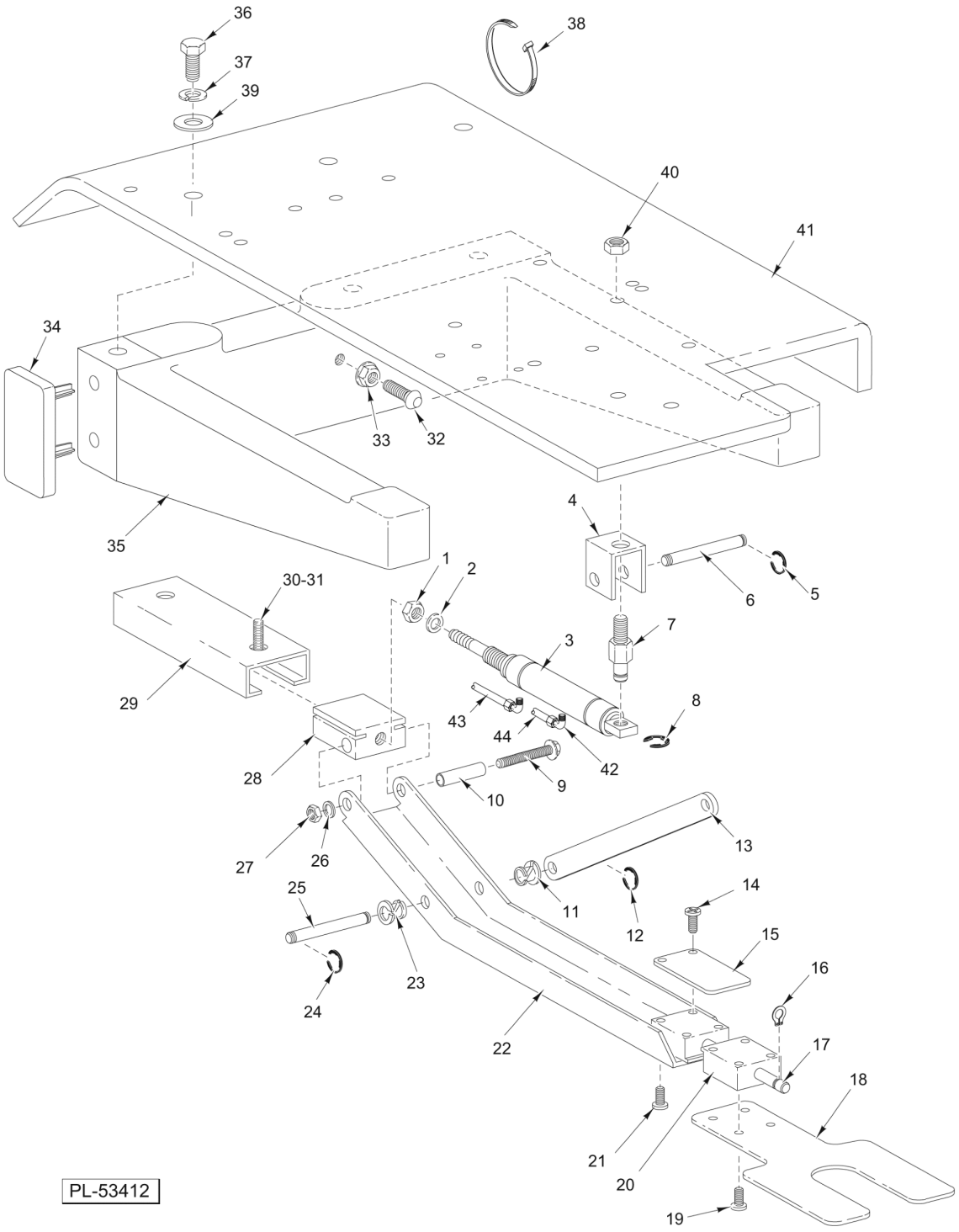

ARM AND HAND UNIT
(ML-44173, ML-44174, ML-44202, & ML-44203)

ARM AND HAND UNIT
(ML-44173, ML-44174, ML-44202, & ML-44203)

ILLUS. PL-53412	PART NO.	NAME OF PART	AMT.
1	NS-017-60	Jam Nut 1/4-28 Hex	1
2	00-440756	Washer - Rubber	1
3	00-044349	Cylinder - Air	1
4	00-041848	Bracket - Arm Pivot	1
5	RR-011-04	Retaining Ring	2
6	00-041850	Pin - Upper Pivot	2
7	00-443767	Pivot - Cylinder	1
8	RR-011-04	Retaining Ring	1
9	SC-081-44	Mach. Screw 10-32 x 11/2 Rd. Hd	1
10	00-041853	Spacer - Arm Pivot	1
11	00-175560	Bushing - Nyliner	2
12	RR-011-04	Retaining Ring	1
13	00-049971	Pivot - Bar Slide	2
14	SD-007-13	Self-Tapping Screw 6-20 x 1/4 Phil. Pan Hd., Type B	2
15	00-042120	Spring - Applier	1
16	RR-011-04	Retaining Ring	2
17	00-042114	Pin - Applier	1
18	00-042074	Label Applier	1
19	SD-007-13	Self-Tapping Screw 6-20 x 1/4 Phil. Pan Hd., Type B	4
20	00-042076	Block - Pin	2
21	SD-007-13	Self-Tapping Screw 6-20 x 1/4 Phil. Pan Hd., Type B	4
22	00-042073	Arm - Label Applier	1
23	00-175560	Bushing - Nyliner	2
24	RR-011-04	Retaining Ring	1
25	00-041850	Pin - Upper Pivot	1
26	WL-007-12	Lockwasher 10 External Shakeproof	2
27	NS-009-30	Nut 10-32 Hex	1
28	00-048092	Block - Slide	1
29	00-041845	Support - Slide	1
30	SC-123-92	Mach. Screw 1/4-20 x 5/8 Hex Washer Hd., Whiz-Lock	2
31	NS-038-04	Lock Nut 1/4 -20 Hex	2
32	00-443742	Bumper - Cylinder Stop	1
33	NS-038-04	Lock Nut 1/4 -20 Hex	1
34	00-440086	Plug	1
35	00-048299	Support - Printer Plate	1
36	SC-117-92	Cap Screw 5/16-18 x 3/4 Hex Hd	3
37	WL-003-47	Lockwasher 5/16 Helical	3
38	00-255502	Tie - Cable Locking	1
39	WS-017-16	Washer	3
40	NS-038-04	Lock Nut 1/4 -20 Hex	1
41	00-048550	Plate - Printer	1
42	00-041719	Fitting - Elbow	2
43	00-042543-00007	Tubing - Vinyl (82") (Red)	1
44	00-042542-00005	Tubing - Vinyl (82") (Blue)	1
	00-042441	Arm & Hand Assy	1

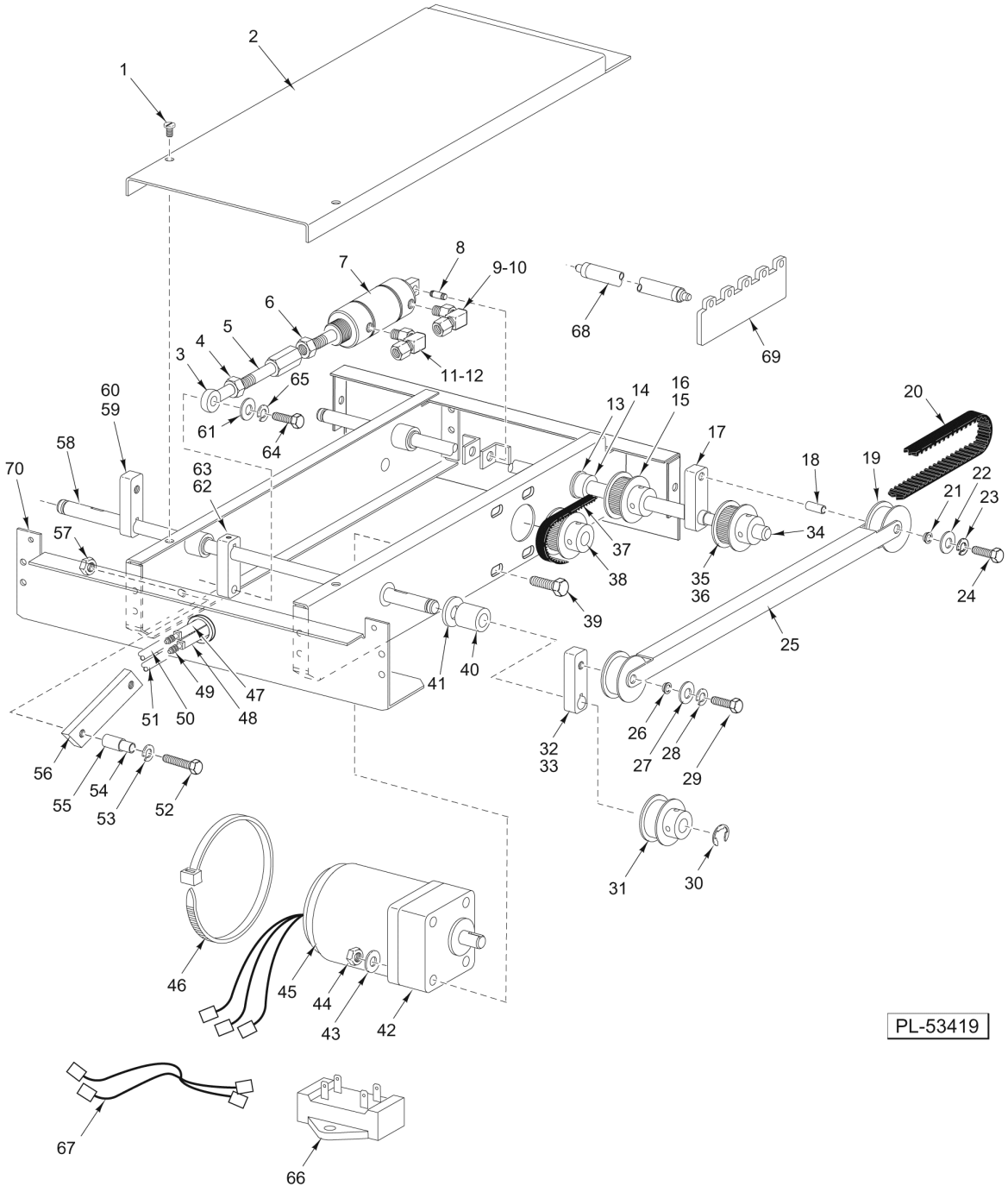

DRIVE AND ROLLER UNIT
(ML-44173, ML-44174, ML-44202, & ML-44203)

DRIVE AND ROLLER UNIT
(ML-44173, ML-44174, ML-44202, & ML-44203)

ILLUS. PL-53419	PART NO.	NAME OF PART	AMT.
1	SC-053-05	Mach. Screw 10-24 x 3/8 Slotted Truss Hd	2
2	00-047897	Cover - Motor	1
3	00-084741	Rod - End (Female)	1
4	NS-013-08	Nut 1/4-28 Hex (LH Thread)	1
5	00-047888	Link - Cylinder Adjuster	1
6	NS-018-10	Jam Nut 5/16-24 Hex	1
7	00-047966	Cylinder	1
8	00-440173-00001	Pin - Clevis	1
9	00-041719	Fitting - Elbow	2
10	00-042543-00005	Tubing - Vinyl (36") (Red)	1
11	00-041719	Fitting - Elbow	2
12	00-042542-00001	Tubing - Vinyl (13") (Blue)	1
13	00-047965	Washer - Thrust	3
14	00-047979	Spacer - Rear Shaft	1
15	00-047887	Pulley - Timing 3mm HTD Pitch	2
16	SC-122-35	Set Screw 8-32 x 1/4 Hdls. Cup Pt	4
17	00-047882	Pivot - Roller Drive Rear	2
18	00-047949	Spacer - Pulley	4
19	00-047948	Pulley - Idler Timing Belt	2
20	00-047947	Belt - Timing (188T)	2
21	00-047967	Bearing - Nyliner 3/8 Dia	8
22	WS-017-25	Washer	8
23	WL-003-38	Lockwasher 1/4 Helical	8
24	SC-118-15	Cap Screw 1/4 -20 x 13/4 Hex Hd	4
25	00-047941	Support - Roller Drive Belt	2
26	00-047967	Bearing - Nyliner 3/8 Dia	8
27	WS-017-25	Washer	8
28	WL-003-38	Lockwasher 1/4 Helical	8
29	SC-118-15	Cap Screw 1/4 -20 x 13/4 Hex Hd	4
30	RR-004-05	Retaining Ring	2
31	00-047944	Pulley Assy. - Front Shaft	2
32	00-047881	Pivot - Roller Drive Front	2
33	KW-003-03	Key - Woodruff 1/8 x 1/2 Lg	1
34	00-047942	Shaft - Rear	1
35	00-047887	Pulley - Timing 3mm HTD Pitch	1
36	SC-122-35	Set Screw 8-32 x 1/4 Hdls. Cup Pt	2
37	00-048043	Belt - Timing (Motor)	1
38	00-047889	Pulley - Timing 3mm HTD Pitch	1
39	SC-122-43	Cap Screw 10-24 x 2 Hex Hd	4
40	00-047943	Spacer - Front Shaft	1
41	00-047965	Washer - Thrust	2
42	00-440498	Gearhead	1
43	WS-023-20	Washer	4
44	NS-038-13	Nut - Lock 10-24 Hex Special	4
45	00-048237	Motor Assy. (Incls. Item 66)	1
46	00-046918	Tie - Cable	1
47	00-042543-00005	Tubing - Vinyl (15") (Red)	1
48	00-042542-00001	Tubing - Vinyl (13") (Blue)	1
49	00-048101	Fitting - Barbed Connector	2
50	00-042543-00006	Tubing - Vinyl (58")(Red)	1
51	00-042542-00004	Tubing - Vinyl (57")(Blue)	1
52	SC-118-98	Cap Screw 1/4 -20 x 2 Hex Hd	2
53	WL-003-38	Lockwasher 1/4 Helical	2
54	00-047921	Spacer - Cylinder Stop	2
55	00-047922	Tubing - Damper	2

DRIVE AND ROLLER UNIT
(ML-44173, ML-44174, ML-44202, & ML-44203)

ILLUS. PL-53419	PART NO.	NAME OF PART	AMT.
56	00-047923	Plate - Cylinder Stop	1
57	NS-038-04	Nut - Lock Special 1/4 -20	2
58	00-047940	Shaft - Front	1
59	00-047881	Pivot - Roller Drive Front	2
60	KW-003-03	Key - Woodruff 1/8 x 1/2 Lg	1
61	WS-017-25	Washer	1
62	00-047885	Actuator - Roller Position	1
63	KW-003-03	Key - Woodruff 1/8 x 1/2 Lg	1
64	SC-117-91	Cap Screw 1/4 -20 x 1 Hex Hd	1
65	WL-003-38	Lockwasher 1/4 Helical	1
66	00-XXXXX	Capacitor (Included With Item 45)	1
67	00-046983	Cable Assy	1
68	00-047970	Roller Assy	5
69	00-441043	Support - Roller	2
70	00-047856	Frame Assy. - Roller Drive	1

NOTES

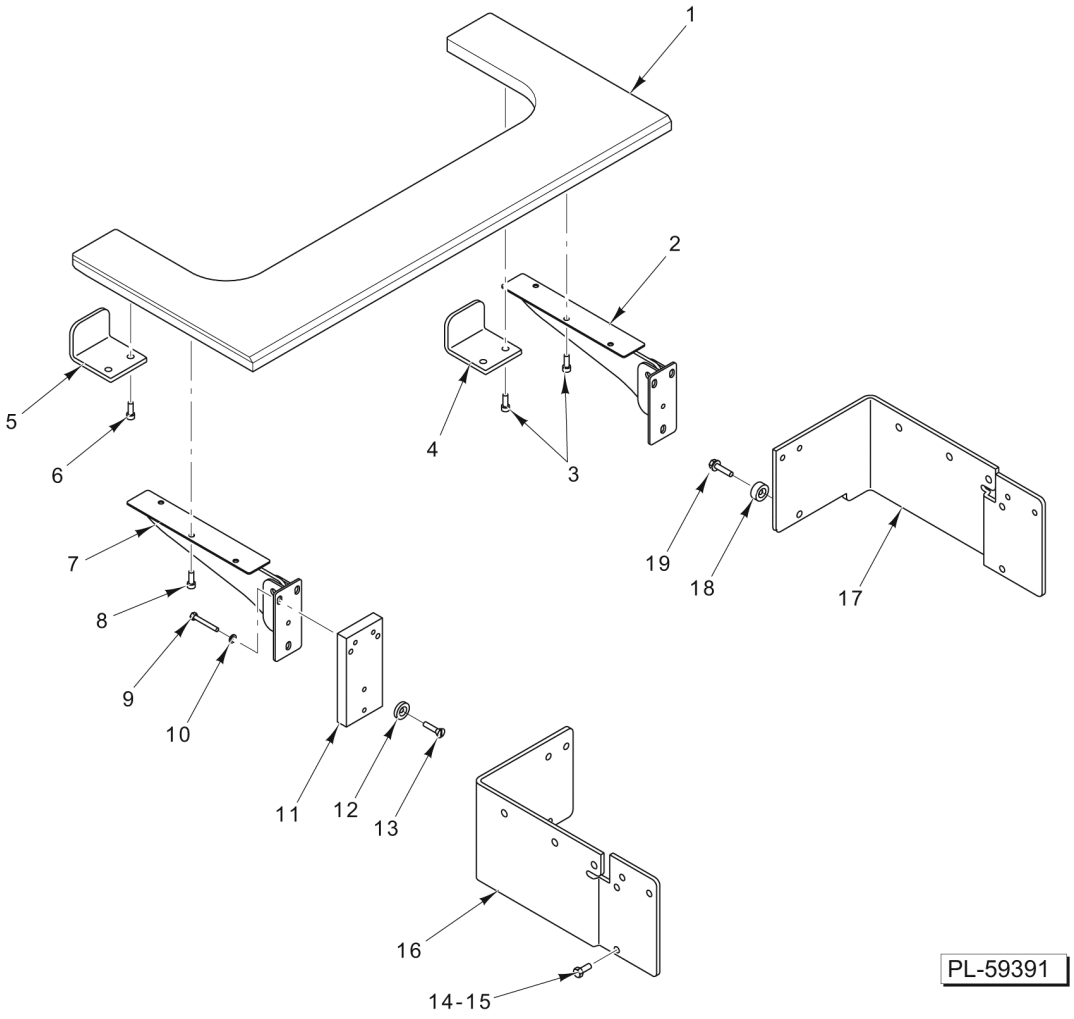

FRONT SHELF KIT (OPTIONAL)

FRONT SHELF KIT (OPTIONAL)

ILLUS. PL-59391	PART NO.	NAME OF PART	AMT.
1	00-047009	Shelf - Platter Assy. (Incls. Items 2 thru 8)	1
2	00-184132	Hinge - Shelf	1
3	SC-039-14	Cap Screw 5/16-18 x 1 Slotted Flat Hd	5
4	00-047014	Guard - Shelf Edge	1
5	00-047014	Guard - Shelf Edge	1
6	SC-039-14	Cap Screw 5/16-18 x 1 Slotted Flat Hd	2
7	00-184132	Hinge - Shelf	1
8	SC-039-14	Cap Screw 5/16-18 x 1 Slotted Flat Hd	3
9	SC-124-51	Cap Screw 10-24 x 21/4 Hex Socket Hd	4
10	WS-019-06	Washer	6
11	00-047003	Block - Hinge Mounting	2
12	00-184135	Spacer - Hinge Block	2
13	SC-022-19	Mach. Screw 10-24 x 1/2 Slotted Flat Hd. (SST)	2
14	SC-067-07	Mach. Screw 10-24 x 1/2 Hex Hd. (SST)	3
15	WL-006-07	Lockwasher #10 Helical	4
16	00-047844	Bracket (RH)	1
17	00-047843	Bracket (LH)	1
18	00-047004	Pad - Support Assy	2
19	SC-123-92	Mach. Screw 1/4 -20 x 5/8 Hex Washer Hd	2
	00-047005	Kit - Front Shelf (Incls. Items 1 thru 15)	1
	SC-075-42	Set Screw 10-32 x 1/4 Hex Hdls., Cup Pt. (Included With Item 7)	2

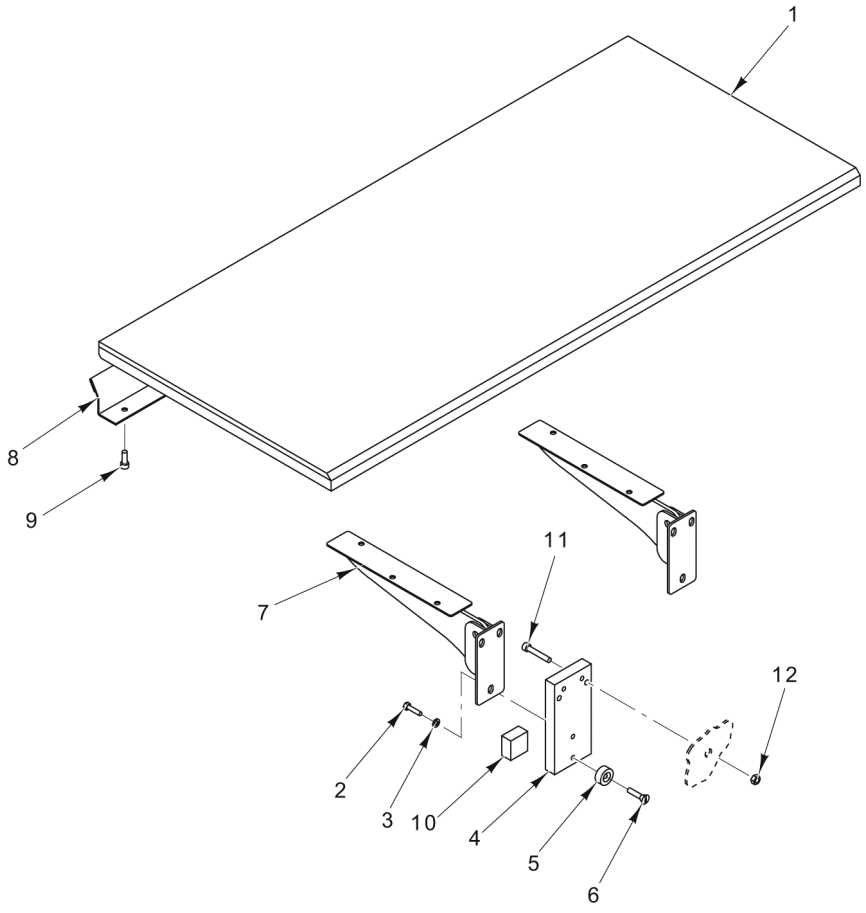

SIDE SHELF KIT (OPTIONAL)

SIDE SHELF KIT (OPTIONAL)

ILLUS. PL-59392	PART NO.	NAME OF PART	AMT.
1	00-440960	Shelf - Platter Assy. (Incls. Items 7, 8, & 9)	1
2	SC-067-07	Mach. Screw 10-24 x 1/2 Hex Hd. (SST)	6
3	WS-019-06	Washer	6
4	00-184134	Block - Hinge Mounting	2
5	00-184135	Spacer - Hinge Block	2
6	SC-022-19	Mach. Screw 10-24 x 1/2 Slotted Flat Hd. (SST)	2
7	00-184132	Hinge - Shelf	2
8	00-440728	Guard - Shelf Edge	1
9	SD-039-14	Self-Tapping Screw 10-16 x 1/2 Hex Washer Hd., Type AB	11
10	00-334738	Pad - Support Assy	2
11	SC-124-51	Cap Screw 10-24 x 21/4 Hex Socket Hd	4
12	NS-038-13	Lock Nut 10-24 Hex	4
	00-184138	Kit - Side Shelf (Incls. Items 1 thru 12)	1
	SC-075-42	Set Screw 10-32 x 1/4 Hex Hdls., Cup Pt. (Included With Item 7)	2

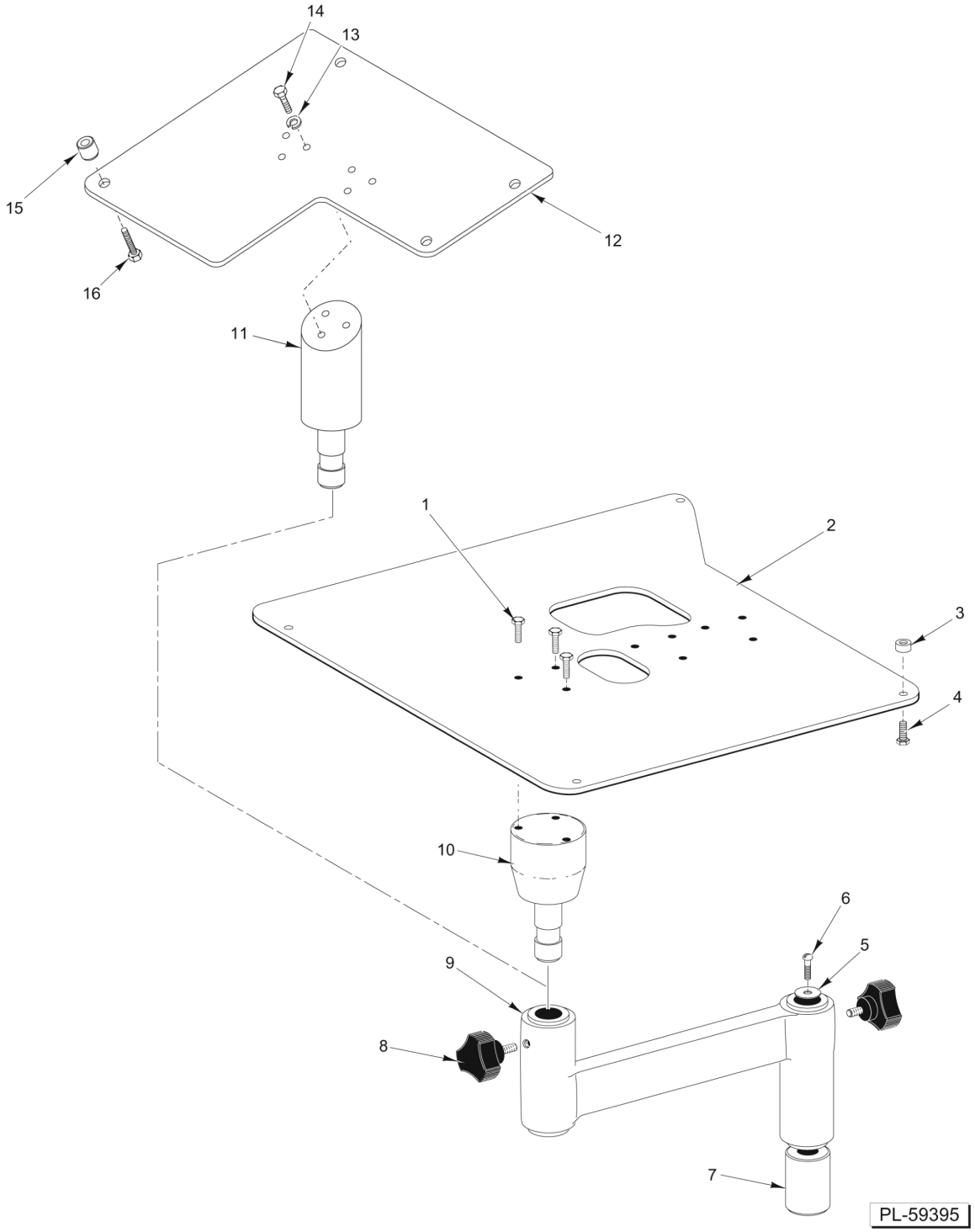

PRINTER SUPPORT
(ML-44193 & ML-44198)

PRINTER SUPPORT
(ML-44193 & ML-44198)

ILLUS. PL-59395	PART NO.	NAME OF PART	AMT.
1	SC-123-92	Mach. Screw 1/4-20 x 5/8 Hex Washer Hd. (ML-44193)	3
2	00-044821	Plate - Printer Mount (ML-44193)	1
3	00-333750	Spacer - Printer (ML-44193)	4
4	SC-121-62	Mach. Screw 1/4-20 x 1 Hex Washer Hd. (ML-44193)	4
5	00-049346	Shield - Post Bearing	1
6	SC-053-41	Mach. Screw 1/4-20 x 1/2 Slotted Truss Hd. (SST)	1
7	00-048269	Spacer - Pivot Arm	1
8	00-183538	Knob - Film Centering	2
9	00-043420	Arm Assy. - Printer Pivot	1
10	00-044829	Stud Assy. - Printer Pivot (ML-44193)	1
11	00-042570	Pivot Assy. - Printer (ML-44198)	1
12	00-042571	Plate - Printer Mount (ML-44198)	1
13	WL-008-13	Lockwasher #10 Internal (ML-44198)	3
14	SC-068-33	Mach. Screw 10-32 x 1/2 Hex Hd. (ML-44198)	3
15	00-333750	Spacer - Printer (ML-44198)	4
16	SC-121-62	Mach. Screw 1/4-20 x 1 Hex Washer Hd. (ML-44198)	4

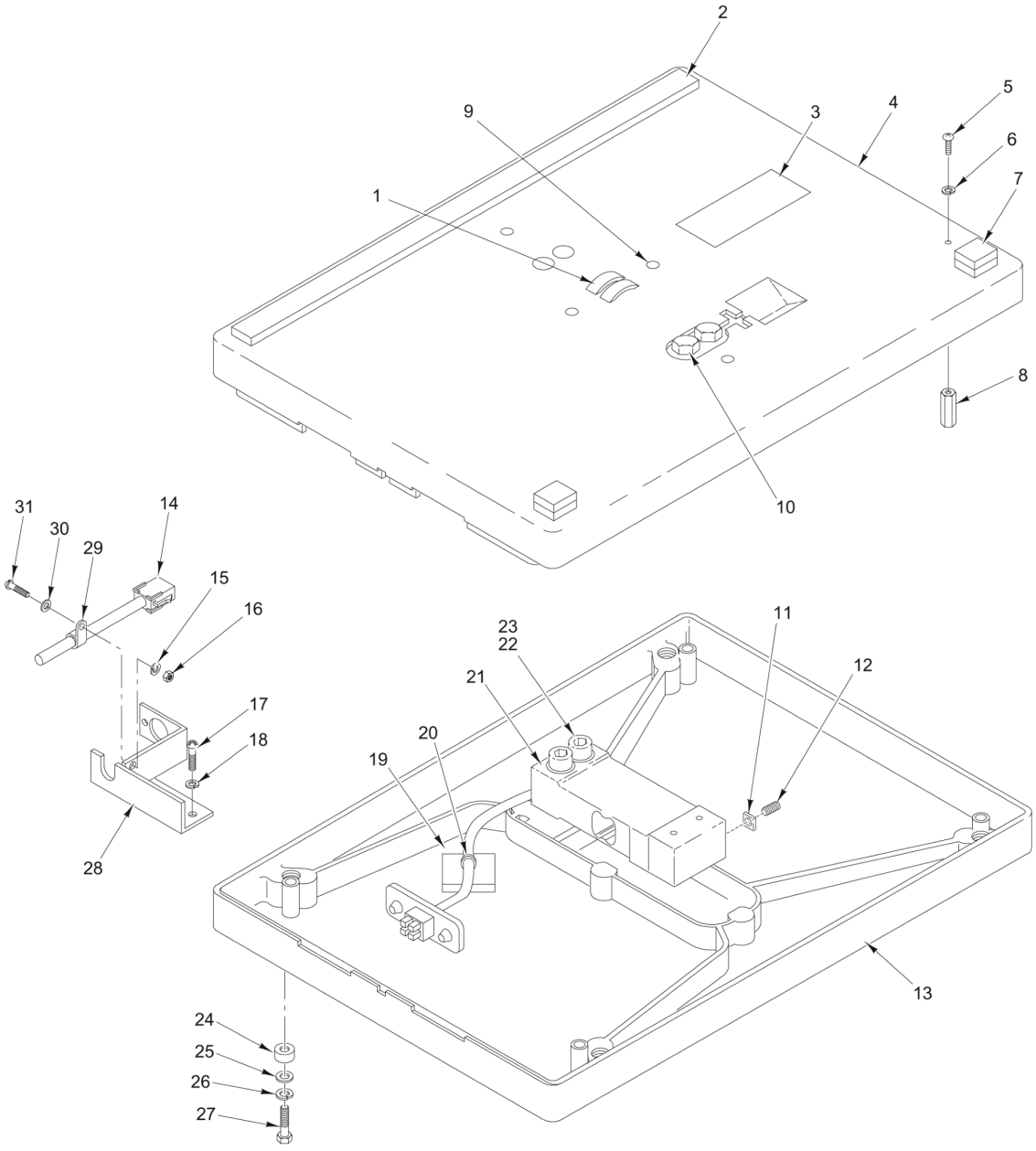

SCALE UNIT (ML-44193)

SCALE UNIT (ML-44193)

ILLUS. PL-59394	PART NO.	NAME OF PART	AMT.
1	00-259515	Contact - Finger 6" - 16 Pcs	2
2	00-183947	Pad - Platter (121/2 In.)	1
3	00-442984	Label - Capacity	1
4	00-041908	Support - Platter	1
5	SC-113-08	Mach. Screw 10-32 x 1/2 Phil. Pan Hd	4
6	WL-004-40	Lockwasher #10 Helical	4
7	00-259185	Pad - Platter	8
8	00-441780	Stop - Loadcell	4
9	SC-123-20	Set Screw 10-32 x 3/8 Hex Hdls	4
10	SC-110-12	Cap Screw 1/4-20 x 5/8 Hex Hd	2
11	NS-046-58	Nut 10-32 Square	1
12	SC-123-20	Set Screw 10-32 x 3/8 Hex Hdls	2
13	00-041909	Base Assy	1
14	00-441656	Cable - Scale	1
15	WL-003-12	Lockwasher #8 Helical	1
16	NS-009-12	Nut 8-32 Hex	1
17	SC-018-31	Mach. Screw 8-32 x 3/8 Phil. Pan Hd	2
18	WL-003-12	Lockwasher #8 Helical	2
19	00-255503	Mount - Cable Tie	1
20	00-251199	Tie - Cable (4 In. Lg.)	1
21	00-044899	Load Cell Assy. (30 kg)	1
22	SC-120-70	Cap Screw 1/4-20 x 15/8 Hex Socket Hd	2
23	WL-003-39	Lockwasher 1/4 Light	2
24	00-441128	Spacer - Scale Mount	4
25	WS-019-10	Washer (SST)	4
26	WL-004-40	Lockwasher #10 Helical	4
27	SC-067-09	Mach. Screw 10-32 x 5/8 Hex Hd	4
28	00-441657	Clamp - Cable	1
29	00-253363	Clamp	1
30	WS-019-41	Washer (SST)	1
31	SC-018-34	Mach. Screw 8-32 x 1/2 Phil. Pan Hd	1

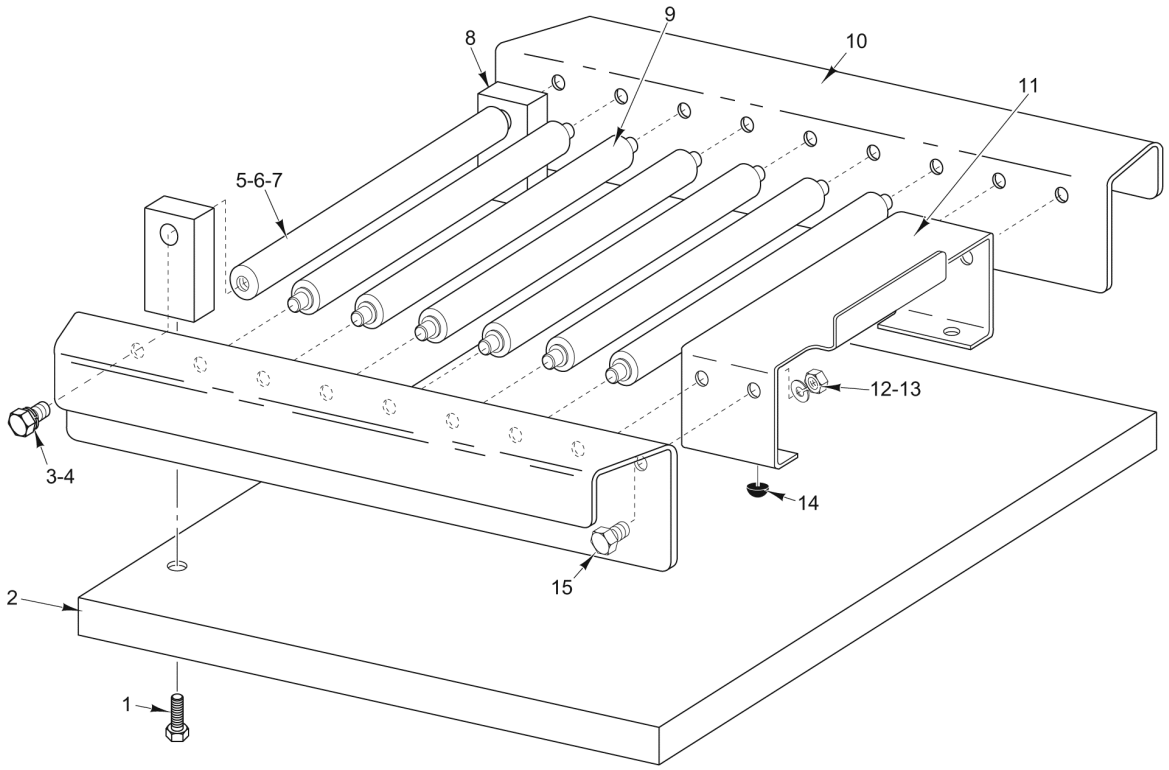

PL-59393

PLATFORM ASSEMBLY
(ML-44193 & ML-44198)

PLATFORM ASSEMBLY
(ML-44193 & ML-44198)

ILLUS. PL-59393	PART NO.	NAME OF PART	AMT.
1	SC-022-32	Mach. Screw 1/4-20 x 1/2 Slotted Flat Hd. (SST)	2
2	00-183704	Platter	1
3	SC-118-20	Cap Screw 1/4-20 x 1/2 Hex Hd	2
4	WL-003-38	Lockwasher 1/4 Helical	2
5	00-175927	Tube - Roller	1
6	00-175925	Shaft - Platform	1
7	00-175924	Bushing	2
8	00-175923	Pivot - Platform Support	2
9	00-445040	Roller Assy	6
10	00-175926	Frame - Platform	2
11	00-175928	Bracket - Platform Stop	1
12	NS-013-02	Nut 1/4-20 Hex	4
13	WL-003-38	Lockwasher 1/4 Helical	4
14	00-254206	Bumper	2
15	SC-118-20	Cap Screw 1/4-20 x 1/2 Hex Hd	4
	00-183915	Platform Assy. (Incls. Items 3 thru 15)	1
	00-442775	Cover - Conveyor Support (ML-44198)	1

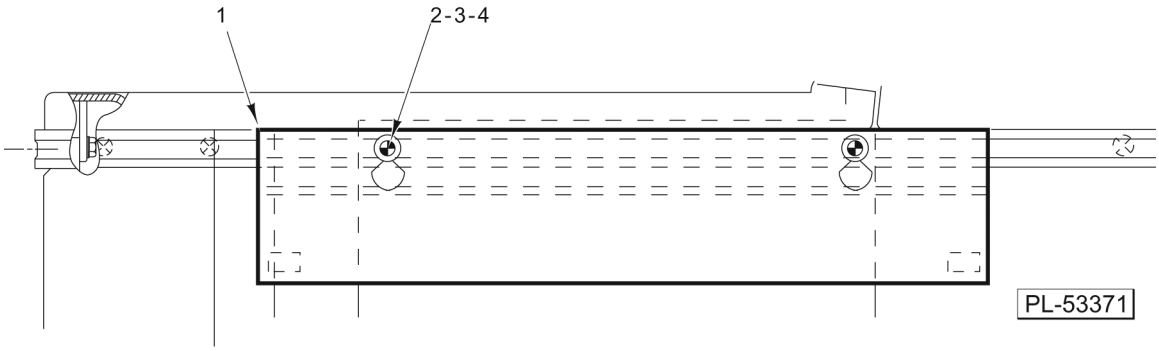

SUPPLY HOLDER (OPTIONAL)

SUPPLY HOLDER (OPTIONAL)

ILLUS. PL-53371	PART NO.	NAME OF PART	AMT.
1	00-047367	Holder Assy. - Supplies	1
2	00-047567	Retainer - Holder	2
3	SC-018-74	Mach. Screw 10-24 x 3 Phil. Pan Hd	2
4	NS-048-07	Lock Nut 10-24 Hex	2
	00-184350	Pad - Gripper	2

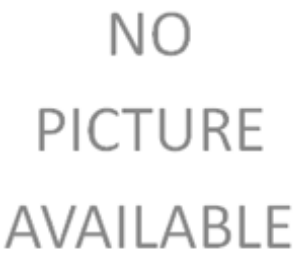

MISCELLANEOUS

use when no PL illustration is needed or available

MISCELLANEOUS

ILLUS. PL-BLANK	PART NO.	NAME OF PART	AMT.
1	00-180029-00025	Lubrication & Container (Lubriplate FP-150L) (4 Oz.)	1
2	00-520228	Adhesive (Loctite 242)	1
3	00-542689	Tape - Plastic (3M #471 Red Vinyl) (36 Yard Roll)	1
4	00-333591	Card - Water Shield Instructions	1
5	00-441613	Shield - Water (Packaged)	1
6	00-522815	Adhesive (Loctite 271)	1
7	00-557540	Cleaner (Blue Shower II) (8 Oz.)	1
8	00-102714	Brush (Cleaning)	1
9	00-102973-00009	Lubricant (Duoprime Oil 90) (4 Oz.)	1
10	00-519504	Lubricant - Special (Thermo Joint Compound) (Size 250) (2 Oz.)	1
11	00-520478-00002	Lubricant - Grease (14 Oz. Cartridge)	1
12	00-544003	Lubricant - Oil (Mobil SAE 20 Non-Detergent) (32 Oz.)	1
13	00-180029	Lubricant FP-150L (32oz)	1
14	00-102973-00029	Lubricant (Duoprime Oil 90) 16 Oz	1
15	00-102973-00060	Lubricant (Duoprime Oil 90) 128 Oz	1
16	00-102973-00084	Lubricant (Mobil HD 80W-90) 16 Oz. (Gearbox)	1
17	00-042070-00003	Cable Assy (8 Ft.) CPU2 to CPU1, Secondary Printer to Primary Printer	1
18	00-042070-00011	Cable Assy (6 Ft.) CPU2 to Printer	1
19	00-042070-00012	Cable Assy (12 Ft.) Weigher to Printer	1
20	00-042070-00013	Cable Assy (10 Ft.) CPU1 to Console	1
21	00-048547	Cable - Power UWS to Secondary CLA	1
22	00-043848	Cable - Communication CPU2 to Secondary CLA	1
23	00-334776	Pin Extraction Tool, Amp 305183	1