HOBART

CATALOG OF REPLACEMENT PARTS



SCALE PRINTER

MODELS

SP-600	**ML-28945**
SP-600P	**ML-28946**
SP-600S	**ML-28967**

A product of HOBART CORPORATION 701 S. RIDGE AVENUE TROY, OHIO 45374-0001

FORM 33944 (2-98)

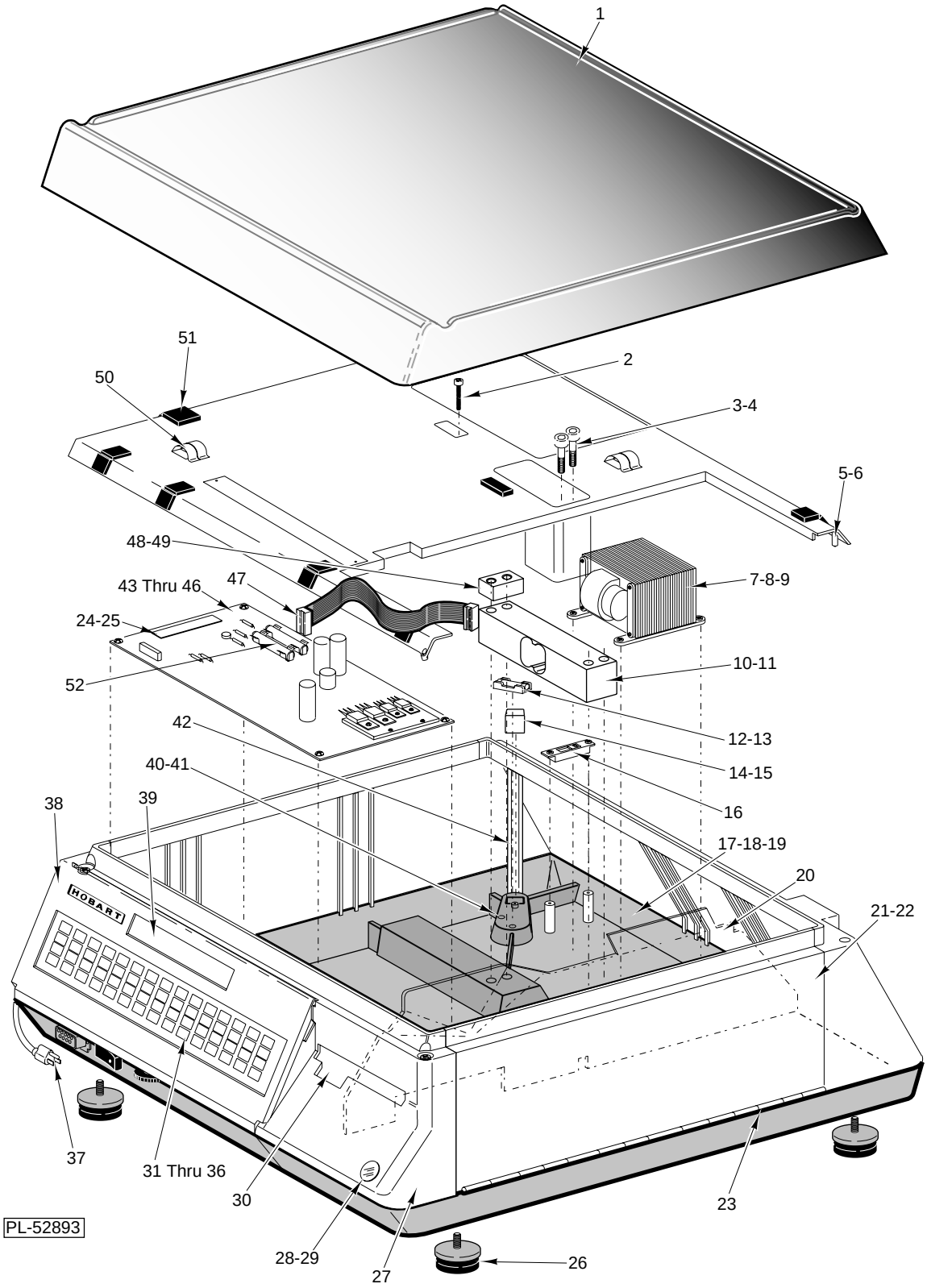

HOUSING ASSEMBLY SP-600

© HOBART CORPORATION, 1998

HOUSING ASSEMBLY SP-600

ILLUS. PL-52893	PART NO.	NAME OF PART	AMT.
1	00-184370	Cover - Platter	1
2	SC-121-10	Mach. Screw ¼-28 x 2 Phil. Fil. Hd.	1
3	SC-040-11	Cap Screw ¼-20 x 2 Socket Hex Hd.	2
4	WL-006-16	Lockwasher ¼ Light	2
5	00-048387	Support - Platter Assembly	1
6	SC-088-51	Set Screw 10-32 x ⅜ Hdls. Half Dog Pt.	4
7	00-046594	Transformer 120/240 V	1
8	SD-015-40	Self-Tapping Screw 8-32 x ⅜ Phil Pan Hd., Type T	4
9	WL-007-07	Lockwasher 8 External Shakeproof	1
10	00-047054	Load Cell (15 KG)	1
11	00-259169	Screw - Overload Stop	1
12	00-046576	Fuseholder	1
13	FE-022-29	Fuse 250V. - 1 Amp.	1
14	00-258120	Filter - Power Input	1
15	SD-015-38	Self-Tapping Screw 6-32 x ⅜ Phil Pan Hd., Type T	1
16	00-046559	Switch	1
17	00-046414	Base	1
18	00-259412	Clamp - Cable	2
19	SD-015-40	Self-Tapping Screw 8-32 x ⅜ Phil Pan Hd., Type T	2
20	00-259161	Partition	1
21	00-042531	Door - Printer Access	1
22	00-042707	Magnet	1
23	00-042530	Hinge	1
24	00-042356	Ram Board (512K PS Ram)	1
25	00-042358	Board Assy. (2 MB PSRAM)	1
26	00-259167	Foot	4
27	00-046424	Cover Assembly	1
28	00-047015	Plug - Transparent	1
29	00-043112	Level	1
30	00-044671	Tear Bar Assembly	1
31	00-259688	Retainer - Overlay	1
32	00-184266	Overlay - Keyboard	1
33	00-046419	Keyboard	1
34	00-042715	Spacer	3
35	NS-009-02	Mach. Nut 4-40 Hex	3
36	WL-003-03	Lockwasher 4 Medium	3
37	00-334654	Cord - Power Supply (Angled Plug)	1
38	00-046420	Bezel Assembly	1
39	00-046217	Display - Alpha Numeric	1
40	SD-015-40	Self-Tapping Screw 8-32 x ⅜ Phil Pan Hd., Type T	2
41	WL-007-07	Lockwasher 8 External Shakeproof	2
42	00-252222	Post - Cabinet	4
43	00-046853	Board - Processor	1
44	00-259170	Insulator - Mylar	1
45	00-252289	Plug-2 Position	AR
46	SD-015-40	Self-Tapping Screw 8-32 x ⅜ Phil Pan Hd., Type T	1
47	00-047250	Cable - Display	1
48	00-183874	Block - Stop	1
49	SC-040-11	Cap Screw ¼-20 x 2 Socket Hex Hd.	2
50	00-259515	Contact - Finger (16 Pieces)	2
51	00-259185	Pad - Platter	8
52	00-046550	Battery (Nicad)	2
	00-535236	Sealer	AR
	00-526582	Sealer	AR
	00-541890	Sealer	AR
	00-520228	Adhesive - Loctite 242	AR
	00-512987	Adhesive - Loctite 222	AR
	00-519504	Thermo Joint Compound (2 oz.)	AR
	00-532280	Primer - Adhesive	AR
	00-042714	Stud - Press	1
	00-184983	Cable Assy. - Interconnections (Incldes. Bracket Assy.)	1
	00-183896	Inspection Plate (Incldes. screws & lockwashers)	1
	00-183358	Kit - Fish Pan & Arms	1

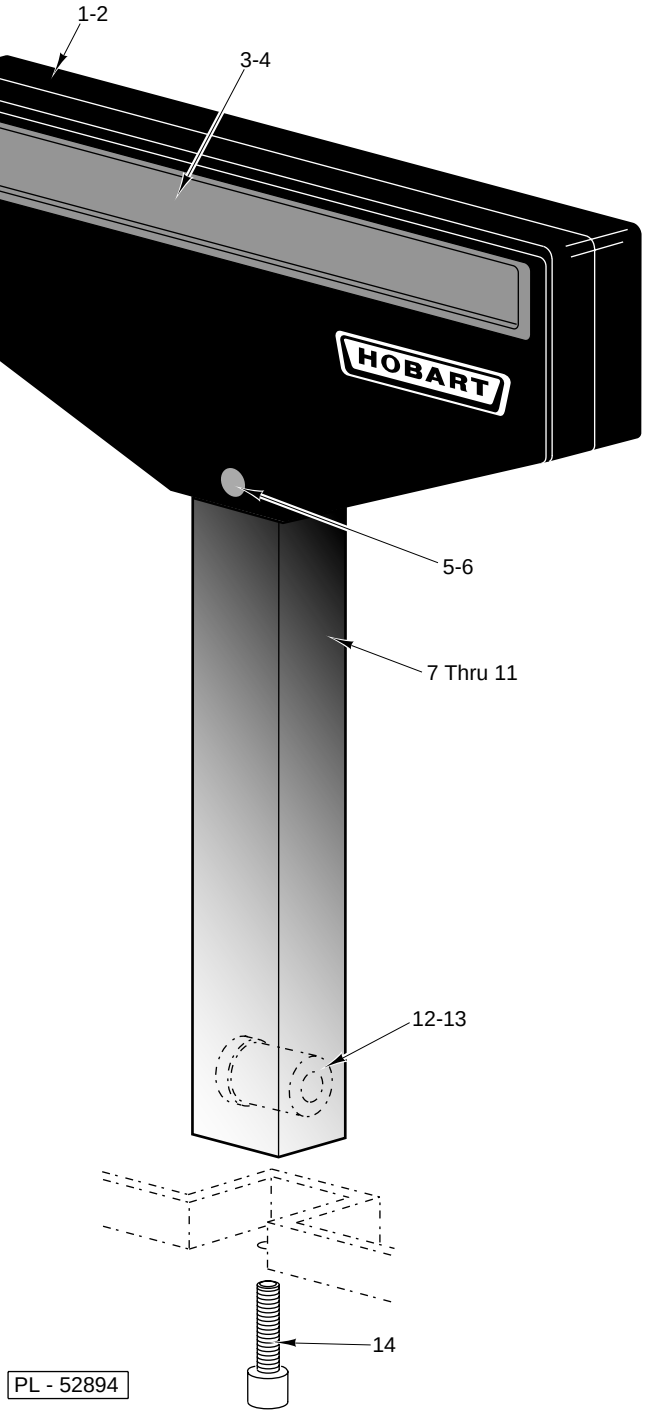

DISPLAY ASSEMBLY SP-600

DISPLAY ASSEMBLY SP-600

ILLUS. PL-52894	PART NO.	NAME OF PART	AMT.
1	00-046669	Display Assy. (Inclds. items 2 thru 6)	1
2	00-046425	Cover - Display	2
3	00-046561	Board Assy. VF Display	1
4	SD-032-03	Self - Tapping Screw 6-19 x ⅜ Phil. Pan Hd.	4
5	00-046454	Cover - Screw	2
6	SC-018-30	Mach. Screw 8-32 x ¼ Phil Pan Hd.	2
7	00-259232	Post - Display (8")	1
8	00-259437	Post - Display (14")	1
9	00-259484	Insulator - Post (13.360")(Use with item 8)	1
10	00-259454	Insulator - Post (7.360")(Use with item 7)	1
11	00-047250	Cable - Display	1
12	00-047333	Bar-Draw Down	1
13	SC-115-35	Mach. Screw 8-32 x ½ Flat Hd.	2
14	SC-089-04	Cap Screw ¼-20 x 1 Soc. Hex Hd.	1

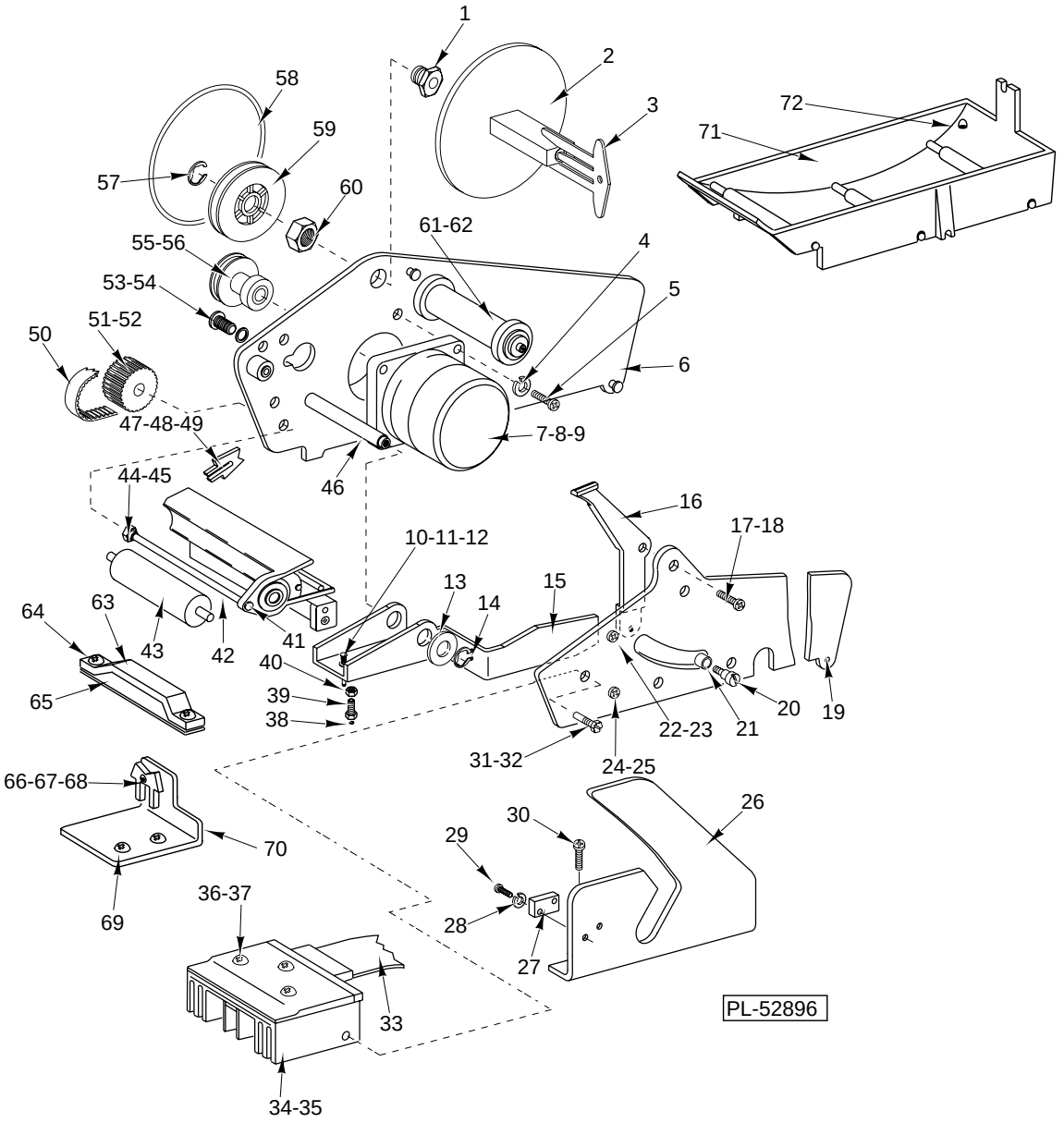

PRINTER ASSEMBLY SP-600

ILLUS. PL-52896	PART NO.	NAME OF PART	AMT.
1	00-334998	Hub Assy.	1
2	00-184462	Take - Up Shaft Assembly	1
3	00-259197	Key - Label Roll	1
4	WL-003-12	Lockwasher 8 Medium	3
5	SC-018-34	Mach. Screw 8-32 x ½ Phil Pan Hd.	3
6	00-184480	Left Side Frame Assembly (Incldes. Stud & Bearing)	1
7	00-259000-00001	Stepper Motor Assembly (Incldes. item 9)	1
8	00-183946	Wrapping - Spiral Band	1
9	00-259204	Plate - Motor Screw	1
10	00-175157	Plunger	1

PRINTER ASSEMBLY SP-600

ILLUS. PL-52896	PART NO.	NAME OF PART	AMT.
11	00-175167	Spring - Compression	1
12	WS-023-21	Washer	1
13	00-259606	Washer	2
14	RR-007-10	Retaining Ring	2
15	00-042828	Bar - Head Spring	1
16	00-175518	Lever - Head Latch	1
17	SC-018-31	Mach. Screw 8-32 x ⅜ Phil. Pan Hd.	1
18	WL-003-12	Lockwasher 8 Medium	1
19	00-042567	Right Frame Assembly (Incldes. Stud)	1
20	00-259213	Screw - Shoulder Latch	1
21	00-259263	Bearing	1
22	SC-018-31	Mach. Screw 8-32 x ⅜ Phil. Pan Hd.	3
23	WL-003-12	Lockwasher 8 Medium	3
24	SC-018-31	Mach. Screw 8-32 x ⅜ Phil. Pan Hd.	2
25	WL-003-12	Lockwasher 8 Medium	2
26	00-259171	Plate - Latch	1
27	00-259144-00001	Head Up Switch Assy.	1
28	WL-019-65	Lockwasher 3 Medium	2
29	SC-119-17	Mach. Screw 3-48 x ⅜ Pan Hd.	2
30	SD-015-40	Self-Tapping Screw 8-32 x ⅜ Phil Pan Hd., Type T	2
31	00-259265	Screw - Dowel	2
32	WL-003-12	Lockwasher 8 Medium	2
33	00-259148	Cable - Print Head	1
34	00-047074	Print Head - Thermal	1
35	00-259605	Heatsink	1
36	SC-119-16	Mach. Screw M3 x 6mm Pan Hd.	3
37	WL-019-58	Lockwasher Internal Shakeproof	3
38	RR-006-13	Retaining Ring	1
39	00-259261	Screw - Adjustment	1
40	NS-018-39	Jam Nut ¼-28 Hex	1
41	00-184514	Support Assembly	1
42	00-259236	Bar - Peel	1
43	00-259207	Roller - Drive (Ground)	1
44	00-259201	Screw - Peel Bar	1
45	WL-003-12	Lockwasher 8 Medium	1
46	00-259211	Pivot - Spring Bar	1
47	00-184279	Media Sensor Assembly	1
48	SC-113-10	Mach. Screw 4-40 x ⅜ Phil. Pan Hd.	1
49	WS-029-24	Washer	1
50	00-259198	Belt - Timing	1
51	00-259632	Pulley - Drive Roller	1
52	SC-047-74	Set Screw 8-32 x ¼ Headless Cup Pt.	1
53	SC-018-31	Mach. Screw 8-32 x ⅜ Phil. Pan Hd.	2
54	WL-003-12	Lockwasher 8 Medium	2
55	00-259205	Timing Pulley Assy.	1
56	SC-075-22	Set Screw 5-40 x ¼ Hdls. Cup Pt.	1
57	RR-010-06	Retaining Ring	1
58	00-183381	Belt - Take-up Drive	1
59	00-259817	Take-Up Pulley Assy.	1
60	00-184458	Nut - Special	1
61	00-183676	Spacer - Printer Frame	1
62	00-259192	Guide - Paper	1
63	00-259176	Bar - Cable Hold Down	1
64	SD-015-40	Self-Tapping Screw 8-32 x ⅜ Phil Pan Hd., Type T	2
65	00-259603	Bar - Hold Down	1
66	00-047368	Sensor - Label Taken	1
67	WL-003-03	Lockwasher 4 Medium	1
68	SC-120-27	Mach. Screw 4-40 x 7/16 Phil Rd. Hd.	1
69	SD-015-40	Self-Tapping Screw 8-32 x ⅜ Phil Pan Hd., Type T	2
70	00-259178	Bracket - Label Taken Sensor	1
71	00-259175	Paper Roll Holder Assy.	1
72	SD-015-40	Self-Tapping Screw 8-32 x ⅜ Phil Pan Hd., Type T	2
	00-512987	Loctite (Use with item 40)	AR
	00-519504-00004	Lubricant - Thermal Joint	AR

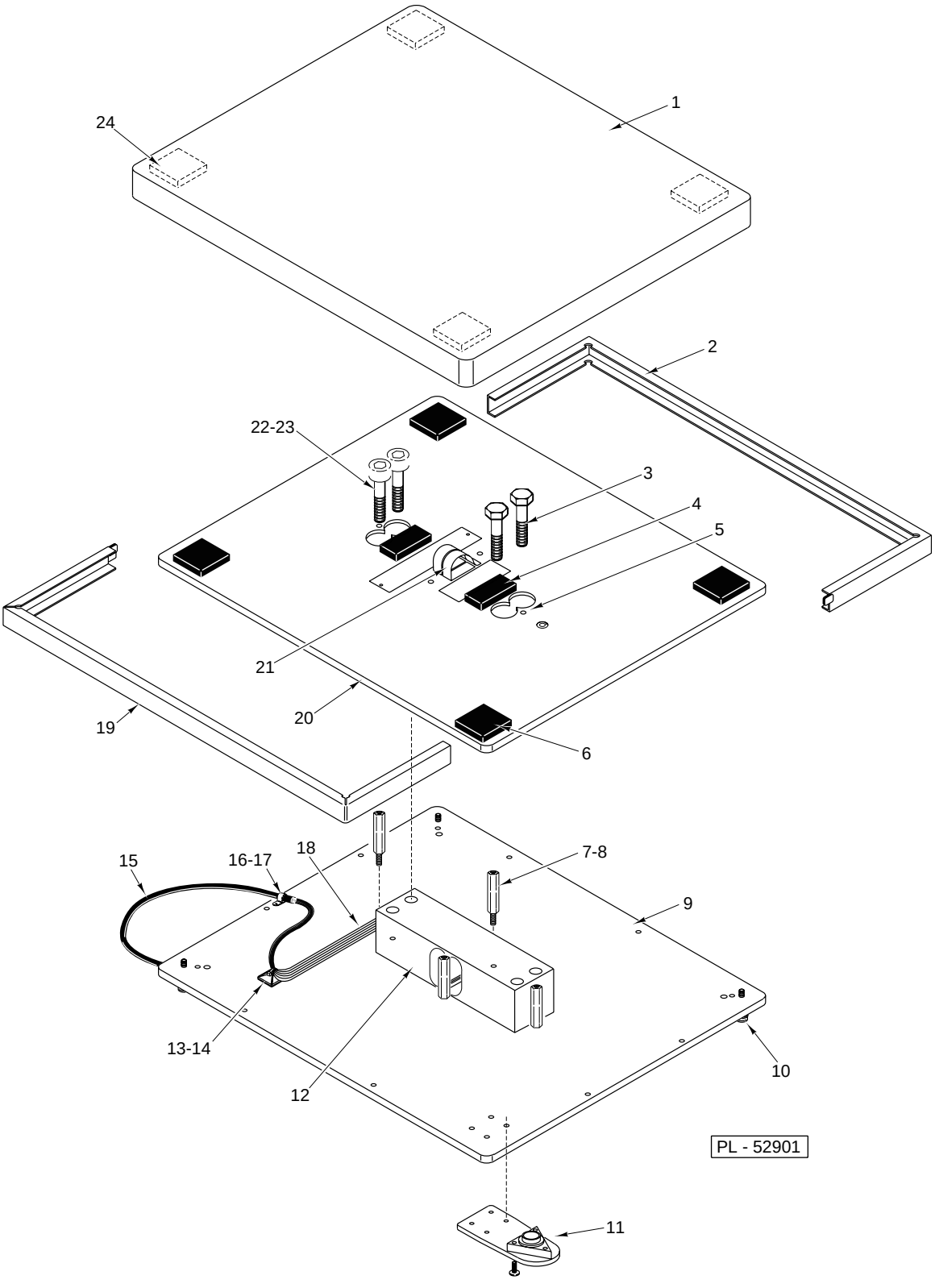

SP-600S SCALE

SP-600S SCALE

ILLUS. PL-52901	PART NO.	NAME OF PART	AMT.
1	00-259979	Platter	1
2	00-183360	Cover Assy. - Right (Inclds. Cover, Clip & Tab)	1
3	SC-110-12	Cap Screw ¼-20 x ⅝ Hex Hd.	2
4	00-259185	Pad - Platter	8
5	SC-088-51	Set Screw 10-32 x ⅜ Hdls. Half Dog Pt.	3
6	00-258958	Fastener - Dual Lock (Scotchmate Type 170)	4
7	00-183923	Post - Stop	4
8	SC-088-51	Set Screw 10-32 x ⅜ Hdls. Half Dog Pt.	4
9	00-048319	Base - Scale	1
10	SD-015-39	Self-Tapping Screw 8-32 x ¼ Phil Pan Hd., Type T	AR
11	00-047382	Level Assy. (Inclds. Level, Flange & Mtg. Plate)	1
12	00-047054	Load Cell (15 KG)	1
13	00-251199	Tie - Cable (4" Long)	1
14	00-255503	Mount - Cable Tie	1
15	00-334654	Cord - Power Supply (Angled Plug)	1
16	00-253363	Clamp	1
17	SD-015-30	Self Tapping Screw 8-32 x 5/16 Phil Pan Hd., Type TT	3
18	00-183634	Cable - Scale	1
19	00-183359	Cover Assy. - Left (Inclds. Clip & Tab)	1
20	00-047278	Support - Platter	1
21	00-259515	Contact - Finger (16 Pieces)	AR
22	SC-120-70	Cap Screw ¼-20 x 1⅝ Soc. Hd.	2
23	WL-003-39	Lockwasher ¼ Light	2
24	00-258959	Fastener - Dual Lock (Scotchmate Type 400)	4
	NS-017-03	Jam Nut ¼-20 Hex	4
	00-259167	Foot	4
	00-520228	Adhesive - Loctite 242	AR
	00-526034	Solvent	AR

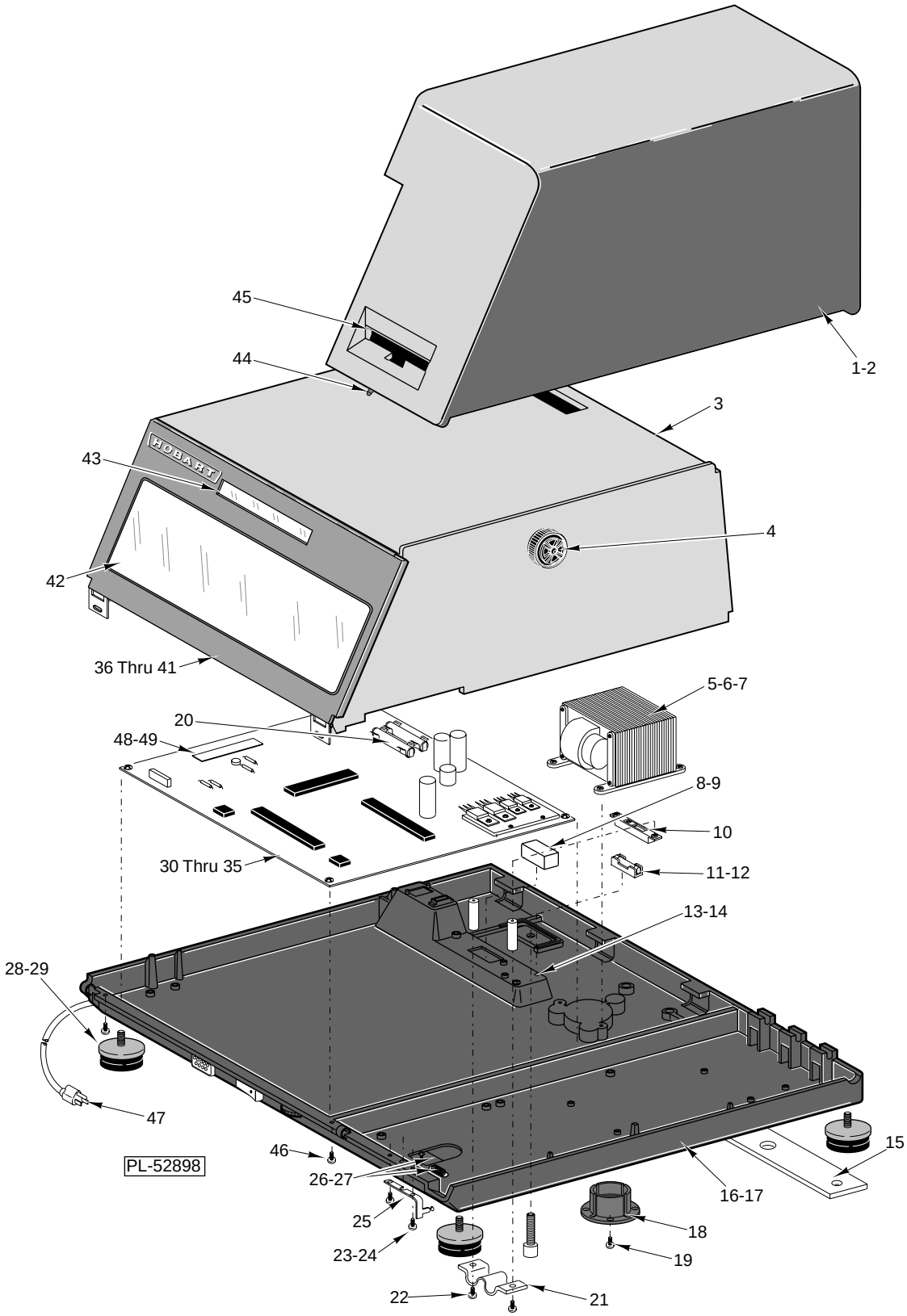

HOUSING ASSEMBLY SP-600P

HOUSING ASSEMBLY SP-600P

ILLUS. PL-52898	PART NO.	NAME OF PART	AMT.
1	00-047050	Printer Cover Assembly (Inclds. items 2, 44 & 45)	1
2	00-259705	Cover - Printer	1
3	00-046845	Cover Assembly (Inclds. items 4, 36 Thru 41 & 43)	1
4	00-183748-00001	Indicator Assy.	1
5	00-046594	Transformer 120/240 V	1
6	SD-015-40	Self-Tapping Screw 8-32 x 3/8 Phil Pan Hd., Type T	4
7	WL-007-07	Lockwasher 8 External Shakeproof	4
8	00-258120	Filter - Power Input	1
9	SD-015-38	Self-Tapping Screw 6-32 x 3/8 Phil Pan Hd., Type T	1
10	00-046559	Switch	1
11	00-046576	Fuseholder	1
12	FE-017-03	Fuse 125 V., 2 A.	1
13	SD-015-40	Self-Tapping Screw 8-32 x 3/8 Phil Pan Hd., Type T	2
14	WL-007-07	Lockwasher 8 External Shakeproof	2
15	00-047065	Cover - Base	1
16	00-047346	Base	1
17	SD-015-40	Self-Tapping Screw 8-32 x 3/8 Phil Pan Hd., Type T	2
18	00-259726	Ring - Clamping (For Post Mounting)	1
19	SC-037-82	Cap Screw 1/4-20 x 7/8 Hex Hd.	3
20	00-046550	Battery (Nicad)	2
21	00-259546	Plate - Strain Relief	1
22	SD-015-38	Self-Tapping Screw 6-32 x 3/8 Phil Pan Hd., Type T	2
23	SC-018-30	Mach. Screw 8-32 x 1/4 Phil Pan Hd.	2
24	00-259825	Washer	2
25	00-044641	Plate - Cover Latch	1
26	00-175481	Spring - Latch	1
27	SC-074-13	Mach. Screw 8-32 x 3/16 Phil Rd. Hd.	1
28	00-259167	Foot	4
29	NS-017-03	Jam Nut 1/4-20 Hex	4
30	00-047493	Board - Processor	1
31	00-259170	Insulator - Mylar	1
32	00-252289	Plug-2 Position	AR
33	SD-015-40	Self-Tapping Screw 8-32 x 3/8 Phil Pan Hd., Type T	1
34	WL-007-07	Lockwasher 8 External Shakeproof	1
35	00-047250	Cable - Display	1
36	00-259688	Retainer - Overlay	1
37	00-046419	Keyboard	1
38	NS-009-02	Mach. Nut 4-40 Hex	3
39	WL-003-03	Lockwasher 4 Medium	3
40	00-042715	Spacer	3
41	00-042714	Stud - Press	1
42	00-046487	Program Assembly	1
43	00-046217	Display - Alpha Numeric	1
44	00-044772	Stud - Printer Cover Latch	1
45	00-044756	Tear Bar Assy.	1
46	SC-120-68	Mach. Screw 8-32 x 5/16 Phil Fil. Hd.	2
47	00-334654	Cord - Power Supply (Angled Plug)	1
48	00-042356	Ram Board (512K PS Ram)	1
49	00-042358	Board Assy. (2 MB PSRAM)	1
	00-535236	Sealer	AR
	00-538960	Adhesive - Loctite #680	AR
	00-541890	Sealer	AR
	00-520228	Adhesive - Loctite 242	AR
	00-512987	Adhesive - Loctite 222	AR
	00-519504	Thermo Joint Compound (2 oz.)	AR
	00-544590	Adhesive - Loctite	AR
	00-183602-00001	Cable - Scale	1
	00-183896	Inspection Plate (Inclds. screws & lockwashers)	1

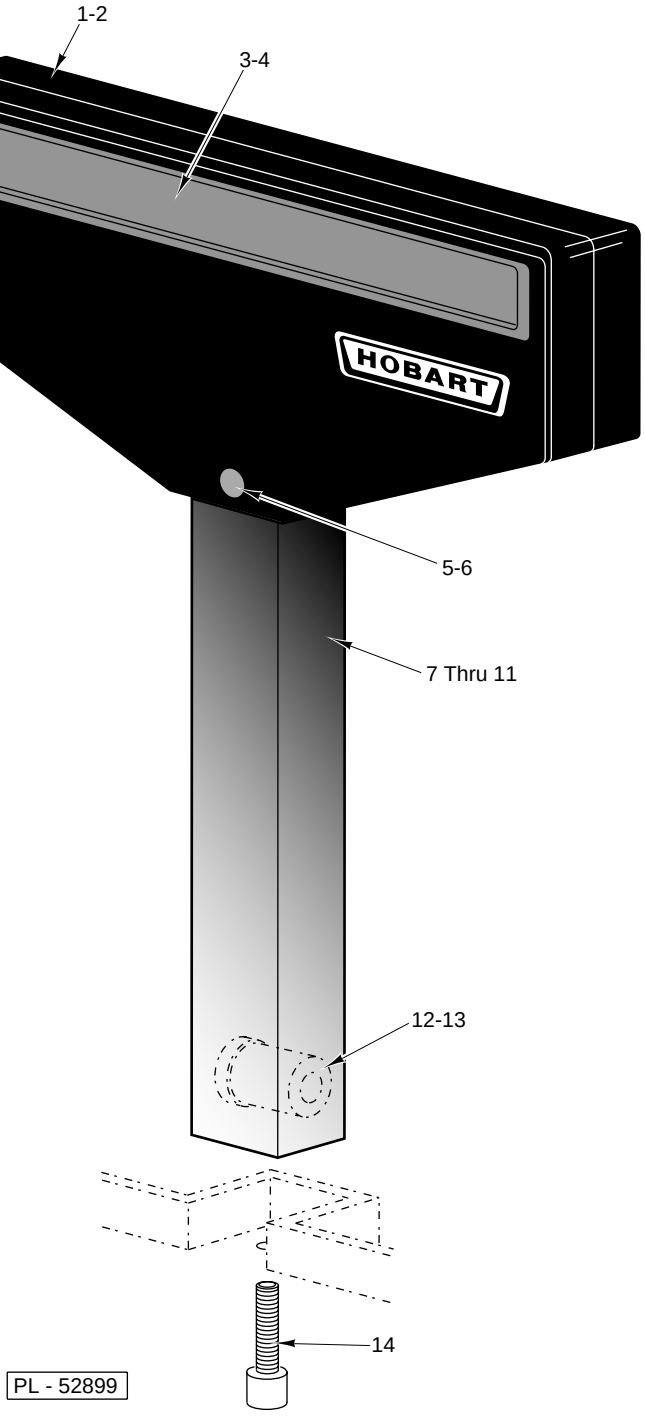

DISPLAY ASSEMBLY SP-600P

DISPLAY ASSEMBLY SP-600P

ILLUS. PL-52899	PART NO.	NAME OF PART	AMT.
1	00-046669	Display Ass. (Inclds. items 2 thru 6)	1
2	00-046425	Cover - Display	2
3	00-046561	Board Assy. VF Display	1
4	SD-032-03	Self - Tapping Screw 6-19 x ⅜ Phil. Pan Hd.	4
5	00-046454	Cover - Screw	2
6	SC-018-30	Mach. Screw 8-32 x ¼ Phil Pan Hd.	2
7	00-259437	Post - Display (14")	1
8	00-259484	Insulator - Post (13.360") (Use with item 8)	1
9	00-047250	Cable - Display	1
10	00-259798	Post Display	1
11	00-183653	Insulator - Post (Use with item 10)	1
12	00-047333	Bar-Draw Down	1
13	SC-115-35	Mach. Screw 8-32 x ½ Flat Hd.	2
14	SC-089-04	Cap Screw ¼-20 x 1 Soc. Hex Hd.	1

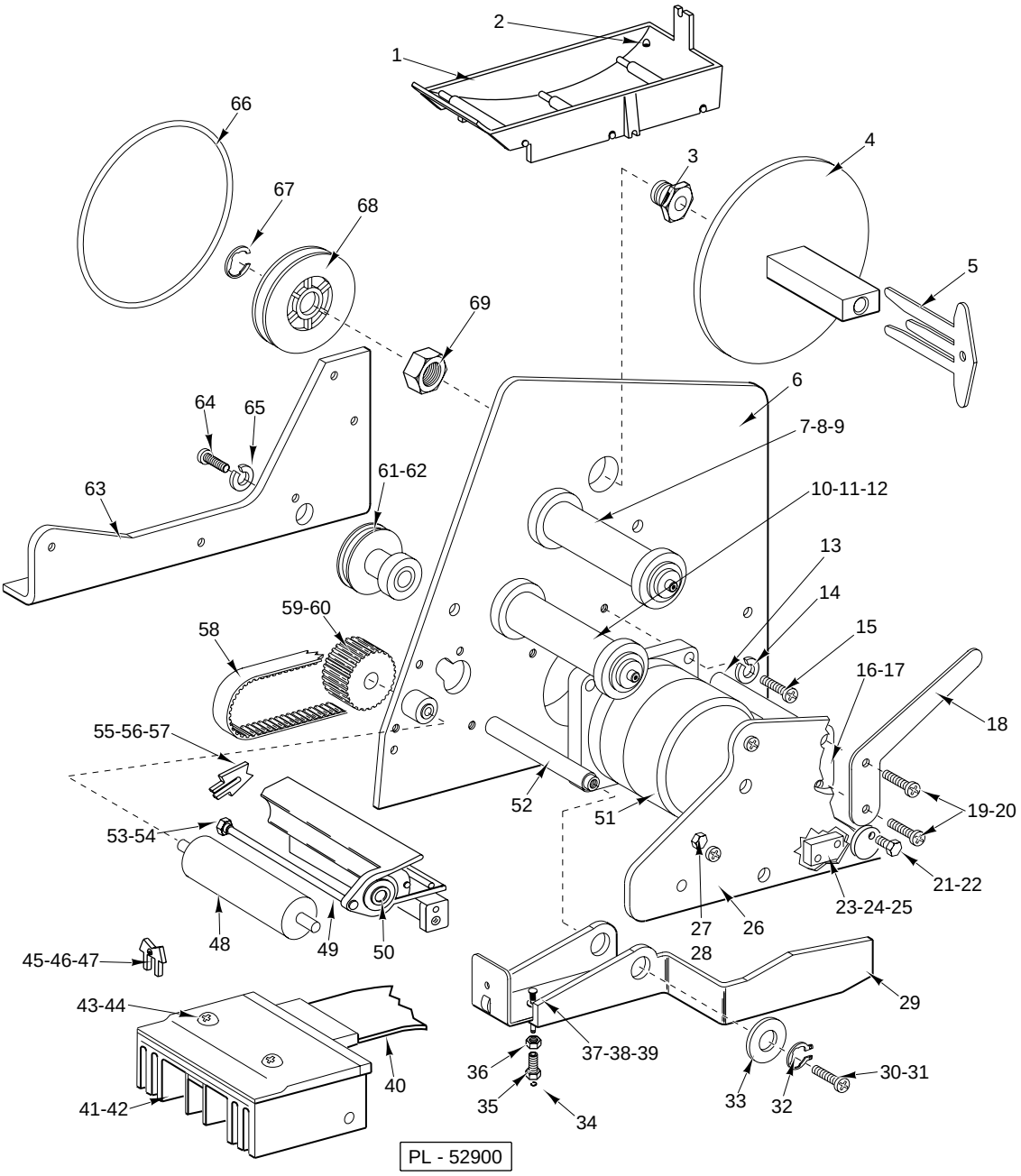

PRINTER ASSEMBLY SP-600P

ILLUS. PL-52900	PART NO.	NAME OF PART	AMT.
1	00-259690	Paper Roll Holder Assy.	1
2	SD-015-40	Self-Tapping Screw 8-32 x ⅜ Phil Pan Hd., Type T	2
3	00-334998	Hub Assy.	1
4	00-184463	Take - Up Shaft Assembly	1
5	00-259197	Key - Label Roll	1
6	00-184483	Left Side Frame Assembly	1
7	00-184394	Guide - Paper	1
8	00-183676	Spacer - Printer Frame	1
9	RR-011-72	Retaining Ring	1

PRINTER ASSEMBLY SP-600P

ILLUS. PL-52900	PART NO.	NAME OF PART	AMT.
10	00-183676	Spacer - Printer Frame	1
11	00-259192	Guide - Paper	1
12	RR-011-72	Retaining Ring	1
13	00-259211	Pivot - Spring Bar	1
14	WL-003-12	Lockwasher 8 Medium	3
15	SC-018-34	Mach. Screw 8-32 x ½ Phil Pan Hd.	3
16	00-184393	Actuator - Head-Up Switch	1
17	00-259797	Spacer	2
18	00-259796	Lever - Print	1
19	SC-112-42	Mach. Screw 6-32 x ½ Phil Pan Hd.	2
20	WL-008-02	Lockwasher 6 Internal Shakeproof	2
21	SC-068-14	Mach. Screw 8-32 x ⅜ Hex Hd.	1
22	00-184287	Eccentric - Support	1
23	00-259144-00001	Head Up Switch Assy.	1
24	SC-119-17	Mach. Screw 3-48 x ⅜ Pan Hd.	2
25	WL-019-65	Lockwasher 3 Medium	2
26	00-183816	Frame - Right	1
27	00-259265	Screw - Dowel	2
28	WL-003-12	Lockwasher 8 Medium	2
29	00-042829	Bar - Head Spring	1
30	SC-018-31	Mach. Screw 8-32 x ⅜ Phil. Pan Hd.	2
31	WL-003-12	Lockwasher 8 Medium	2
32	RR-007-10	Retaining Ring	2
33	00-259606	Washer	1
34	RR-006-13	Retaining Ring	1
35	00-259261	Screw - Adjustment	1
36	NS-018-39	Jam Nut ¼-28 Hex	1
37	00-175157	Plunger	1
38	00-175167	Spring - Compression	1
39	WS-023-21	Washer	1
40	00-259148	Cable - Print Head	1
41	00-047074	Print Head - Thermal	1
42	00-259605	Heatsink	1
43	SC-119-16	Mach. Screw M3 x 6mm Pan Hd.	2
44	WL-019-58	Lockwasher Internal Shakeproof	2
45	00-047368	Sensor - Label Taken	1
46	WL-003-03	Lockwasher 4 Medium	1
47	SC-120-27	Mach. Screw 4-40 x 7/16 Phil Rd. Hd.	1
48	00-259207	Roller - Drive (Ground)	1
49	00-259236	Bar - Peel	1
50	00-184514	Support Assembly	1
51	00-334793	Stepper Motor Assembly (Incldes. Spiral Band Wrapping)	1
52	00-259211	Pivot - Spring Bar	1
53	00-259201	Screw - Peel Bar	1
54	WL-003-12	Lockwasher 8 Medium	1
55	00-184279	Media Sensor Assembly	1
56	SC-113-10	Mach. Screw 4-40 x ⅜ Phil. Pan Hd.	1
57	WS-029-24	Washer	1
58	00-259808	Belt - Timing 109T	1
59	00-259632	Pulley - Drive Roller	1
60	SC-047-74	Set Screw 8-32 x ¼ Headless Cup Pt.	1
61	00-259205	Timing Pulley Assy.	1
62	SC-075-22	Set Screw 5-40 x ¼ Hdls. Cup Pt.	1
63	00-259728	Bracket - Printer	1
64	SC-018-31	Mach. Screw 8-32 x ⅜ Phil. Pan Hd.	7
65	WL-003-12	Lockwasher 8 Medium	7
66	00-259819	Belt - Take-Up Drive	1
67	RR-010-06	Retaining Ring	1
68	00-259817	Take-Up Pulley Assy.	1
69	00-184458	Nut - Special	1
	00-259800	Printer Assy.	1
	00-512987	Adhesive - Loctite 222	AR
	00-519504-00004	Lubricant - Thermal Joint	AR

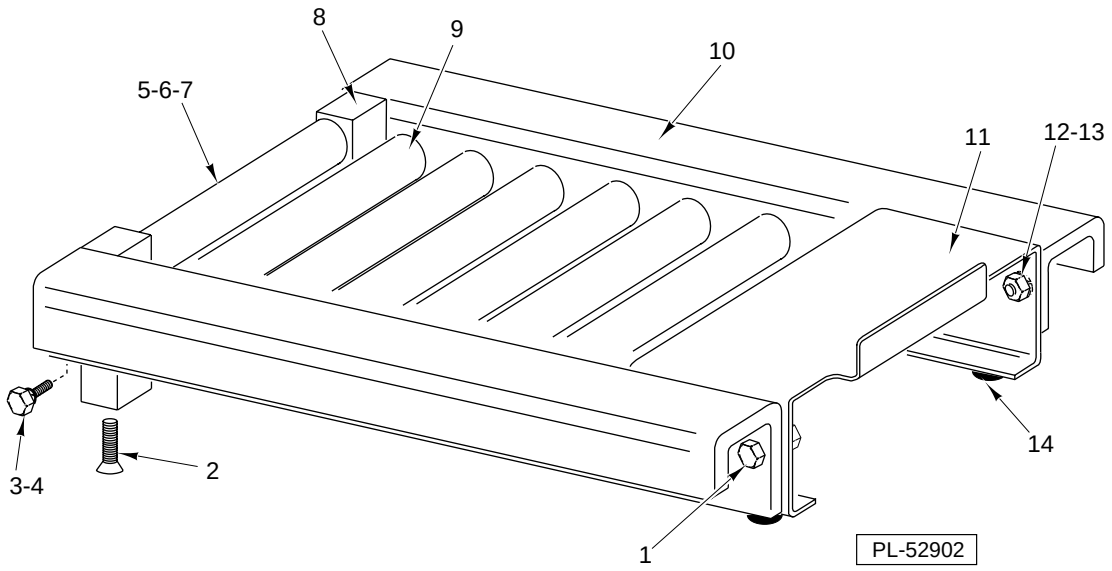

PLATFORM

ILLUS. PL-52902	PART NO.	NAME OF PART	AMT.
1	SC-118-20	Cap Screw ¼-20 x ½ Hex Hd.	4
2	SC-022-32	Mach. Screw ¼-20 x ½ Flat Hd.	2
3	SC-118-20	Cap Screw ¼-20 x ½ Hex Hd.	2
4	WL-003-38	Lockwasher ¼ Medium	2
5	00-175927	Tube-Roller	1
6	00-175924	Bushing	2
7	00-175925	Shaft-Platform	1
8	00-175923	Pivot-Platform Support	2
9	00-130439	Roller -Spring	6
10	00-175926	Frame-Platform	2
11	00-175928	Bracket-Platform Stop	1
12	NS-013-02	Full Nut ¼-20 Hex	1
13	WL-003-38	Lockwasher ¼ Medium	2
14	00-254206	Foot	2
	00-183915	Platform Assy. W/Rollers (NSW)	1

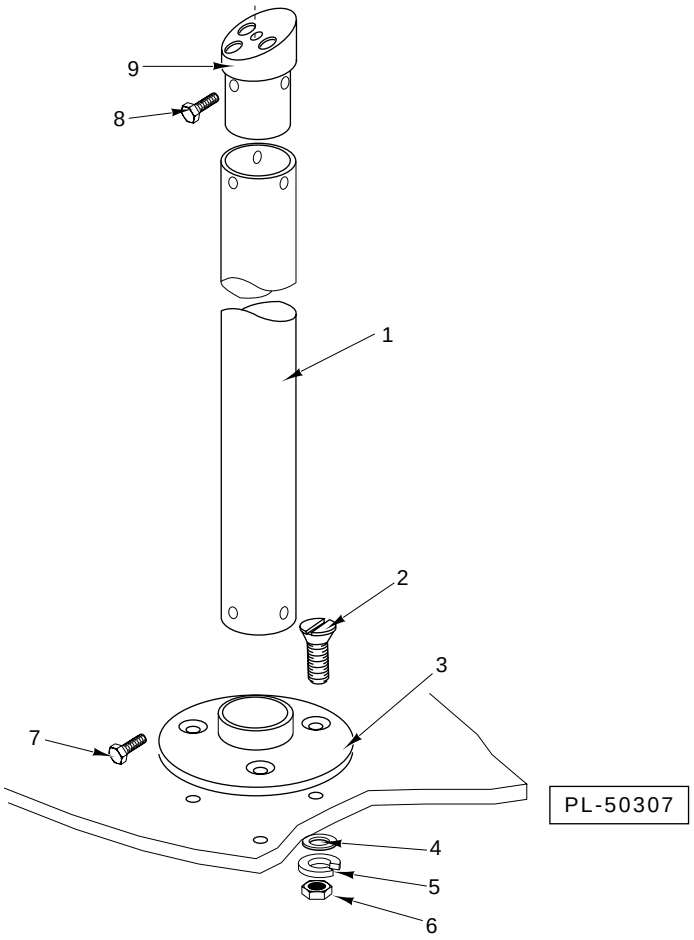

POST COUNTER OR SCALE TABLE

ILLUS. PL-50307	PART NO.	NAME OF PART	AMT.
1	00-254682	Post - Support	1
2	SC-023-48	Mach. Screw ¼-20 x 1⅜ Oval Hd.	3
3	00-252546	Base	1
4	WS-022-10	Washer	3
5	WL-003-39	Lockwasher ¼ Light	3
6	NS-013-02	Full Nut ¼-20 Hex	3
7	SC-116-95	Mach. Screw 8-32 x ⅜ Hex Hd.	3
8	SC-116-95	Mach. Screw 8-32 x ⅜ Hex Hd.	3
9	00-254680	Leg - Keyboard Support	1
	00-182994	Post Support Assy. (Incls. items 1 thru 9)	1

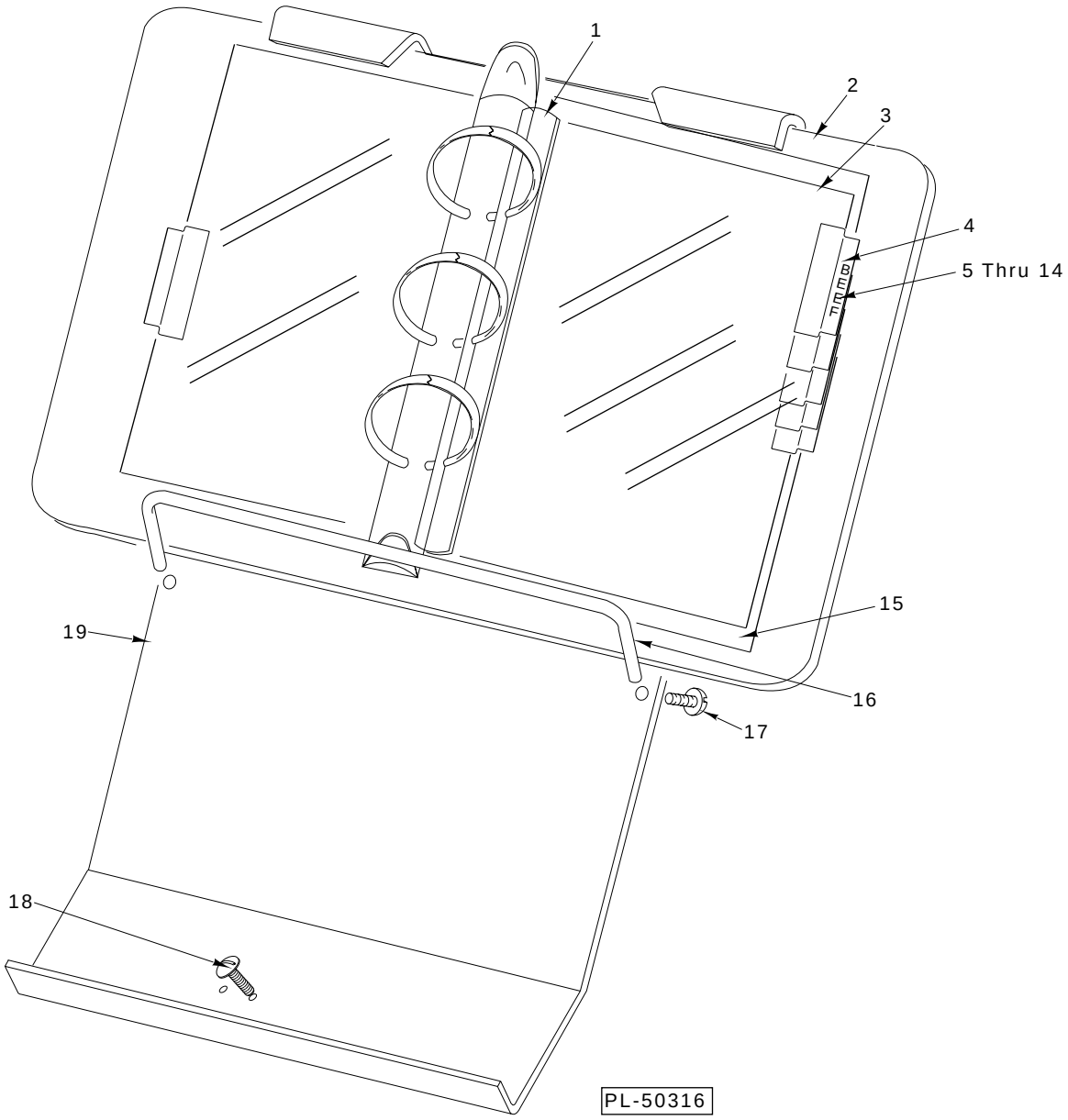

PLU LIBRARY

PLU LIBRARY

ILLUS. PL-50316	PART NO.	NAME OF PART	AMT.
1	00-183752	Strip - Reinforcement	17
2	00-516298	Binder - 3-Ring	1
3	00-258780	Insert - Stiffener	17
4	00-258739	Tab - Index	25
5	00-258738-00001	Identifier - Page (Veal)	2
6	00-258738-00002	Identifier - Page (Poultry)	2
7	00-258738-00003	Identifier - Page (Pork)	3
8	00-258738-00004	Identifier - Page (Misc.)	2
9	00-258738-00005	Identifier - Page (Operating Inst.)	1
10	00-258738-00006	Identifier - Page (Beef)	3
11	00-258738-00007	Identifier - Page (Lamb)	2
12	00-258738-00008	Identifier - Page (Seafood)	2
13	00-258738-00009	Identifier - Page (Cheese)	2
14	00-258738-00010	Identifier - Page (Produce)	2
15	00-183763	Protector Sheet	17
16	00-258762	Rod - Support	1
17	SC-112-42	Mach. Screw 6-32 x ½ Phil Pan Hd.	2
18	SC-110-97	Mach. Screw 10-32 x ½ Truss Hd.	3
19	00-183905	Plate - Library	1
	00-183912	PLU Library Assy. (Incls. items 1 thru 19)	1

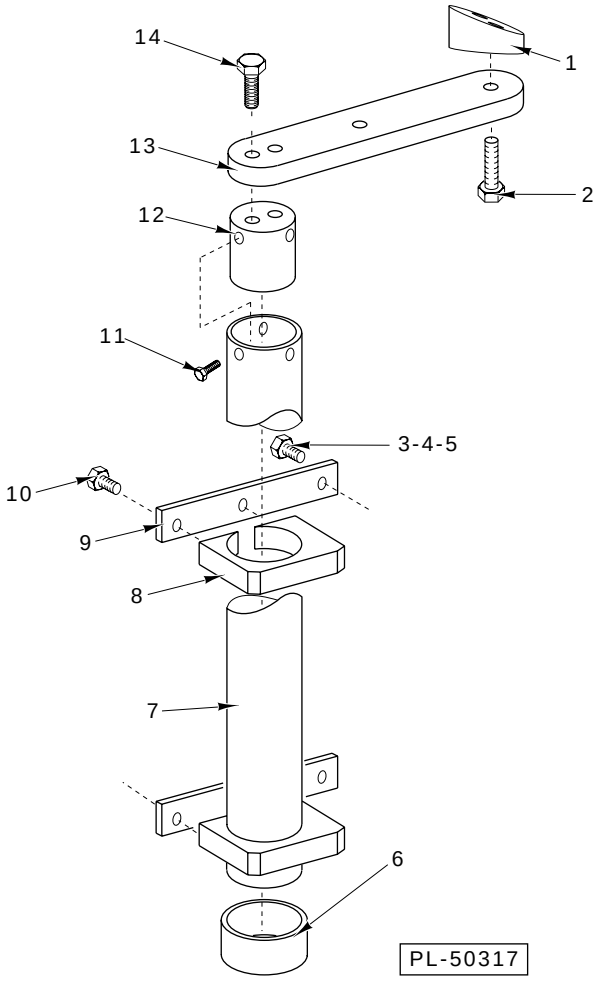

LOOK-UP POST
HWS-3/1865

ILLUS. PL-50317	PART NO.	NAME OF PART	AMT.
1	00-258026	Pivot	1
2	SC-117-91	Cap Screw ¼-20 x 1 Hex Hd.	1
3	SC-118-57	Cap Screw ¼-20 x 2 1/2 Hex Hd.	2
4	WL-003-39	Lockwasher ¼ Light	2
5	NS-013-02	Full Nut ¼-20 Hex	2
6	00-183663	Protector - Cord	1
7	00-258194	Post - Display	1
8	00-254866	Block - Post	2
9	00-258506	Bar - Post Mount	2
10	SC-118-19	Cap Screw ¼-20 x ¾ Hex Hd.	4
11	SC-116-95	Mach. Screw 8-32 x ⅜ Hex Hd.	3
12	00-258146	Post - Support	1
13	00-183687	Arm - Support	1
14	SC-117-91	Cap Screw ¼-20 x 1 Hex Hd.	2
	00-258511	Look Up Post Assy. (Incls. items 1 thru 4)	1

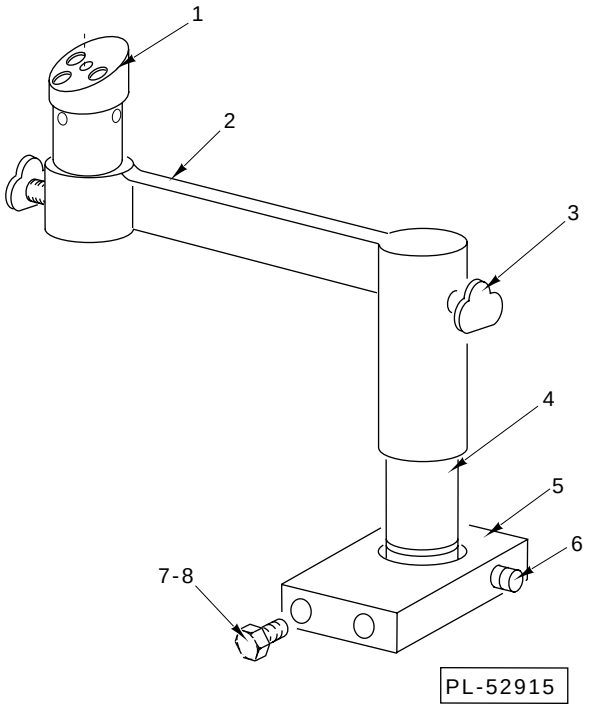

PLU LIBRARY SUPPORT

ILLUS. PL-52915	PART NO.	NAME OF PART	AMT.
1	00-183895	Library Pivot Assy	1
2	00-183931	Printer Pivot Arm Assy	1
3	00-183538	Knob - Film Centering	2
4	00-184345	Pivot - Printer Arm	1
5	00-175891	Block - Printer Pivot	1
6	SC-047-41	Set Screw ⅜-16 x ⅜ Soc. Hdls., Cup Pt.	1
7	SC-118-11	Cap Screw ⅜-16 x ⅞ Hex Hd.	2
8	WL-004-06	Lockwasher ⅜ Medium	2
	00-183911	PLU Library Support Assy. (Incls. items 1 thru 8)	1

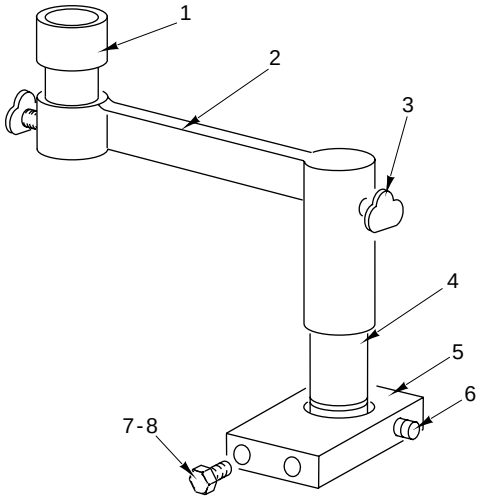

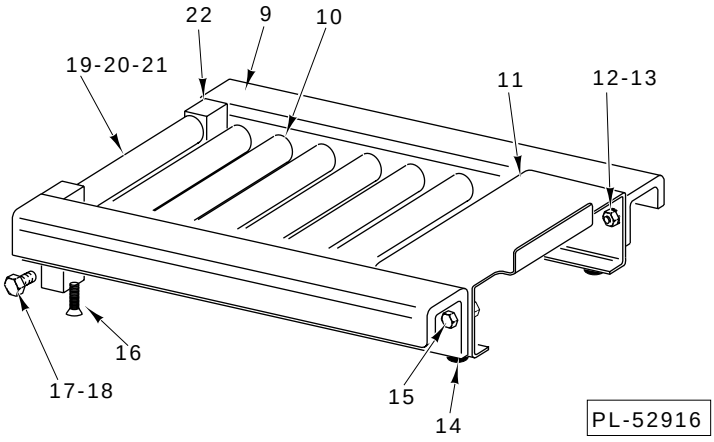

SCALE/PRINTER INSTALLATION

SCALE/PRINTER INSTALLATION

ILLUS. PL-52916	PART NO.	NAME OF PART	AMT.
1	00-175989	Printer Pivot Stud Assy	1
2	00-183931	Printer Pivot Arm Assy	1
3	00-183538	Knob - Film Centering	2
4	00-184345	Pivot - Printer Arm	1
5	00-175891	Block - Printer Pivot	1
6	SC-047-41	Set Screw ⅜-16 x ⅜ Soc. Hdls., Cup Pt.	1
7	SC-118-11	Cap Screw ⅜-16 x ⅞ Hex Hd.	2
8	WL-004-06	Lockwasher ⅜ Medium	2
9	00-175926	Frame-Platform	2
10	00-130439	Roller -Spring	6
11	00-175928	Bracket-Platform Stop	1
12	NS-013-02	Full Nut ¼-20 Hex	4
13	WL-003-38	Lockwasher ¼ Medium	4
14	00-254206	Foot	2
15	SC-118-20	Cap Screw ¼-20 x ½ Hex Hd.	4
16	SC-022-32	Mach. Screw ¼-20 x ½ Flat Hd.	2
17	SC-118-20	Cap Screw ¼-20 x ½ Hex Hd.	4
18	WL-003-38	Lockwasher ¼ Medium	2
19	00-175927	Tube-Roller	1
20	00-175924	Bushing	2
21	00-175925	Shaft-Platform	1
22	00-175923	Pivot-Platform Support	2
	00-183910	Scale/Printer Kit (Incls. items 1 thru 8, 16 & clamps, bushing & fasteners)	1
	FE-021-13	Bushing - Electrical Split (Used w/printer power cord)	1
	00-086964	Clamp (For power cord)	2
	00-086964	Clamp (For power cord)	1
	SC-118-23	Mach. Screw 8-32 x ¼ Phil. Pan Hd. (Use with clamps)	3
	WL-004-40	Lockwasher 10 (Use with clamps)	3
	FE-023-94	Clamp (For printer cord)	1
	SC-007-68	Mach. Screw 8-32 x ⅝ Rd. Hd. (Use with FE023-94)	1
	NS-009-12	Mach. Nut 8-32 Hex (Use with FE023-94)	1
	WL-008-07	Lockwasher 8 (Use with FE023-94)	1
	WS-028-06	Washer (Use with FE023-94)	1
	00-183915	Platform Assy. (Incls. items 9 thru 15 & 17 thru 22)	1