HOBART

CATALOG OF

REPLACEMENT PARTS

ROTISSERIE OVENS WITH WARMER

MODEL	
HRW220P	ML-114904
HRO220P	ML-114903
HRW220	ML-114641
HRO220	ML-114635

A product of HOBART CORPORATION 701 S. RIDGE AVENUE TROY, OHIO 45374-0001

FORM 33677 Rev. A (Jan. 2001)

HRO/HRW220

FORM 33677 Rev. A

TABLE OF CONTENTS WITH PL NUMBERS

	PAGE	DESCRIPTION
NONE	2	TABLE OF CONTENTS
PL-52307	3	PRODUCT ILLUSTRATION
PL-52308	5	DOOR ASSEMBLY
PL-52309	7	CONTROL PANEL (HRO220/HRW220)
PL-53532	9	CONTROL PANEL (HRO220P/HRW220P)
PL-53533	11	ROTISSERIE
PL-52311	13	BLOWER
PL-55202	15	OVEN
PL-53525	17	WARMER
PL-52314	19	RACKS & TRAYS (WARMER)
PL-52315	20	ACCESSORIES

F-33677 Rev. A (Jan. 2001)

© HOBART CORPORATION

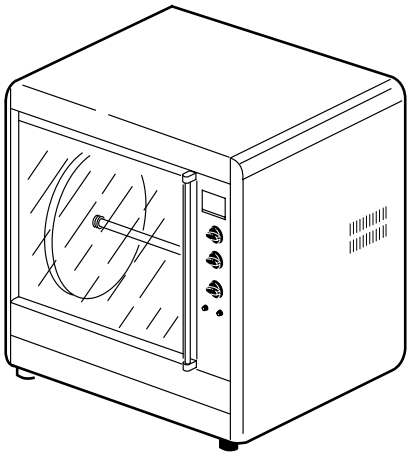

HRO220

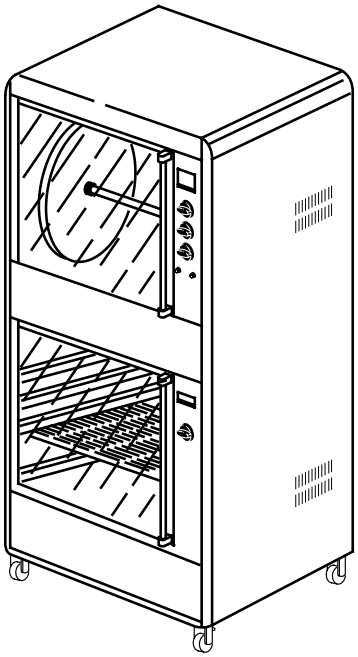

HRO220
WARMER = HRW220

PL-52307

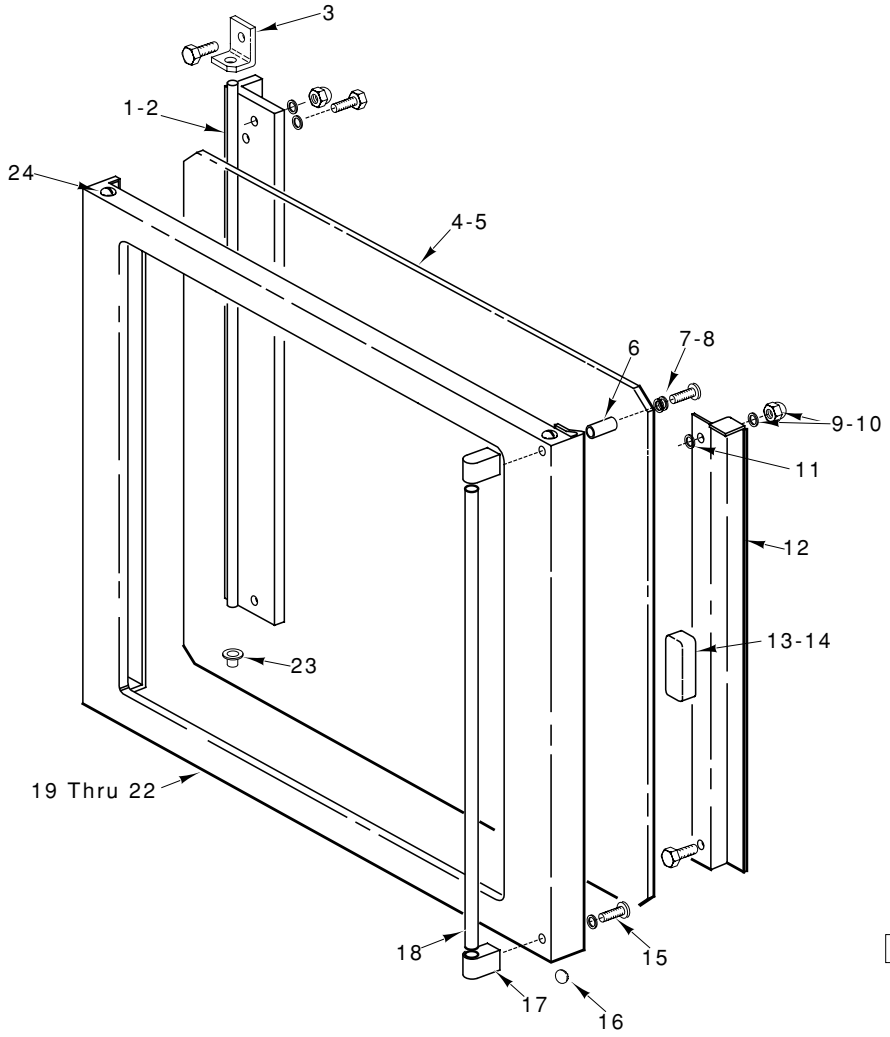

DOOR ASSEMBLY

DOOR ASSEMBLY

ILLUS. PL-52308	PART NO.	NAME OF PART	AMT.
1	00-422905-00047	Angle – Hinge Pin (Use with Service Side Door)	1
2	00-422905-00057	Hinge Pin Assy.	1
3	00-356940	Bracket – Hinge Door	2
4	00-422905-00046	Glass – Door (Service Side)	1
5	00-422905-00056	Glass – Double Door	1
6	00-422905-00087	Bushing – Distance 8 mm	2
7	00-422905-00049	Washer – M6	4
8	00-357568	Washer – Spring Toothed M6	4
9	00-358580	Cap Nut – M5	4
10	00-357553-00057	Lockwasher – M5	4
11	00-357553-00073	Washer – M5	10
12	00-422905-00048	Holder – Block Magnet	1
13	00-360128	Magnet – Door	7
14	00-356850	Magnet – Door (Use with Service Side Door)	8
15	00-357566	Self-Tapping Screw 4.8 x 50 mm Flat Hd.	2
16	00-357752	Plug – Door Handle	2
17	00-356851	Cap – Handle End	2
18	00-422905-00086	Handle – Bar	1
19	00-422905-00045	Frame – Door Assy. (Service Side)	1
20	00-422905-00053	Door – Outer	1
21	00-422905-00054	Door – Inner Assy.	1
22	00-422905-00055	Clamp – Glass Holder	2
23	00-357114	Bushing – Door (HRW220)	8
24	00-422905-00059	Screw – M5 x 8	4
	00-422905-00027	Door – Service Side (Incls. items 1,3,4,6 thru 12,14,15,17,18 & 19)	AR
	00-422905-00028	Door – Customer Side (Incls. items 2,5,12,13,16,20,21,22 & 25)	AR

F-33677 Rev. A (Jan. 2001)

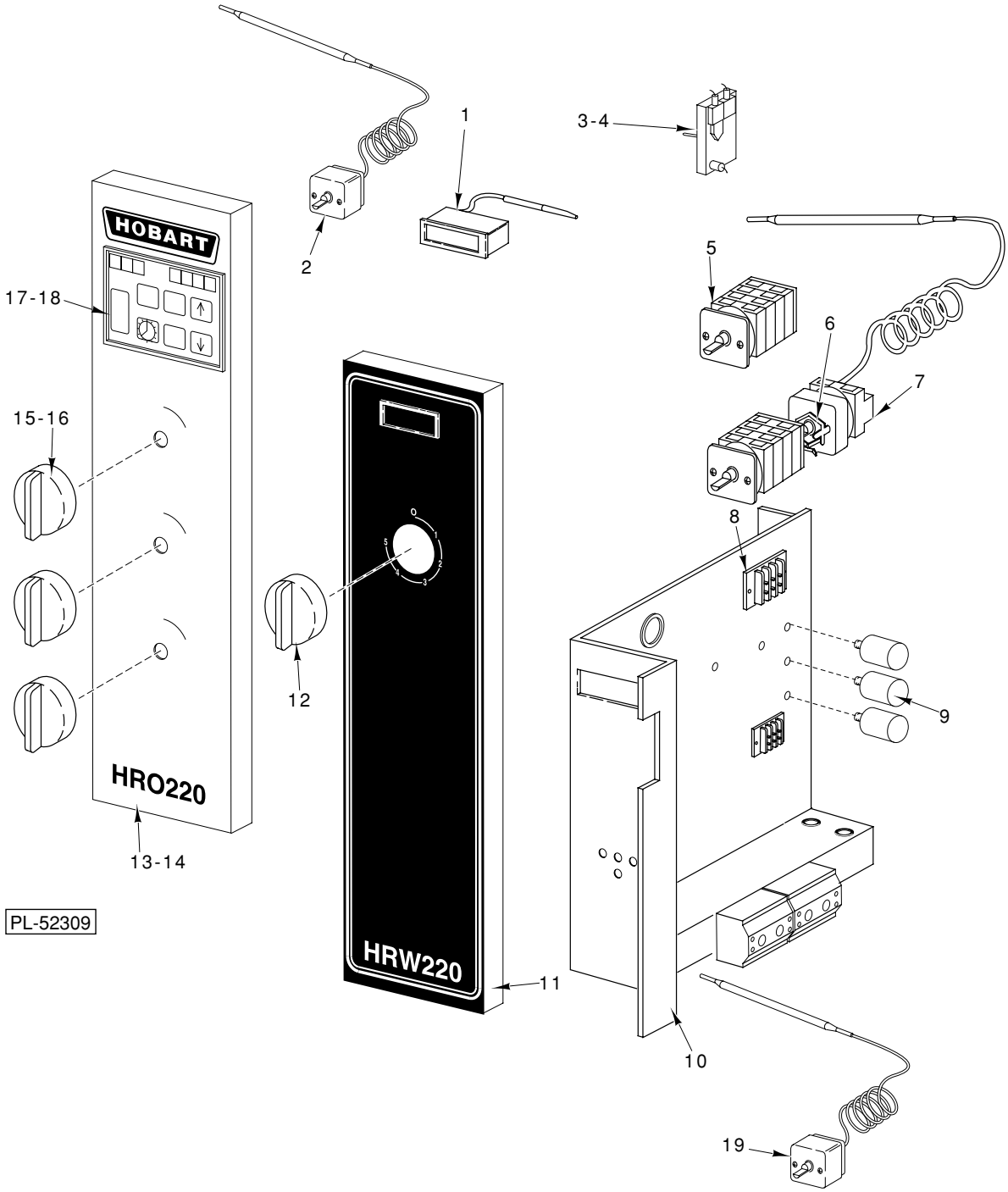

CONTROL PANEL (HRO220/HRW220)

CONTROL PANEL (HRO220/HRW220)

ILLUS. PL-52309	PART NO.	NAME OF PART	AMT.
1	00-360036	Thermometer (Warmer)	1
2	00-360145	Thermostat (Oven)	1
3	00-356946	Sensor – Temperature (Oven)	1
4	00-422905-00022	Bracket	1
5	00-356878	Switch – Rotary (Warmer)	1
6	00-359460-00033	Bracket – Thermostat (Warmer)	1
7	00-357196	Thermostat (Warmer)	1
8	00-356841	Block – Terminal (Warmer)	1
9	00-359460-00057	Capacitor (1.5 mf) (Warmer)	3
10	00-359460-00019	Panel – Electrical Component	1
11	00-422905-00075	Control Panel Assy. (Warmer)	1
12	00-356833	Knob	1
13	00-422905-00015	Control Panel Assy. (Oven)	1
14	00-422905-00014	List Assy.	1
15	00-356833	Knob	3
16	00-359460-00048	Ring – Sealing	AR
17	00-359460-00060	Timer – Digital Display (Oven)	1
18	00-359460-00042	Clip Timer Display (Oven)	1
19	00-360145	Thermostat (Hi-Limit)	1

F-33677 Rev. A (Jan. 2001)

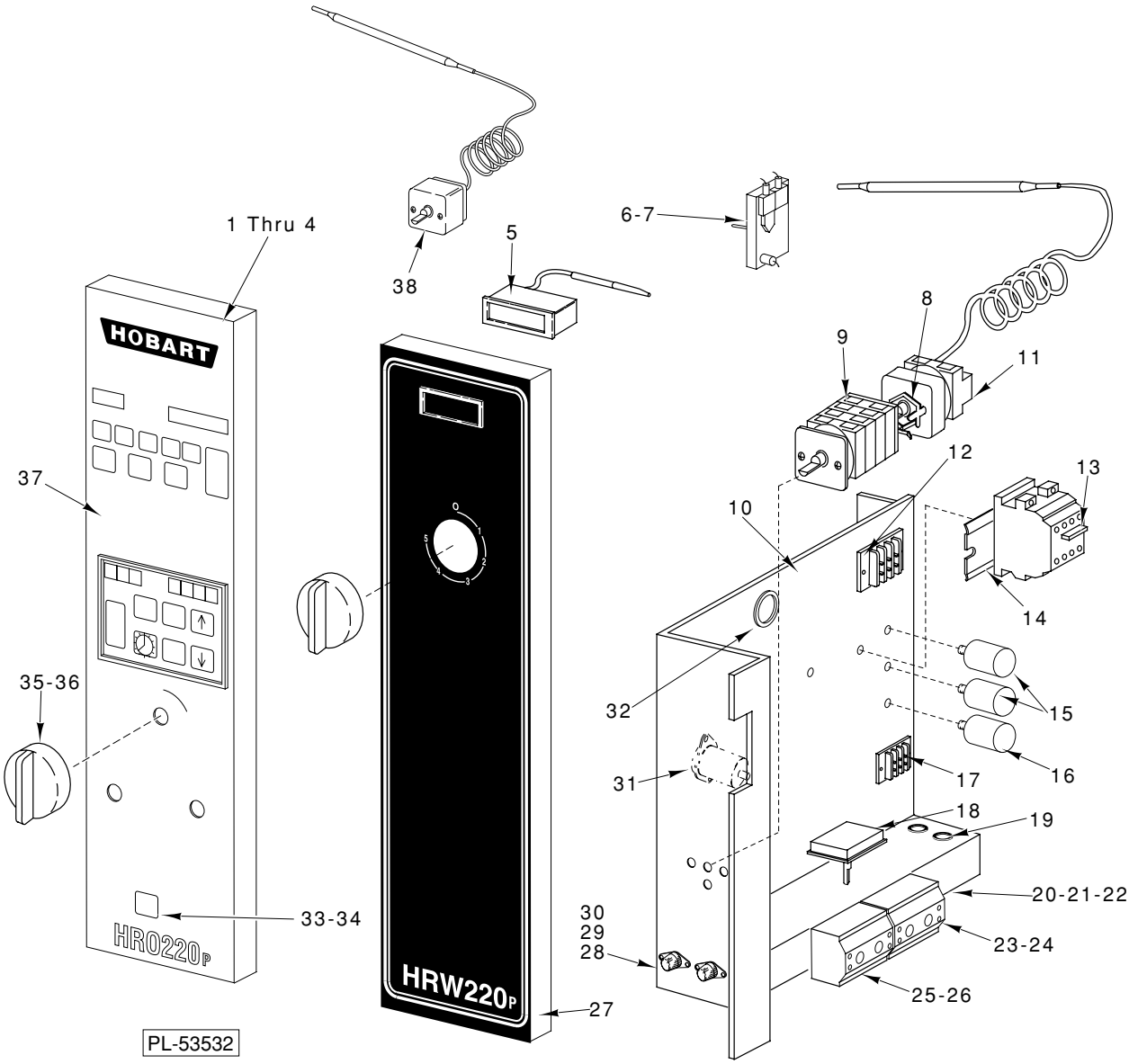

CONTROL PANEL (HRO220P/HRW220P)

CONTROL PANEL (HRO220P/HRW220P)

ILLUS. PL-53532	PART NO.	NAME OF PART	AMT.
1	00-359758-00007	Display	1
2	00-422905-00095	Cover – Display	1
3	00-422905-00014	List Assy.	1
4	00-422905-00093	Panel (HRO220P)	1
5	00-360036	Thermometer (Warmer)	1
6	00-356946	Sensor – Temperature (Oven)	1
7	00-422905-00022	Bracket	1
8	00-359460-00033	Bracket – Thermostat (Warmer)	1
9	00-356839	Switch – Main (On/Off) (Warmer)	1
10	00-359460-00019	Panel – Electrical Component	1
11	00-357196	Thermostat (Warmer)	1
12	00-357553-00035	Block – Terminal (Warmer)	1
13	00-360151	Relay	1
14	00-356842	Bracket – Terminal Block Mounting	1
15	00-359460-00057	Capacitor (1.5 mf) (Warmer)	2
16	00-360201	Capacitor (2.5 mf) (Warmer)	1
17	00-356841	Block – Terminal (Warmer)	1
18	00-360145	Thermostat	1
19	00-358521-00046	Strain – Relief	2
20	00-360280	Plate – Ground	1
21	00-357553-00056	Nut – M5	1
22	00-357553-00058	Bolt – M5 x 16	1
23	00-358712-00002	Block – Terminal “4,5,6”	1
24	00-358713	Screw – M4 x 20	2
25	00-358712-00001	Block – Terminal “1,2,3”	1
26	00-358713	Screw – M4 x 20	2
27	00-422905-00075	Control Panel Assy. (Warmer)	1
28	00-356840	Holder – Fuse	2
29	00-359460-00083	Fuse	1
30	00-358713	Screw – M4 x 20	4
31	00-357553-00152	Capacitor (1.5 mf)	1
32	00-360143	Bushing	2
33	00-359758-00011	Holder – Meat Probe	1
34	00-422905-00096	Plate – Mounting	1
35	00-359460-00048	Ring – Sealing	2
36	00-356833	Knob	2
37	00-422905-00013	Overlay (Use with item 4)	1
38	00-360145	Thermostat	1

F-33677 Rev. A (Jan. 2001)

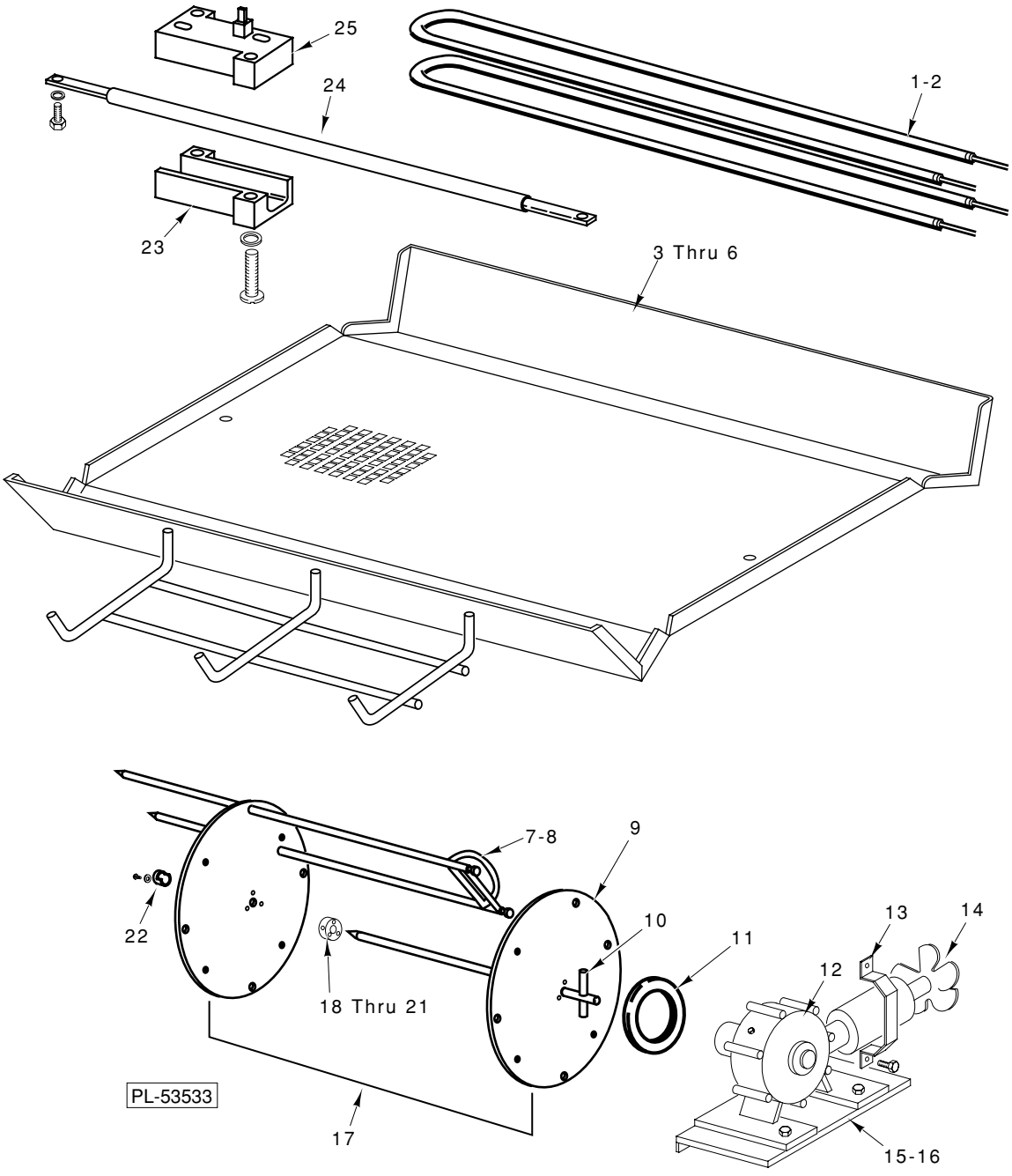
25
24
1-2
23
3 Thru 6
7-8
9
22
10
11
13
14
12
18 Thru 21
PL-53533
17
15-16

ROTISSERIE

ROTISSERIE

ILLUS. PL-53533	PART NO.	NAME OF PART	AMT.
1	00-422905-00010	Element – Heating (2000 Watts Each Unit) (240 V.)	2
2	00-422905-00009	Element – Heating (2000 Watts Each Unit) (208 V.)	2
3	00-422905-00026	Plate – Lamp Holder with Air Slots	1
4	00-359460-00066	Strip – Lamp Holder Mounting	2
5	00-422905-00006	Strip – Mounting	2
6	00-359460-00013	Protector – Quartz Lamp	2
7	00-360152	Fork – Meat	5
8	00-360152-00003	Spit (Rotisserie) (Set of 5 Meat Forks)	1
9	00-425900-00301	Disc – Rotor (3 mm) (Universal) (5 Spit)	2
10	00-360134	Shaft	1
11	00-360137	Seal – Ring	1
12	00-422905-00020	Motor – Drive System	1
13	00-359460-00041	Guard – Fan	1
14	00-360248	Blade – Fan	1
15	00-422905-00021	Plate – Protector	1
16	00-422905-00019	Support – Motor	1
17	00-425900-00001	Rotor Assy. (Incls. items 9,10, & 18 thru 21)	1
18	00-360132	Disc – Stud	1
19	00-425900-00302	Bolt – M6 x 20 SST	6
20	00-513886	Sealer	AR
21	SC-117-32	Set Screw – M8 x 1.25 x 16 mm	4
22	00-422905-00023	Support – Bearing	1
23	00-360156	Holder – Quartz Lamp	4
24	00-360155	Lamp – Quartz	2
25	00-360129	Holder – Quartz Lamp Base	4

F-33677 Rev. A (Jan. 2001)

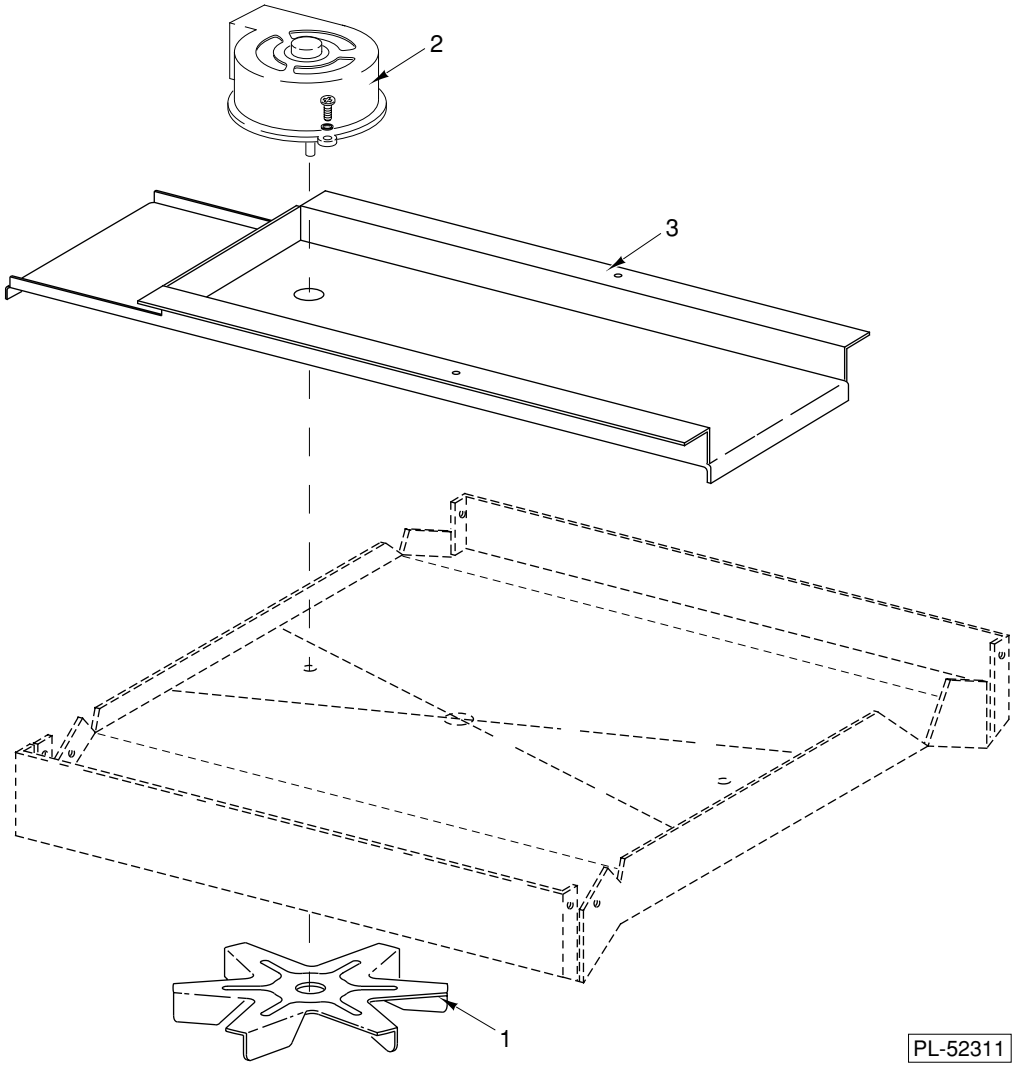

BLOWER

BLOWER

ILLUS. PL-52311	PART NO.	NAME OF PART	AMT.
1	00-422905-00008	Blade – Fan	AR
2	00-359460-00025	Blower (W/Fan Blade)	1
3	00-422905-00007	Fan – Mtg.	1

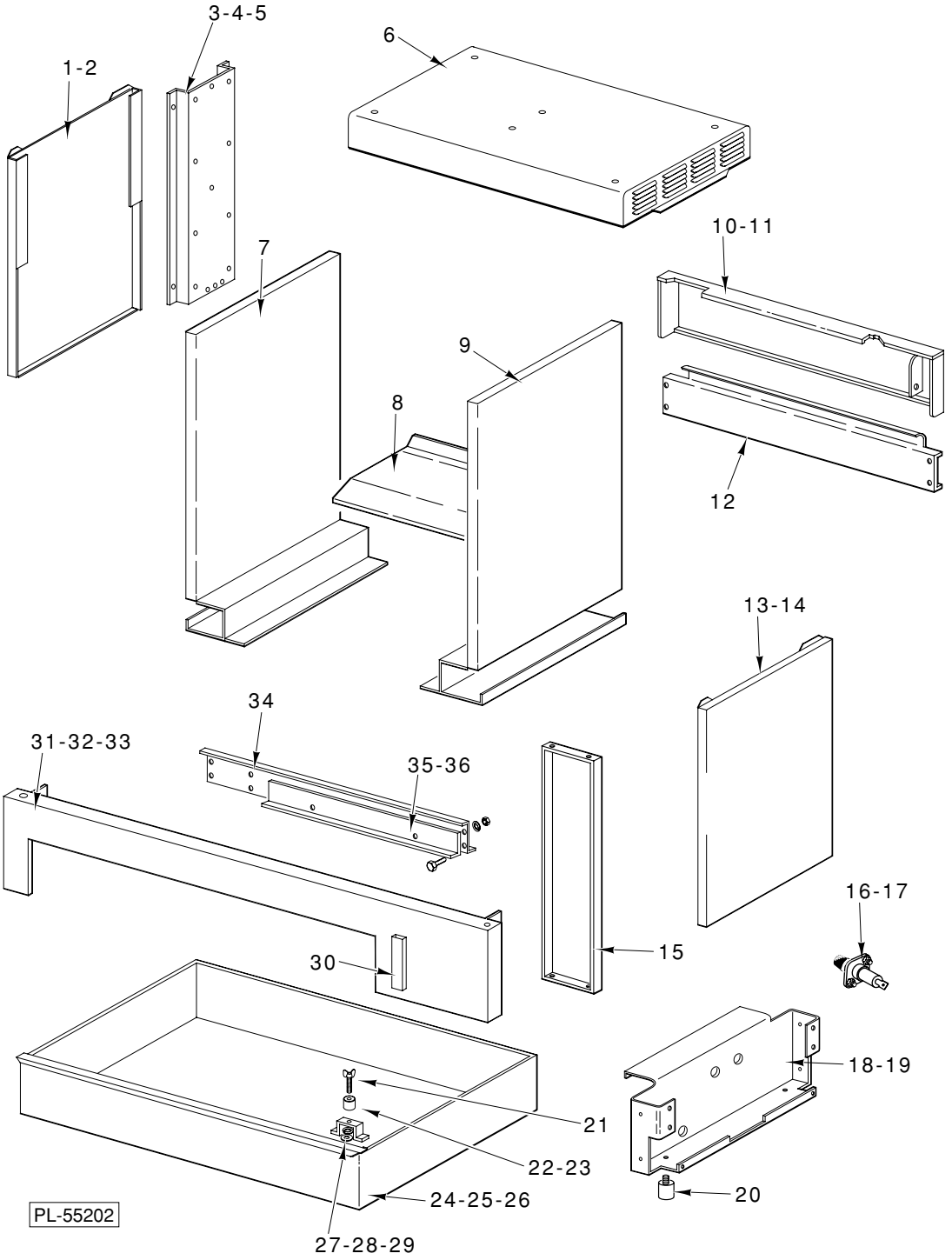
3-4-5
6
1-2
10-11
7
9
8
12
13-14
34
31-32-33
35-36
16-17
15
30
18-19
21
22-23
20
24-25-26
PL-55202
27-28-29

OVEN

OVEN

ILLUS. PL-55202	PART NO.	NAME OF PART	AMT.
1	00-422905-00032	Panel – Outer (L.H.) (Oven)	1
2	00-422905-00064	Panel – Outer (L.H.) (Oven & Warmer)	1
3	00-422905-00004	Plate – Reinforcement (L.H.)	1
4	00-422905-00005	Plate Assy. (L.H.)	1
5	00-422905-00029	Plate Assy. (R.H.)	1
6	00-422905-00030	Top Assy.	1
7	00-422905-00001	Panel – Inner Side	1
8	00-422905-00080	Plate – Bottom (Warmer)	1
9	00-422905-00067	Panel – Inner Warmer Side	1
10	00-422905-00062	Panel – Lower Front (Customer Side) (Warmer)	1
11	00-422905-00013	Panel – Lower Front (Customer Side)	1
12	00-422905-00003	Reinforcement – Profile	1
13	00-422905-00033	Panel – Outer (R.H.) (Oven)	1
14	00-422905-00065	Panel – Outer (R.H.) (Warmer)	1
15	00-422905-00016	Panel – Customer Side	1
16	00-356840	Holder – Fuse (HRO220P/HRW220P)	1
17	00-422905-00097	Fuse (HRO220P/HRW220P)	1
18	00-422905-00041	Tray – Spark	2
19	00-422905-00094	Panel – Mtg. (HRO220P/HRW220P)	1
20	00-422905-00002	Leg – Rubber (Oven)	4
21	00-360207	Screw – Wing	1
22	00-360205	Gasket – Seat	1
23	00-359460-00054	Set Screw – Grease Sealing	1
24	00-422905-00024	Tray Assy.	1
25	00-422905-00063	Tray Holder Assy. (Warmer)	1
26	00-422905-00025	Plate – Grease	2
27	00-360206	Gasket – Drain	1
28	00-359460-00055	Washer – Grease Sealing	2
29	00-359460-00056	Bolt – Grease Sealing	1
30	00-359758-00012	Probe – Meat (HRO220P/HRW220P)	1
31	00-422905-00061	Panel – Lower Front (Operator's Side) (Warmer)	1
32	00-422905-00012	Panel – Lower Front (SST)	1
33	00-422905-00092	Panel – Lower Front (HRO220P/HRW220P)	1
34	00-422905-00003	Reinforcement – Profile	1
35	00-422905-00068	Reinforcement – Lateral Top Left (Oven)	1
36	00-422905-00069	Reinforcement – Lateral Top Right (Warmer)	1
	00-359460-00058	Strain Relief	1
	00-422905-00011	Reinforcement – Hinge	4

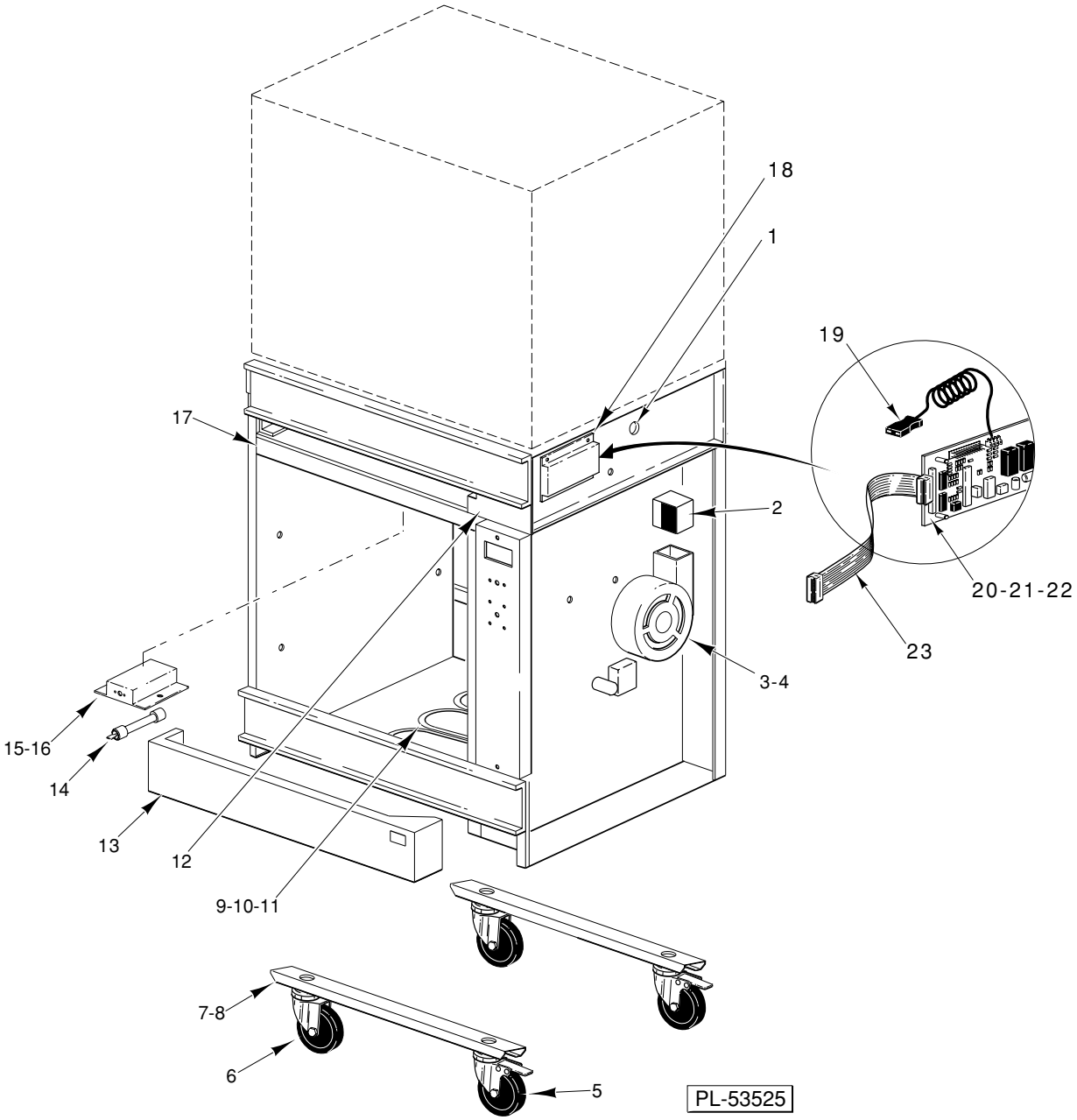

WARMER

WARMER

ILLUS. PL-53525	PART NO.	NAME OF PART	AMT.
1	00-360143	Bushing	2
2	00-422905-00079	Nozzle – Blow	1
3	00-359460-00025	Blower (W/Fan Blade)	1
4	00-422905-00072	Plate – Fan Mtg.	1
5	00-360244	Caster – W/Lock	2
6	00-422905-00060	Caster – W/O Lock	2
7	00-422905-00083	Plate – Wheel Mtg.	1
8	00-422905-00082	Plate – Backup	2
9	00-360047	Element – Heating	1
10	00-360112	Bracket – Heating Element	1
11	00-356944	Plate – Mounting	1
12	00-422905-00076	Plate – Cover	1
13	00-422905-00012	Panel – Lower Front (SST)	1
14	00-360446	Lamp – Halotherm (200 W.)	1
15	00-360240	Holder – Lamp	2
16	00-356861	Lamp – Reflector (Halogen)	1
17	00-422905-00078	Plate – Ceiling	1
18	00-359758-00008	Cover – Controls Circuit Board (Use with item 20)	1
19	00-359758-00011	Receptacle – Meat Probe (HRO220P)	1
20	00-359460-00061	Timer – Control (12 Hr.)	1
21	00-422905-00105	Fuse – 63 MA (PC Board)	1
22	00-422905-00100	Controls – Circuit Board (208 V.)(HRO220P)	1
23	00-359758-00014	Ribbon – Cable (HRO220P)	1

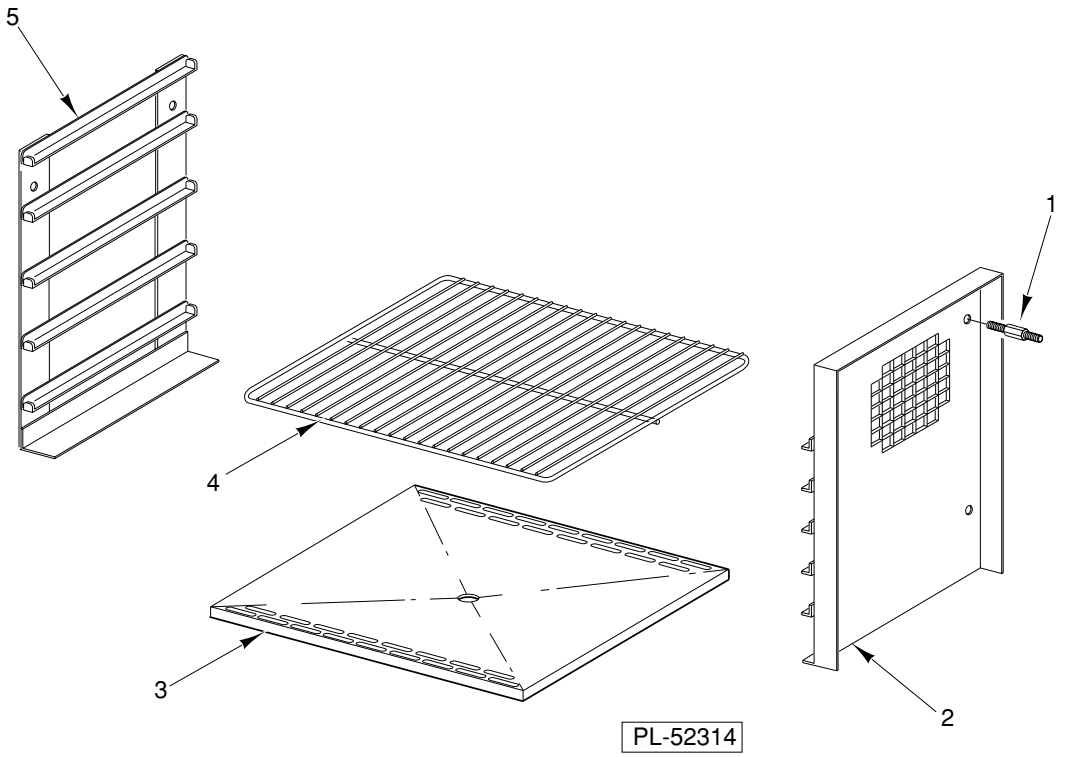

RACKS & TRAYS (WARMER)

RACKS & TRAYS (WARMER)

ILLUS. PL-52314	PART NO.	NAME OF PART	AMT.
1	00-360136	Spacer – Fan Guard	4
2	00-422905-00071	Fan Cover – Warmer Assy.	1
3	00-422905-00080	Plate – Bottom (Warmer)	1
4	00-422905-00081	Rack – Stainless Steel Wire	3
5	00-422905-00070	Rack Slide Assy.	1

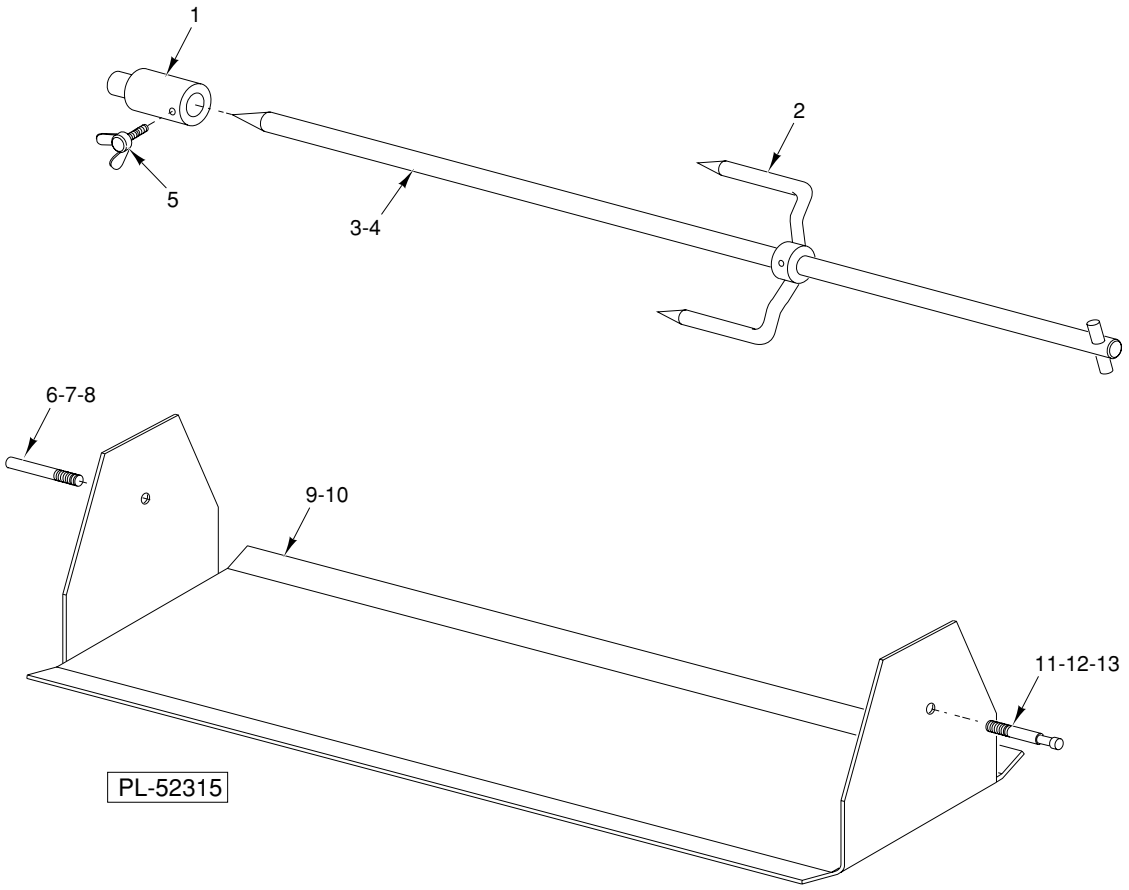

ACCESSORIES

ILLUS. PL-52315	PART NO.	NAME OF PART	AMT.
1	00-360298	Sleeve – Spit	1
2	00-360299	Fork – Spit	2
3	00-360300	Shaft – Spit	1
4	00-360279	Split – Turkey Assy. (Incls. items 1,2,3 & 5)	1
5	00-360297	Screw – Wing (M5)	3
6	00-360385	Glide Pin	1
7	SL-005-08	Spring – Loading	2
8	NS-047-13	Nut – M6 x 1.0 Hex SST	2
9	00-360383	Plate – Baking	1
10	00-360278	Plate – Baking Assy. (Incls. items 6 thru 9 & 11 thru 13)	1
11	00-360384	Drag Pin	1
12	SL-005-08	Spring – Loading	2
13	NS-047-13	Nut – M6 x 1.0 Hex SST	2
	00-360277	Basket	1
	00-357896	Rack – Chicken (Three-Position)	1
	00-359579	Spit-V (Short) (Single-Position)	1