CATALOG OF REPLACEMENT PARTS



NSW Wrapper NSW (ML's 44047, 44079, 44088, 44055)

A product of HOBART 701 S. RIDGE AVENUE TROY, OHIO 45374-0001

FORM 19207 Rev. B (September 2020)

 © HOBART 2020

Table of Contents

5 PLATFORM
7 CONTROL BOX (LEFT SIDE)
9 CONTROL BOX (RIGHT SIDE)
11 JUNCTION BOX (LH)
13 JUNCTION BOX (RH)
15 CONTROL PANEL
19 MOTOR AND CASTER
23 PANELS
27 BANDS AND BRACKETS
29 MAIN DRIVE SHAFT
31 INTAKE (LEFT SIDE)
35 INTAKE (TOP AND RIGHT SIDE)
39 INTAKE (LOWER PORTION)
43 ELEVATOR PLATFORM
45 ELEVATOR SUPPORT
47 ELEVATOR LEVER
49 SIDE CLAMP
53 UPPER PUSHER
57 UNDERFOLDER
61 CHAIN AND SPROCKETS
65 BELT SEALER
69 FILM SELECTOR
73 KNIFE AND PULL DOWN ASSEMBLY (WITHOUT CURTAIN)
77 KNIFE AND PULL DOWN ASSEMBLY (WITH CURTAIN)
79 FILM LENGTH
83 FILM LENGTH (WITH PLASTIC LINKS)
85 GRIPPER
89 GRIPPER LEVER
91 FILM CHANGER SOLENOID ASSEMBLY
93 FILM SUPPLY
97 CHAMBER
99 DISCHARGE CONVEYOR ASSEMBLY
103 INTERMEDIATE CONVEYOR
107 INCLINED CONVEYOR
111 LINK ASSEMBLY
113 FILM ACCESS DOOR
115 SUPPLY HOLDER (OPTIONAL)
117 SIDE SHELF KIT (OPTIONAL)
119 FRONT SHELF KIT (OPTIONAL)
121 MISCELLANEOUS LISTING

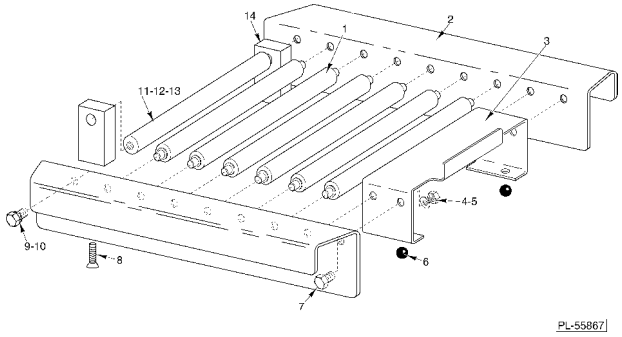

PLATFORM

PLATFORM

ILLUS. PL-55867	PART NO.	NAME OF PART	AMT.
1	00-130439	Roller - Spring	6
2	00-175926	Frame - Platform	2
3	00-175928	Bracket - Platform Stop	1
4	NS-013-02	Nut 1/4-20 Hex	4
5	WL-003-38	Lockwasher 1/4 Helical	4
6	00-254206	Foot	2
7	SC-118-20	Cap Screw 1/4-20 x 1/2 Hex Hd	4
8	SC-022-32	Mach. Screw 1/4-20 x 1/2 Slotted Flat Hd. (SST)	2
9	SC-118-20	Cap Screw 1/4-20 x 1/2 Hex Hd	2
10	WL-003-38	Lockwasher 1/4 Helical	2
11	00-175927	Tube - Roller	1
12	00-175924	Bushing	2
13	00-175925	Shaft - Platform	1
14	00-175923	Pivot - Platform Support	2
	00-183915	Platform Assy. (Incls. 1 thru 7 & 9 thru 14)	1
	00-183704	Platter - Scale (LSWS)	1

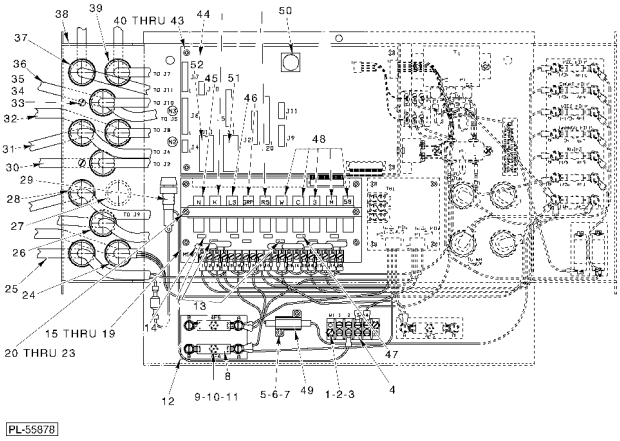

CONTROL BOX
(LEFT SIDE)

CONTROL BOX
(LEFT SIDE)

ILLUS. PL-55878	PART NO.	NAME OF PART	AMT.
1	SC-112-42	Mach. Screw 6-32 x 1/2 Phil. Pan Hd	2
2	WL-008-01	Lockwasher #6 Internal Shakeproof	2
3	NS-009-07	Nut 6-32 Hex	2
4	00-259986	Block - Terminal	1
5	SC-111-76	Mach. Screw 4-40 x 5/16 Phil. Pan Hd	2
6	WL-008-45	Lockwasher #4 Internal Shakeproof	2
7	NS-009-02	Nut 4-40 Hex	2
8	FE-024-17	Fuse (0.5 Amp.)	2
9	SC-109-48	Mach. Screw 6-32 x 1/2 Phil. Flat Hd	4
10	WL-008-01	Lockwasher #6 Internal Shakeproof	4
11	NS-009-07	Nut 6-32 Hex	4
12	00-259984	Block - Fuse	1
13	00-332048-00005	Fuse - Subminiature (5 Amp.)	5
14	00-332222	Varistor Assy	6
15	00-259957	Module - Board Assy	1
16	WS-028-06	Washer	4
17	SC-018-28	Mach. Screw 6-32 x 1/4 Phil. Pan Hd	4
18	WL-008-01	Lockwasher #6 Internal Shakeproof	4
19	00-258300-00003	Spacer 1/4 x 1/2	4
20	00-183832	Bracket - Mounting Module Board	1
21	00-258300-00002	Spacer 1/4 x 1 1/6	2
22	SC-018-28	Mach. Screw 6-32 x 1/4 Phil. Pan Hd	2
23	WL-008-01	Lockwasher #6 Internal Shakeproof	2
24	00-259993-00001	Left Cable Assy	1
25	00-049388	NLA - Obsolete--Solenoid Assy. (110-115/50-60 Hz.)	1
26	00-175475	Control Clutch Cable Assy	1
27	PB-004-01	Plug Button	1
28	00-175480	Film Supply Switch Cable Assy	1
29	00-440857-00001	Harness - In Line Fuse	1
30	00-175469	Intake Cable Assy	1
31	00-183848	Jam Detect Cable Assy	1
32	00-259925	Display Cable Assy	1
33	SC-018-31	Mach. Screw 8-32 x 3/8 Phil. Pan Hd	2
34	WL-008-07	Lockwasher #8 Internal Shakeproof	2
35	NS-009-12	Nut 8-32 Hex	2
36	00-183850	Stop/Start Cable Assy. (To Start/Stop & Keyboard)	1
37	00-259996	Rotary Pot Cable Assy	1
38	00-175973	Control Box & Shield	1
39	00-259998	Switch Sensing Cable Assy	1
40	00-258300-00003	Spacer 1/4 x 1/2	4
41	SC-018-28	Mach. Screw 6-32 x 1/4 Phil. Pan Hd	4
42	WL-008-01	Lockwasher #6 Internal Shakeproof	4
43	WS-028-06	Washer	4
44	00-175473	Control Board Assy	1
45	00-259879	Module - AC Output	2
46	00-259868	Module - DC Output	3
47	00-332048-00002	Fuse - Subminiature (2 Amp.)	2
48	00-259879	Module - AC Output	4
49	00-334705	Resistor (5 Ohms)	1
50	00-257130	Battery (3 V.)	1
51	00-259003-00054	PROM U1	1
52	00-259001	RAM U10	1

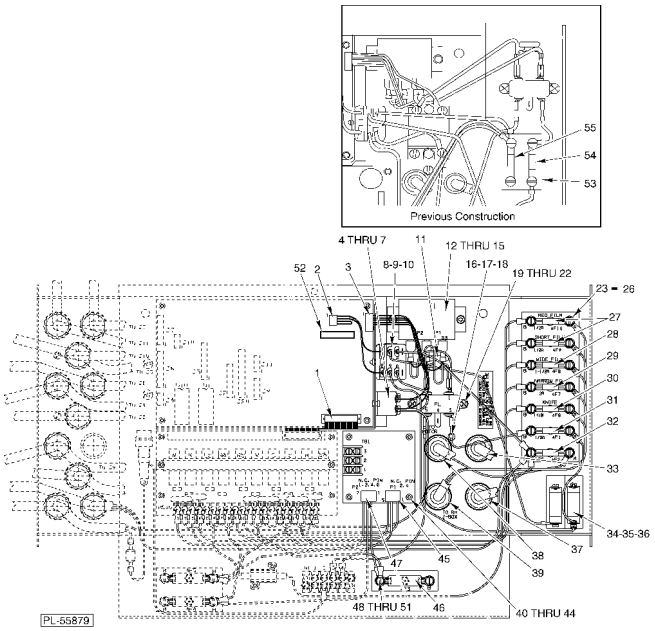

CONTROL BOX
(RIGHT SIDE)

CONTROL BOX
(RIGHT SIDE)

ILLUS. PL-55879	PART NO.	NAME OF PART	AMT.
1	00-259923	Control/MSIO Board Cable Assy	1
2	00-259927-00001	Harness - Relay	1
3	00-259928-00001	Harness - CPU/SSR Power	1
4	00-184015	Relay	1
5	NS-009-12	Nut 8-32 Hex	1
6	WL-008-07	Lockwasher #8 Internal Shakeproof	1
7	SC-018-31	Mach. Screw 8-32 x 3/8 Phil. Pan Hd	1
8	WL-008-01	Lockwasher #6 Internal Shakeproof	2
9	00-259987	Relay	1
10	SC-009-79	Mach. Screw 6-32 x 5/16 Slotted Rd. Hd	2
11	00-331536	Varsitor Assy	1
12	00-333632	Transformer	1
13	SC-018-33	Mach. Screw 8-32 x 5/16 Phil. Pan Hd	2
14	WL-008-07	Lockwasher #8 Internal Shakeproof	2
15	NS-009-12	Nut 8-32 Hex	2
16	SC-018-31	Mach. Screw 8-32 x 3/8 Phil. Pan Hd	2
17	WL-008-07	Lockwasher #8 Internal Shakeproof	2
18	NS-009-12	Nut 8-32 Hex	2
19	WL-008-07	Lockwasher #8 Internal Shakeproof	2
20	NS-009-12	Nut 8-32 Hex	2
21	SC-018-33	Mach. Screw 8-32 x 5/16 Phil. Pan Hd	2
22	00-330963	Filter	1
23	00-044542	Holder - Fuse	1
24	SC-109-48	Mach. Screw 6-32 x 1/2 Phil. Flat Hd	4
25	WL-008-01	Lockwasher #6 Internal Shakeproof	4
26	NS-009-07	Nut 6-32 Hex	4
27	FE-022-28	Fuse (0.5 Amp.) (250 V.)	2
28	FE-014-19	Fuse (1.5 Amp.) (125 V.)	1
29	FE-017-03	Fuse (2 Amp.) (125 V.)	1
30	FE-014-19	Fuse (1.5 Amp.) (125 V.)	1
31	FE-022-28	Fuse (0.5 Amp.) (250 V.)	1
32	00-330917	Fuse (10 Amp.)	1
33	00-183839	Box Assy. Duplex Receptacle	1
34	00-130576-00001	Breaker - Circuit	1
35	SC-018-28	Mach. Screw 6-32 x 1/4 Phil. Pan Hd	2
36	WL-008-01	Lockwasher #6 Internal Shakeproof	2
37	00-175495-00001	Main Power Cable Assy	1
38	00-175470-00001	Motor Cable Assy	1
39	00-259994-00001	Right Cable Assy	1
40	00-259954	Power Supply Board Assy	1
41	00-258300-00003	Spacer 1/4 x 1/2	4
42	SC-018-28	Mach. Screw 6-32 x 1/4 Phil. Pan Hd	4
43	WL-008-01	Lockwasher #6 Internal Shakeproof	4
44	WS-028-06	Washer	4
45	00-259946-00001	Harness - Power Supply (P1)	1
46	FE-024-17	Fuse (0.5 Amp.)	1
47	00-259929-00001	Harness - Power Supply (P2)	1
48	00-183918	Block - Fuse	1
49	SC-109-48	Mach. Screw 6-32 x 1/2 Phil. Flat Hd	1
50	WL-008-01	Lockwasher #6 Internal Shakeproof	1
51	NS-009-07	Nut 6-32 Hex	1
52	FE-009-27	Fuse (2.0 Amp.) (250 V.)	1
53	00-257884	Holder - Fuse	1
54	FE-022-28	Fuse (0.5 Amp.) (250 V.)	1
55	00-330917	Fuse (10 Amp.)	1
	00-175977	Cover - Control Box	1
	SC-009-61	Mach. Screw 10-32 x 1 3/4 Rd. Hd. (For Cover)	2

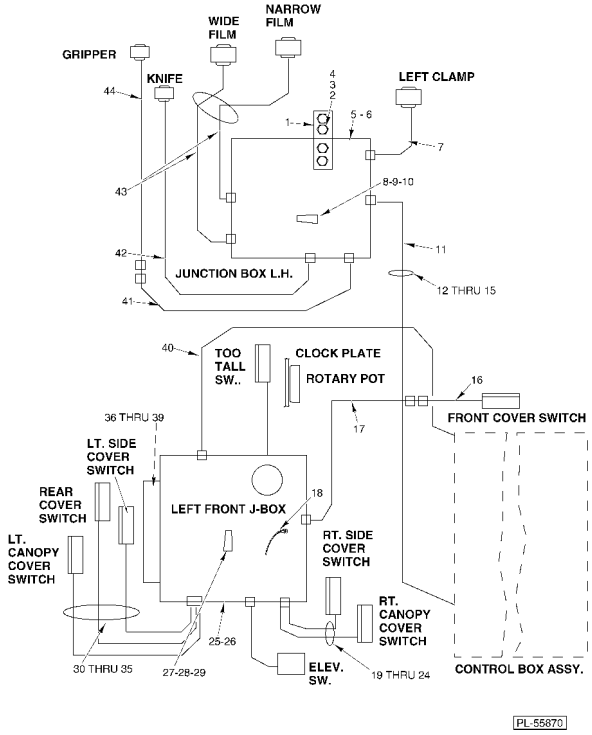

JUNCTION BOX (LH)

JUNCTION BOX (LH)

ILLUS. PL-55870	PART NO.	NAME OF PART	AMT.
1	00-175979	Bracket - J-Box Mounting	1
2	SC-118-19	Cap Screw 1/4-20 x 3/4 Hex Hd	4
3	WL-013-14	Lockwasher 1/4 Internal Shakeproof	4
4	NS-013-02	Nut 1/4-20 Hex	4
5	FE-004-16	Cover - Electrical	1
6	FE-013-11	Box - Conduit	1
7	00-047419	Solenoid DC	1
8	FE-006-29	Wire Nut (14-22 Ga.)	5
9	FE-006-17	Connector - Wire Nut (16-22 Ga.)	1
10	FE-006-18	Wire Nut (14-22 Ga.)	1
11	00-259993-00001	Left Cable Assy	1
12	00-332045	Clamp - Cable	1
13	SC-018-23	Mach. Screw 8-32 x 5/8 Phil. Pan Hd	1
14	NS-031-49	Stop Nut 10-32 Hex (SST)	1
15	WS-019-06	Washer	1
16	00-334716	Front Interlock Cable Assy	1
17	00-334719	Interlock Cable Assy	1
18	00-332114	Ground Wire (Field Box)	1
19	00-175998	Sensor - Switch	1
20	00-253363	Clamp	1
21	SC-018-37	Mach. Screw 8-32 x 3/4 Phil. Pan Hd	1
22	NS-009-12	Nut 8-32 Hex	1
23	WS-023-22	Washer (SST)	1
24	WL-008-07	Lockwasher #8 Internal Shakeproof	1
25	FE-004-16	Cover - Electrical	1
26	FE-013-11	Box - Conduit	1
27	FE-006-17	Connector - Wire Nut (16-22 Ga.)	9
28	FE-006-29	Wire Nut (14-22 Ga.)	1
29	FE-018-16	Wire Nut	2
30	00-253363	Clamp	1
31	SC-018-37	Mach. Screw 8-32 x 3/4 Phil. Pan Hd	1
32	NS-009-12	Nut 8-32 Hex	1
33	WS-023-22	Washer (SST)	1
34	WL-008-07	Lockwasher #8 Internal Shakeproof	1
35	00-175998	Sensor - Switch	1
36	00-175980	Bracket - J-Box Mounting	1
37	SC-118-19	Cap Screw 1/4-20 x 3/4 Hex Hd	3
38	WL-013-14	Lockwasher 1/4 Internal Shakeproof	3
39	NS-013-02	Nut 1/4-20 Hex	3
40	00-259998	Switch Sensing Cable Assy	1
41	00-049389	Gripper Cable Assy	1
42	00-175514	Wire (40 In. Lg.)	AR
43	00-175513	AC Solenoids Cable Assy	1
44	00-049390	Gripper Solenoid Assy	1
	00-183934-00003	Tube - Plastic Shrinkable 3/32 x 4 ft. (Cut to Length)	AR
	00-183934-00006	Tube - Plastic Shrinkable 1/4 x 4 Ft. (Cut to Length)	AR

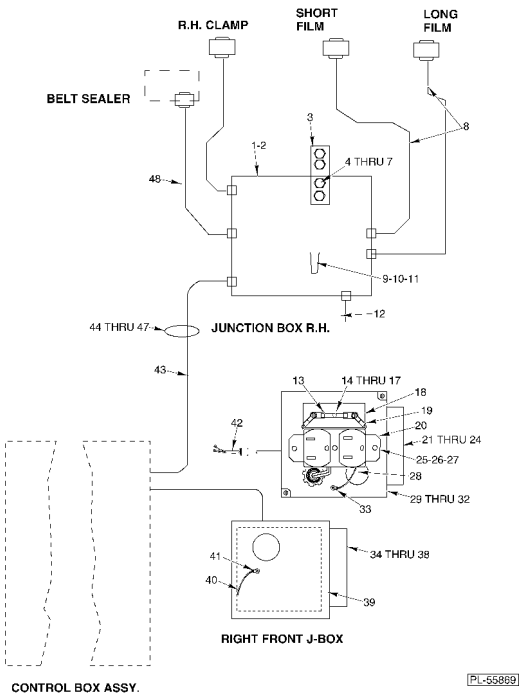

JUNCTION BOX (RH)

JUNCTION BOX (RH)

ILLUS. PL-55869	PART NO.	NAME OF PART	AMT.
1	FE-004-16	Cover - Electrical	1
2	FE-013-11	Box - Conduit	1
3	00-175979	Bracket - J-Box Mounting	1
4	SC-118-19	Cap Screw 1/4-20 x 3/4 Hex Hd	4
5	WL-003-38	Lockwasher 1/4 Helical	4
6	NS-013-02	Nut 1/4-20 Hex	4
7	WL-013-14	Lockwasher 1/4 Internal Shakeproof	4
8	00-175514	Wire (40 In. Lg.)	AR
9	FE-006-29	Wire Nut (14-22 Ga.)	6
10	FE-006-17	Connector - Wire Nut (16-22 Ga.)	1
11	FE-006-18	Wire Nut (14-22 Ga.)	1
12	00-043685	Heater Cable Assy. (To Heater Controller)	1
13	FE-017-03	Fuse (2 Amp.) (125 V.)	1
14	SC-109-48	Mach. Screw 6-32 x 1/2 Phil. Flat Hd	1
15	WL-008-02	Lockwasher #6 Internal Shakeproof	1
16	NS-009-07	Nut 6-32 Hex	1
17	WS-028-01	Washer	1
18	00-022376-00001	Holder - Fuse	1
19	00-183840	Duplex Receptable Wire Assy	1
20	FE-010-04	Receptacle - Electrical	1
21	00-175980	Bracket - J-Box Mounting	1
22	WL-013-14	Lockwasher 1/4 Internal Shakeproof	2
23	SC-118-19	Cap Screw 1/4-20 x 3/4 Hex Hd	2
24	NS-013-02	Nut 1/4-20 Hex	2
25	SC-109-48	Mach. Screw 6-32 x 1/2 Phil. Flat Hd	2
26	NS-009-07	Nut 6-32 Hex	2
27	WL-008-02	Lockwasher #6 Internal Shakeproof	2
28	00-334708	Wire - Ground	1
29	FE-003-17	Box - Conduit	1
30	00-183839	Duplex Receptacle Box Assy	1
31	FE-022-68	Cover - Electrical	1
32	00-334801	Label - AC Outlet	1
33	SD-024-38	Self-Tapping Screw 10-24 x 3/8 Phil. Pan Hd., Type TT	1
34	00-175980	Bracket - J-Box Mounting	1
35	SC-118-19	Cap Screw 1/4-20 x 3/4 Hex Hd	2
36	NS-013-02	Nut 1/4-20 Hex	2
37	WL-003-38	Lockwasher 1/4 Helical	2
38	WL-013-14	Lockwasher 1/4 Internal Shakeproof	2
39	FE-004-06	Cover - Electrical	1
40	00-332114	Ground Wire (Field Box)	1
41	SC-018-14	Mach. Screw 10-32 x 3/8 Slotted Pan Hd	1
42	00-183841	Duplex Receptable Cable Assy	1
43	00-259994-00001	Right Cable Assy	1
44	00-332045	Clamp - Cable	1
45	SC-018-23	Mach. Screw 8-32 x 5/8 Phil. Pan Hd	1
46	WS-019-06	Washer	1
47	NS-031-49	Stop Nut 10-32 Hex (SST)	1
48	00-175507	Sealer Belt Cable Assy	1

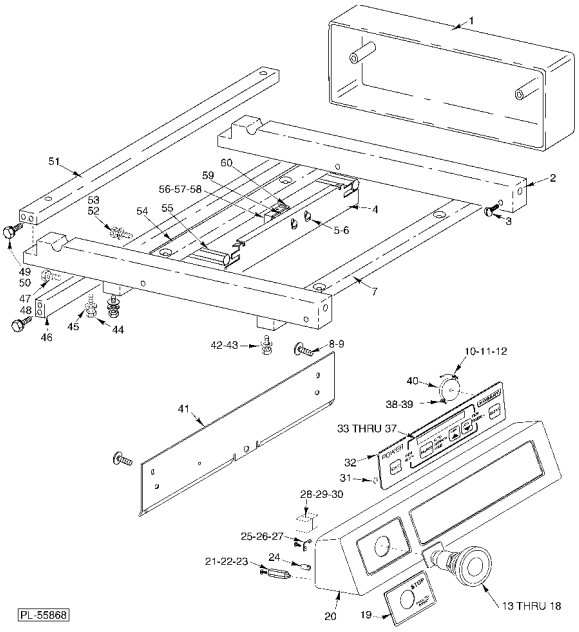

CONTROL PANEL

CONTROL PANEL

ILLUS. PL-55868	PART NO.	NAME OF PART	AMT.
1	00-175584	Cover - Control Panel	2
2	00-175919	Side - Scale Support	2
3	SC-022-73	Mach. Screw 8-32 x 3/4 Slotted Flat Hd. (SST)	4
4	00-183507	Plate - Height	1
5	SC-113-10	Mach. Screw 4-40 x 3/8 Phil. Pan Hd	4
6	WL-003-03	Lockwasher #4 Helical	1
7	00-043488	Bar - Front Tie	1
8	SC-062-07	Cap Screw 5/16-18 x 1/2 Hex Hd	2
9	WL-003-47	Lockwasher 5/16 Helical	2
10	00-183444	Ground Wire Assy	1
11	NS-009-02	Nut 4-40 Hex	1
12	WL-008-45	Lockwasher #4 Internal Shakeproof	1
13	00-334271	Push/Pull - Operator	1
14	FE-021-13	Bushing (Nylon) 1/2 I.D	1
15	00-183850	Stop/Start Cable Assy	1
16	00-030697	Clip - Cable 1/2	2
17	SC-008-09	Mach. Screw 10-24 x 3/8 Rd. Hd	2
18	WS-019-06	Washer	2
19	00-175574	Overlay - Stop Switch	1
20	00-175573	Cover - Control Panel	1
21	00-183398	Spacer - Control Panel	2
22	SC-018-14	Mach. Screw 10-32 x 3/8 Slotted Pan Hd	2
23	WL-004-40	Lockwasher 10 Helical	2
24	00-253123	Spacer - Display Board	4
25	00-183397	Bracket - Control Panel	2
26	SC-018-31	Mach. Screw 8-32 x 3/8 Phil. Pan Hd	2
27	WL-003-12	Lockwasher #8 Helical	2
28	00-183442	Stop/Start Wire Assy	1
29	00-334777	Block - Contact (KA3)	1
30	00-334778	Block - Contact (KA5)	1
31	RR-011-78	Retaining Ring	8
32	00-175738	Keyboard	1
33	00-183666	Display Assy	1
34	NS-009-02	Nut 4-40 Hex	4
35	WL-004-40	Lockwasher 10 Helical	2
36	SD-024-38	Self-Tapping Screw 10-24 x 3/8 Phil. Pan Hd., Type TT	2
37	00-259925	Display Cable Assy	1
38	NS-009-02	Nut 4-40 Hex	2
39	WL-008-45	Lockwasher #4 Internal Shakeproof	2
40	00-183421	Audio Indicator Assy	1
41	00-175922	Plate - Cover Control Panel	1
42	SC-118-15	Cap Screw 1/4-20 x 1 3/4 Hex Hd	4
43	WL-003-38	Lockwasher 1/4 Helical	4
44	SC-118-15	Cap Screw 1/4-20 x 1 3/4 Hex Hd	2
45	WL-003-38	Lockwasher 1/4 Helical	2
46	00-175921	Bar - Front Mounting Spacer	1
47	WL-003-38	Lockwasher 1/4 Helical	2
48	SC-118-17	Cap Screw 1/4-20 x 1-1/4 Hex Hd	2
49	SC-117-92	Cap Screw 5/16-18 x 3/4 Hex Hd	8
50	WL-003-47	Lockwasher 5/16 Helical	8
51	00-175915	Spacer - Rear Mounting Bar	1
52	WL-003-38	Lockwasher 1/4 Helical	2
53	SC-117-91	Cap Screw 1/4-20 x 1 Hex Hd	2
54	00-043489	Bar - Rear Tie	1
55	00-183509	Post - Height Switch	2

CONTROL PANEL

ILLUS. PL-55868	PART NO.	NAME OF PART	AMT.
56	00-175998	Sensor - Switch	1
57	00-175999	Actuator - Magnetic	1
58	00-183498	Cable Switch Assy. - Too Tall (Incls. Item 56)	1
59	00-183396	Plate - Screw Switch	2
60	00-183508	Bracket - Switch	1
	00-183934-00003	Tube - Plastic Shrinkable 3/32 x 4 ft. (Use W/Item 58 & Cut to Length)	AR
	00-183934-00006	Tube - Plastic Shrinkable 1/4 x 4 ft. (Use W/Item 58 & Cut to Length)	AR
	00-175572	Panel Assy. - Control (Incls. Items 10 thru 20, 24, & 28 thru 40)	AR

NOTES

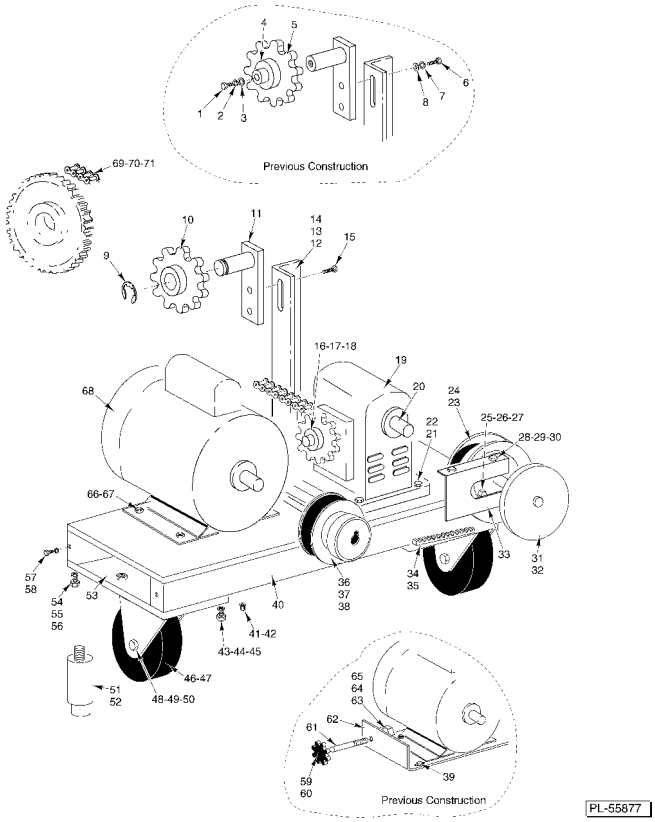

MOTOR AND CASTER

MOTOR AND CASTER

ILLUS. PL-55877	PART NO.	NAME OF PART	AMT.
1	SC-118-15	Cap Screw 1/4-20 x 13/4 Hex Hd	1
2	WL-013-14	Lockwasher 1/4 Internal Shakeproof	1
3	WS-017-25	Washer 1/4	1
4	00-086780	Bearing - Ball (S5KDD) FAFNIR	1
5	00-334479	Sprocket (14T)	1
6	SC-118-12	Cap Screw 3/8-16 x 3/4 Hex Hd	2
7	WL-004-06	Lockwasher 3/8 Helical	2
8	WS-018-22	Washer 3/8	2
9	RR-008-13	Retaining Ring	1
10	00-047818	Sprocket - Idler (15T)	1
11	00-047820	Take-Up Assy	1
12	00-047324	Plate Assy. - Chain Idler	1
13	SC-116-83	Cap Screw 3/8-16 x 1 1/2 Hex Hd	2
14	NS-038-10	Lock Nut 3/8-16 Special	2
15	SC-123-94	Cap Screw 3/8-16 x 3/4 Hex Washer Hd	2
16	00-333472	Sprocket - Reducer (26T)	1
17	SC-075-15	Set Screw 5/16-18 x 3/8 Hex Hdls., Cup Pt	2
18	00-087789	Key 3/16 x 1 Lg	1
19	00-175887	Reducer - Gear	1
20	00-087789	Key 3/16 x 1 Lg	1
21	SC-118-01	Cap Screw 3/8-24 x 1 1/4 Hex Hd	4
22	WL-004-06	Lockwasher 3/8 Helical	4
23	00-332367	Sheave - Speed Reducer (4.5 In. Dia.) (ML-44079 & ML-44088)	1
24	00-183740	Sheave - Reducer (6.5 In. Dia.) (ML-44047)	1
25	SC-068-30	Mach. Screw 10-32 x 5/8 Hex Hd	3
26	WL-004-40	Lockwasher 10 Helical	3
27	NS-009-30	Nut 10-32 Hex	3
28	SC-118-20	Cap Screw 1/4-20 x 1/2 Hex Hd	2
29	WL-003-38	Lockwasher 1/4 Helical	2
30	NS-013-02	Nut 1/4-20 Hex	2
31	00-046622	NLA - Obsolete--Handwheel Assy	1
32	SC-075-15	Set Screw 5/16-18 x 3/8 Hex Hdls., Cup Pt	2
33	00-046624	Cover - Belt & Pulley	1
34	00-128749	Belt - Drive (AX-26)	1
35	BV-013-26	V-Belt (A29) (ML-44047)	1
36	00-084717	Pulley - Variable	1
37	00-125162	Key 3/16 x 1 3/8 Lg	4
38	SC-047-75	Set Screw 1/4-20 x 1/4 Soc. Hdls., Cup Pt	1
39	00-332936	Screw - Motor Mounting	4
40	00-175872	Mounting Plate Assy	1
41	FE-006-29	Wire Nut (14-22 Ga.)	1
42	FE-006-17	Connector - Wire Nut (16-22 Ga.)	3
43	SC-041-50	Cap Screw 1/4-20 x 1/2 Hex Hd. (SST)	6
44	WS-017-25	Washer	6
45	WL-003-38	Lockwasher 1/4 Helical	6
46	00-044980	Caster	2
47	00-044981	Caster Swivel Lock	1
48	SC-118-10	Cap Screw 3/8-16 x 1 Hex Hd	8
49	WL-004-06	Lockwasher 3/8 Helical	8
50	NS-013-25	Nut 3/8-16 Hex	8
51	00-330866	Leg - Adjustable (4 In.)	4
52	00-049038	Leg - Adjustable (6 In.)	4
53	00-175673	Plate - Caster Mounting	1
54	SC-118-12	Cap Screw 3/8-16 x 3/4 Hex Hd	4
55	WL-004-06	Lockwasher 3/8 Helical	4

MOTOR AND CASTER

ILLUS. PL-55877	PART NO.	NAME OF PART	AMT.
56	NS-013-25	Nut 3/8-16 Hex	4
57	SC-118-12	Cap Screw 3/8-16 x 3/4 Hex Hd	4
58	WL-004-06	Lockwasher 3/8 Helical	4
59	00-129150	Wheel - Hand	1
60	SC-047-75	Set Screw 1/4-20 x 1/4 Soc. Hdls., Cup Pt	2
61	00-330067	Screw - Motor Adjusting	1
62	00-125806	Motor Base W/Screw & Washers	1
63	00-131842	Collar - Steel	1
64	SC-047-75	Set Screw 1/4-20 x 1/4 Soc. Hdls., Cup Pt	1
65	NS-013-33	Nut 1/2-13 Hex	1
66	SC-078-42	Bolt Sq. Neck 5/16-18 x 1 Rd	4
67	NS-038-11	Lock Nut 5/16-18 Special	4
68	00-046863	Motor (1/3 Hp., 50/60 Hz.)	1
69	00-046228	Chain Assy. - Main Drive	1
70	00-044784	Link - Connecting #40	1
71	00-044785	Link - Offset #40	1

NOTES

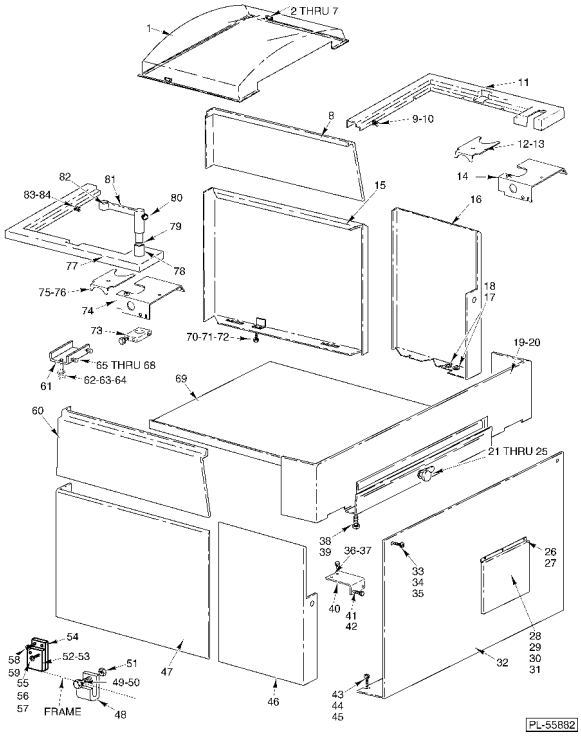
2 THRU 7
1
11
9-10
8
12-13
14
15
16
82
81
83-84
80
79
77
78
75-76
74
73
18
17
70-71-72
19-20
65 THRU 68
62-63-64
61
69
60
21 THRU 25
38
39
36-37
33
34
35
26
27
40
41
42
28
29
30
31
32
54
58
59
55
56
57
52-53
51
49-50
FRAME
48
47
46
43
44
45
PL-55882

PANELS

PANELS

ILLUS. PL-55882	PART NO.	NAME OF PART	AMT.
1	00-175468	Canopy	1
2	00-175999	Actuator - Magnetic	2
3	SC-018-51	Mach. Screw 4-40 x 5/8 Slotted Pan Hd	4
4	WL-003-03	Lockwasher #4 Helical	4
5	SC-113-10	Mach. Screw 4-40 x 3/8 Phil. Pan Hd	2
6	WL-003-03	Lockwasher #4 Helical	2
7	00-183396	Plate - Screw Switch	2
8	00-175476	Cover - Side (RH)	1
9	SC-066-20	Mach. Screw 10-32 x 1/2 Phil. Truss Hd. (SST)	5
10	WS-023-51	Washer	5
11	00-048281	Cover - Top (RH)	1
12	00-048275	Trim - Top Cover (RH)	1
13	SC-053-41	Mach. Screw 1/4-20 x 1/2 Slotted Truss Hd	1
14	00-048276	Bracket - Front Top Cover (RH)	1
15	00-183555	Panel - Right Side	1
16	00-175579	Panel - Front Right	1
17	FE-021-13	Bushing (Nylon) 1/2 I.D	1
18	FE-024-13	Bushing - Electrical 2 1/2 x 3/4 I.D	1
19	00-175583	Panel - Front Upper	1
20	00-175585	Door - Pan Access	1
21	00-128376	Latch - Door	1
22	00-183523	Hinge	1
23	00-175999	Actuator - Magnetic	1
24	SC-113-10	Mach. Screw 4-40 x 3/8 Phil. Pan Hd	2
25	WL-003-03	Lockwasher #4 Helical	2
26	SC-111-14	Mach. Screw 10-32 x 5/8 Pan Hd	3
27	NS-031-49	Stop Nut 10-32 Hex (SST)	3
28	00-334786	Breaker Door Assy. (6 3/4 x 7)	1
29	00-334785	Channel - Protector (6 1/4)	3
30	00-046634-00001	Breaker Door Assy. (8 3/4 x 8)	1
31	00-046625	Channel - Protector (7 1/4)	3
32	00-441773	Front Panel (ML-044047, ML-044079, & ML-044088)	1
33	SC-118-20	Cap Screw 1/4-20 x 1/2 Hex Hd	2
34	WL-003-38	Lockwasher 1/4 Helical	2
35	WS-017-25	Washer	2
36	SC-041-50	Cap Screw 1/4-20 x 1/2 Hex Hd. (SST)	4
37	WL-006-17	Lockwasher 1/4 Helical (SST)	4
38	SC-018-14	Mach. Screw 10-32 x 3/8 Slotted Pan Hd	5
39	NS-031-49	Stop Nut 10-32 Hex (SST)	2
40	00-183393	Bracket - Lower Front Panel	2
41	SC-041-50	Cap Screw 1/4-20 x 1/2 Hex Hd. (SST)	4
42	WL-006-17	Lockwasher 1/4 Helical (SST)	4
43	SC-041-50	Cap Screw 1/4-20 x 1/2 Hex Hd. (SST)	2
44	WS-017-25	Washer	2
45	WL-003-38	Lockwasher 1/4 Helical	2
46	00-175581	Panel - Front Left	1
47	00-183554	Panel - Left Side	1
48	00-183392	Bracket - Side Panel	4
49	SC-118-19	Cap Screw 1/4-20 x 3/4 Hex Hd	8
50	WL-003-38	Lockwasher 1/4 Helical	8
51	NS-013-02	Nut 1/4-20 Hex	8
52	00-175999	Actuator - Magnetic	2
53	00-175998	Sensor - Switch	1
54	00-183396	Plate - Screw Switch	1
55	SC-018-51	Mach. Screw 4-40 x 5/8 Slotted Pan Hd	2

PANELS

ILLUS. PL-55882	PART NO.	NAME OF PART	AMT.
56	WS-029-24	Washer	2
57	00-183396	Plate - Screw Switch	1
58	SC-113-10	Mach. Screw 4-40 x 3/8 Phil. Pan Hd	2
59	WL-003-03	Lockwasher #4 Helical	2
60	00-175477	Cover - Side (LH)	1
61	00-175704	Bracket - Cover Rear	2
62	SC-009-60	Mach. Screw 10-32 x 1-3/4 Slotted Rd. Hd	4
63	WL-004-40	Lockwasher 10 Helical	4
64	WS-019-06	Washer	4
65	SC-009-64	Mach. Screw 6-32 x 1 Slotted Rd. Hd	4
66	WL-003-09	Lockwasher #6 Helical	4
67	WS-028-20	Washer (SST)	4
68	NS-009-07	Nut 6-32 Hex	4
69	00-175571	Pan - Conveyor	1
70	SC-009-60	Mach. Screw 10-32 x 1-3/4 Slotted Rd. Hd	4
71	WL-004-40	Lockwasher 10 Helical	4
72	WS-019-06	Washer	4
73	00-175891	Block - Printer Pivot	2
74	00-048277	Bracket - Front Top Cover (LH)	1
75	00-048278	Trim - Top Cover (LH)	1
76	SC-053-41	Mach. Screw 1/4-20 x 1/2 Slotted Truss Hd	1
77	00-048282	Cover - Top (LH)	1
78	00-183588	Spacer - Printer Shaft	1
79	00-184345	Pivot - Printer Arm	1
80	00-183538	Knob - Film Centering	2
81	00-183931	Printer Pivot Arm Assy	1
82	00-175989	Printer Pivot Stud Assy	1
83	SC-066-20	Mach. Screw 10-32 x 1/2 Phil. Truss Hd. (SST)	5
84	WS-023-51	Washer	5
	00-183934-00003	Tube - Plastic Shrinkable 3/32 x 4 ft. (Cut to Length) (Use W/Item 57)	AR
	00-183934-00006	Tube - Plastic Shrinkable 1/4 x 4 ft. (Cut to Length) (Use W/Item 57)	AR
	00-334740	Logo Fastpak (Large)	2
	00-334741	Logo Fastpak (Small)	1

NOTES

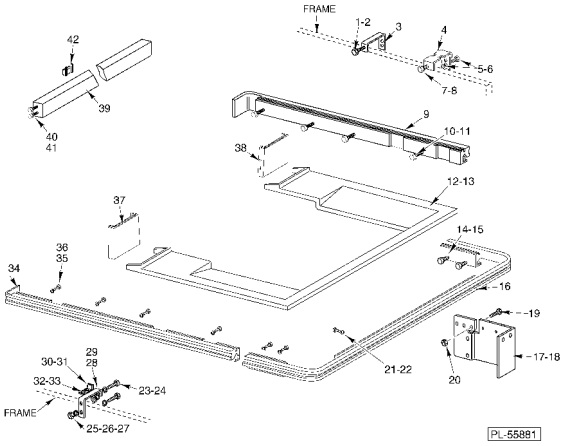

BANDS AND BRACKETS

BANDS AND BRACKETS

ILLUS. PL-55881	PART NO.	NAME OF PART	AMT.
1	SC-118-19	Cap Screw 1/4-20 x 3/4 Hex Hd	2
2	WL-003-38	Lockwasher 1/4 Helical	2
3	00-175686	Bracket - Side Cover	2
4	00-175687	Bracket - Front Top Cover	2
5	SC-118-19	Cap Screw 1/4-20 x 3/4 Hex Hd	2
6	WL-003-38	Lockwasher 1/4 Helical	2
7	SC-066-20	Mach. Screw 10-32 x 1/2 Phil. Truss Hd. (SST)	2
8	WS-023-51	Washer	2
9	00-175576	Band - Right Side	1
10	SC-117-91	Cap Screw 1/4-20 x 1 Hex Hd	4
11	WL-003-38	Lockwasher 1/4 Helical	4
12	00-048616	Cover - Intake	1
13	00-048630	Plug - Cover	2
14	SC-117-91	Cap Screw 1/4-20 x 1 Hex Hd	2
15	WL-003-38	Lockwasher 1/4 Helical	2
16	00-175575	Band - Front	1
17	00-047844	Bracket - Support (RH)	1
18	00-047843	Bracket - Support (LH)	1
19	SC-123-94	Cap Screw 3/8-16 x 3/4 Hex Wash Hd	2
20	NS-038-10	Lock Nut 3/8-16 Hex	2
21	SC-118-20	Cap Screw 1/4-20 x 1/2 Hex Hd	2
22	WL-003-38	Lockwasher 1/4 Helical	2
23	SC-113-10	Mach. Screw 4-40 x 3/8 Phil. Pan Hd	2
24	WL-003-03	Lockwasher #4 Helical	2
25	00-175686	Bracket - Side Cover	2
26	SC-118-19	Cap Screw 1/4-20 x 3/4 Hex Hd	4
27	WL-003-38	Lockwasher 1/4 Helical	4
28	00-183517	Bracket - Switch Canopy (RH)	1
29	00-183518	Bracket - Switch Canopy (LH)	1
30	00-175998	Sensor - Switch	2
31	00-183396	Plate - Screw Switch	2
32	SC-110-87	Mach. Screw 10-32 x 1/4 Phil. Pan Hd	4
33	WL-004-40	Lockwasher 10 Helical	4
34	00-175577	Band - Left Side	1
35	WL-003-38	Lockwasher 1/4 Helical	4
36	SC-117-91	Cap Screw 1/4-20 x 1 Hex Hd	4
37	00-175467	Cover - Face (LH)	1
38	00-175466	Cover - Face (RH)	1
39	00-175703	Bar - Cover Rear	1
40	SC-118-19	Cap Screw 1/4-20 x 3/4 Hex Hd	4
41	WL-003-38	Lockwasher 1/4 Helical	4
42	00-183888	Catch - Magnetic	1
	00-183934-00003	Tube - Shrinkable 3/32 x 4 ft. (Use W/Item 30 & Cut to Length)	AR
	00-183934-00006	Tube - Shrinkable 1/4 x 4 ft. (Use W/Item 30 & Cut to Length)	AR
	00-542689	Red Tape	AR
	00-438131-00005	Plate - Warning	1

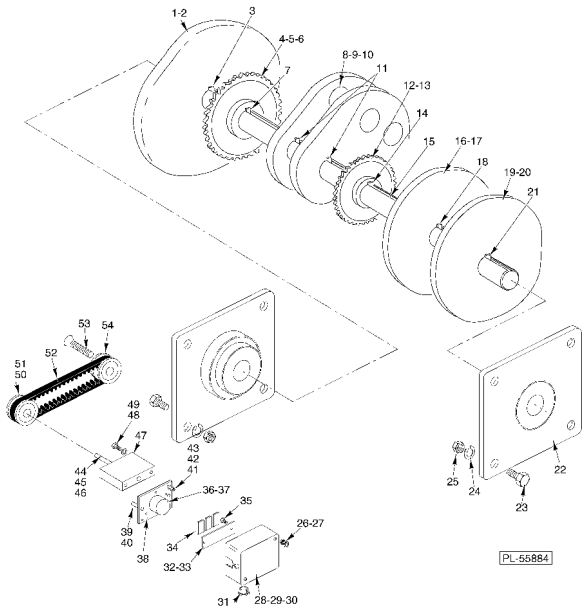

MAIN DRIVE SHAFT

MAIN DRIVE SHAFT

ILLUS. PL-55884	PART NO.	NAME OF PART	AMT.
1	00-175883	Cam - Output Lever	1
2	SC-047-41	Set Screw 3/8-16 x 3/8 Hex Hdls., Cup Pt.	2
3	KW-004-07	Key - Woodruff	1
4	00-184145	Sprocket - Intake	1
5	00-184144	Sprocket - Intake Split	AR
6	SC-047-41	Set Screw 3/8-16 x 3/8 Hex Hdls., Cup Pt.	2
7	KW-004-07	Key - Woodruff	1
8	00-184309	Cam	2
9	00-042384	Cam - Split	AR
10	SC-047-41	Set Screw 3/8-16 x 3/8 Hex Hdls., Cup Pt.	4
11	KW-004-07	Key - Woodruff	2
12	00-333551	Sprocket - Main Drive	1
13	SC-047-41	Set Screw 3/8-16 x 3/8 Hex Hdls., Cup Pt.	2
14	KW-004-07	Key - Woodruff	1
15	00-047461	Shaft - Main Drive	1
16	00-175882	Cam - Underfold	1
17	SC-047-41	Set Screw 3/8-16 x 3/8 Hex Hdls., Cup Pt.	2
18	KW-004-07	Key - Woodruff	1
19	00-333221	Cam - Side Clamp	1
20	SC-047-41	Set Screw 3/8-16 x 3/8 Hex Hdls., Cup Pt.	2
21	KW-004-07	Key - Woodruff	1
22	00-044230	Bearing - Flanged Ball	2
23	SC-117-97	Cap Screw 1/2-13 x 1 Hex Hd	8
24	WL-004-11	Lockwasher 1/2 Helical	8
25	NS-013-33	Nut 1/2-13 Hex	8
26	NS-009-12	Nut 8-32 Hex	2
27	WL-003-12	Lockwasher #8 Helical	2
28	00-334863	Cover - Clock	1
29	SC-008-09	Mach. Screw 10-24 x 3/8 Rd. Hd	4
30	WL-004-40	Lockwasher 10 Helical	4
31	FE-016-23	Bushing	1
32	00-334861	Support	1
33	00-334862	Spacer - Support	2
34	00-184350	Pad - Gripper	3
35	SC-121-75	Mach. Screw 8-32 x 1 1/2 Ful. Thd. Hex Hd	2
36	00-044672	Pot - Potentiometer (5K)	1
37	00-259996	Rotary Pot Cable Assy	1
38	00-175565	Plate - Clock	1
39	00-175568	Spacer - Clock	2
40	00-331207	Clip - Helipot	3
41	00-183404	Spacer - Clock Cover	1
42	SC-118-15	Cap Screw 1/4-20 x 1 3/4 Hex Hd	2
43	WL-013-14	Lockwasher 1/4 Internal Shakeproof	2
44	00-175564	Shaft - Clock	1
45	00-331350	Coupling - Flexible	1
46	RR-004-19	Retaining Ring	1
47	00-175569	Block & Bearing Assy	1
48	SC-118-12	Cap Screw 3/8-16 x 3/4 Hex Hd	2
49	WL-004-06	Lockwasher 3/8 Helical	2
50	00-175197	Pulley	1
51	SC-116-79	Set Screw 10-32 x 1/4 Soc. Hdls., Cup Pt.	2
52	00-175567	Belt - Timing (105T)	1
53	SC-061-09	Cap Screw 3/8-16 x 1 1/4 Flat Hd	1
54	00-175566	Pulley - Drive	1

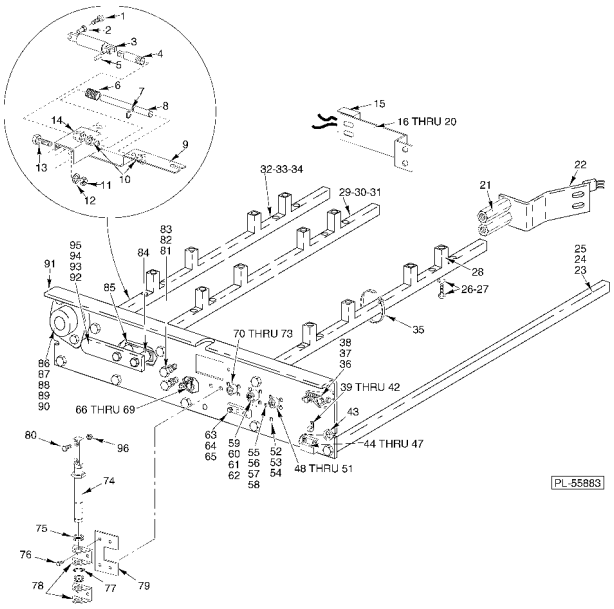

INTAKE
(LEFT SIDE)

INTAKE
(LEFT SIDE)

ILLUS. PL-55883	PART NO.	NAME OF PART	AMT.
1	SC-089-69	Cap Screw 10-32 x 1/2 Soc. Hex Hd	1
2	00-043059	Stud - Clutch	1
3	00-043060	Link - Clutch Positioner	1
4	00-043058	Adjuster - Clutch Positioner	1
5	RP-006-18	Roll Pin 1/4 Dia. x 3/4 (SST)	1
6	00-043061	Spring - Clutch Positioner	1
7	RR-010-12	Retaining Ring	1
8	00-043057	Shaft - Clutch Positioner	1
9	00-043056	Bracket - Mounting	1
10	00-043411	Bearing - Nyliner 1/2	2
11	NS-025-01	Nut - Crown 10-24	2
12	WS-003-49	Washer 0.266 x 0.563 x 0.062 (SST)	2
13	SC-041-20	Cap Screw 5/16-18 x 2 1/8 Hex Hd	2
14	NS-015-14	Nut 3/8-24 Hex	1
15	00-259892	Switch - Snap Action	1
16	00-334982	Bracket - Wide Pkg. Switch	1
17	SC-041-50	Cap Screw 1/4-20 x 1/2 Hex Hd. (SST)	2
18	WL-006-17	Lockwasher 1/4 Helical (SST)	2
19	NS-015-01	Nut 1/4-20 Hex	2
20	WS-003-49	Washer 0.266 x 0.563 x 0.062 (SST)	2
21	00-183506	Spacer - Wide Pkg	2
22	00-175799	Bracket - Wide Pkg. Switch	1
23	00-175754	Spacer Intake Conveyor	4
24	SC-041-50	Cap Screw 1/4-20 x 1/2 Hex Hd. (SST)	8
25	WL-006-17	Lockwasher 1/4 Helical (SST)	8
26	SC-041-02	Cap Screw 1/4-20 x 1 Hex Hd. (SST)	12
27	WL-006-17	Lockwasher 1/4 Helical (SST)	12
28	00-175758	Spacer - Intake Beds	12
29	00-175757	Bar - Support Front	2
30	SC-041-50	Cap Screw 1/4-20 x 1/2 Hex Hd. (SST)	4
31	WL-006-17	Lockwasher 1/4 Helical (SST)	4
32	00-175756	Bar - Support Rear	1
33	SC-041-50	Cap Screw 1/4-20 x 1/2 Hex Hd. (SST)	2
34	WL-006-17	Lockwasher 1/4 Helical (SST)	2
35	00-251199	Tie - Cable (4 In. Lg.)	5
36	SC-041-50	Cap Screw 1/4-20 x 1/2 Hex Hd. (SST)	2
37	WL-006-17	Lockwasher 1/4 Helical (SST)	2
38	WS-013-49	NLA - Obsolete--Washer	2
39	00-253363	Clamp	2
40	SC-021-89	Mach. Screw 8-32 x 5/8 Rd. Hd	2
41	WL-013-08	Lockwasher #8 Internal Shakeproof	2
42	NS-011-12	Stop Nut 8-32 (SST)	2
43	FE-016-23	Bushing	1
44	00-175998	Sensor - Switch	1
45	SC-109-66	Mach. Screw 4-40 x 3/8 Pan Hd	2
46	WL-013-02	Lockwasher #4 Internal Shakeproof (SST)	2
47	NS-011-01	Mach. Nut 4-40 Hex	2
48	00-334716	Front Interlock Cable Assy	1
49	SC-109-66	Mach. Screw 4-40 x 3/8 Pan Hd	4
50	WL-013-02	Lockwasher #4 Internal Shakeproof (SST)	4
51	NS-011-01	Mach. Nut 4-40 Hex	4
52	SC-041-50	Cap Screw 1/4-20 x 1/2 Hex Hd. (For Gound Wire)	1
53	WL-013-14	Lockwasher 1/4 Internal Shakeproof (For Ground Wire)	1
54	NS-015-01	Nut 1/4-20 Hex (SST) (For Gound Wire)	1
55	00-253363	Clamp	1

INTAKE
(LEFT SIDE)

ILLUS. PL-55883	PART NO.	NAME OF PART	AMT.
56	SC-120-35	Mach. Screw 8-32 x 3/8 Phil. Pan Hd	1
57	WL-013-08	Lockwasher #8 Internal Shakeproof	1
58	NS-011-12	Stop Nut 8-32 (SST)	1
59	00-259992	Intake Switch Assy	1
60	SC-109-66	Mach. Screw 4-40 x 3/8 Pan Hd	4
61	WL-013-02	Lockwasher #4 Internal Shakeproof (SST)	4
62	NS-011-01	Mach. Nut 4-40 Hex	4
63	00-175790	Block - Conveyor Mounting	2
64	SC-041-86	Cap Screw 1/4-20 x 3/8 Hex Hd. (SST)	4
65	WL-006-17	Lockwasher 1/4 Helical (SST)	4
66	00-086967	Clamp	2
67	SC-093-07	Mach. Screw 10-32 x 1/2 Slotted Pan Hd. (SST)	2
68	WL-006-07	Lockwasher #10 Helical (SST)	2
69	NS-011-23	Mach. Nut Hex 10-32 (SST)	2
70	00-175478	Clutch Cable Assy	1
71	SC-109-66	Mach. Screw 4-40 x 3/8 Pan Hd	4
72	WL-013-02	Lockwasher #4 Internal Shakeproof (SST)	4
73	NS-011-01	Mach. Nut 4-40 Hex	4
74	00-048429	Shaft - Pivot Package Guide	2
75	00-043411	Bearing - Nyliner 1/2	4
76	SC-121-61	Mach. Screw 1/4-20 x 5/8 Hex Hd	8
77	RR-004-05	Retaining Ring	2
78	00-044854	Bracket	4
79	00-044856	Centering Plate	2
80	SC-122-06	Bolt Sq. Neck 1/4-20 x 1 1/4 Hex Hd	4
81	SC-041-50	Cap Screw 1/4-20 x 1/2 Hex Hd. (SST)	2
82	WL-006-17	Lockwasher 1/4 Helical (SST)	2
83	NS-015-01	Nut 1/4-20 Hex	2
84	00-334774	Spacer - Chain Guide	2
85	00-175781	Plate - Guide Mounting	1
86	00-086774	Stamping	2
87	SC-109-47	Cap Screw 1/4-20 x 7/8 Hex Hd. (SST)	2
88	WL-006-17	Lockwasher 1/4 Helical (SST)	2
89	NS-015-01	Nut 1/4-20 Hex	2
90	00-131773	Bearing 1/2 Bore	1
91	00-175811	Frame - (LH)	1
92	00-175779	Guide - Chain	1
93	SC-041-34	Cap Screw 3/8-16 x 2 Hex Hd. (SST)	2
94	WS-018-22	Washer	2
95	WL-006-28	Lockwasher 3/8 Helical	2
96	NS-038-04	Lock Nut 1/4-20 Special	4
	00-183934-00003	Tube - Plastic 3/32 x 4 ft. (Use W/Item 48 & Cut to Length)	AR
	00-183934-00006	Tube - Plastic 1/4 x 4 ft. (Use W/Item 48 & Cut to Length)	AR
	00-043409	Kit - Clutch Positioner (Incls. Items 1 thru 14) (Use With Item 32)	AR

NOTES

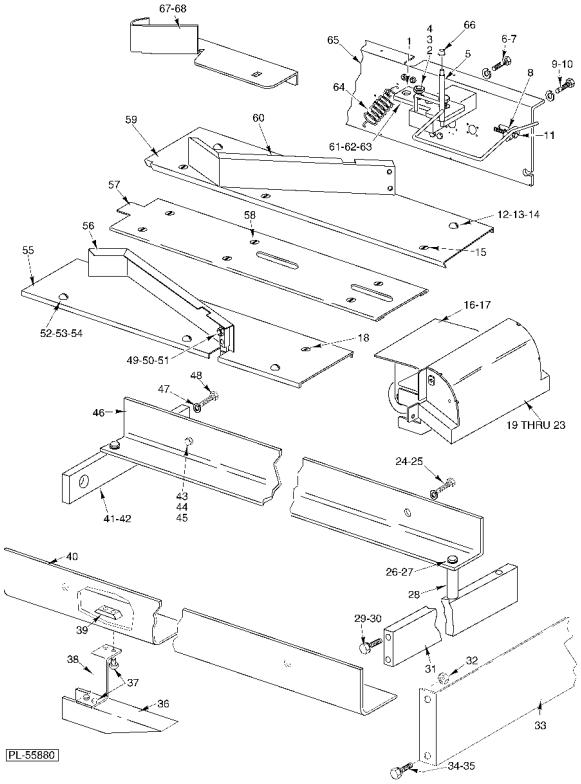

INTAKE
(TOP AND RIGHT SIDE)

INTAKE
(TOP AND RIGHT SIDE)

ILLUS. PL-55880	PART NO.	NAME OF PART	AMT.
1	00-175803	Plate - Pusher Switch	1
2	SC-111-15	Mach. Screw 6-32 x 5/8 Slotted Pan Hd	4
3	NS-011-07	Nut 6-32 Hex (SST)	4
4	WL-013-05	Lockwasher #6 Internal Shakeproof	12
5	00-175791	Actuator Assy. (Incls. Item 66)	1
6	SC-041-50	Cap Screw 1/4-20 x 1/2 Hex Hd. (SST)	2
7	WL-006-17	Lockwasher 1/4 Helical (SST)	2
8	00-175762	Stud - Take-Up	2
9	SC-041-50	Cap Screw 1/4-20 x 1/2 Hex Hd. (SST)	2
10	WL-006-17	Lockwasher 1/4 Helical (SST)	2
11	SC-112-31	Cap Screw 1/4-20 x 2 1/4 Hex Hd	2
12	SC-122-28	Bolt 10-24 x 1/2 Sq. Neck, Rd. Hd	3
13	WL-006-07	Lockwasher #10 Helical (SST)	3
14	NS-038-13	Nut - Lock 10-24	3
15	SC-022-08	Mach. Screw 8-32 x 3/8 Slotted Flat Hd. (SST)	3
16	00-175750	Guard - Intake Paddle	1
17	SC-047-75	Set Screw 1/4-20 x 1/4 Soc. Hdls., Cup Pt	2
18	SC-022-08	Mach. Screw 8-32 x 3/8 Slotted Flat Hd. (SST)	3
19	00-183516	Shield Assy	1
20	SC-122-29	Cap Screw 10-32 x 3/8 Socket Hex Hd	2
21	WL-006-07	Lockwasher #10 Helical (SST)	1
22	WS-019-06	Washer	1
23	SC-075-42	Set Screw 10-32 x 1/4 Soc. Hdls., Cup Pt	2
24	SC-041-50	Cap Screw 1/4-20 x 1/2 Hex Hd. (SST)	2
25	WL-006-17	Lockwasher 1/4 Helical (SST)	2
26	SC-117-92	Cap Screw 5/16-18 x 3/4 Hex Hd	2
27	WL-003-47	Lockwasher 5/16 Helical	2
28	00-175817	Spacer - Intake Angle	2
29	SC-117-92	Cap Screw 5/16-18 x 3/4 Hex Hd	2
30	WL-003-47	Lockwasher 5/16 Helical	2
31	00-175671	Bar - Front Conveyor Mounting	1
32	NS-015-01	Nut 1/4-20 Hex	4
33	00-184043	Cover - Front Intake	1
34	SC-041-50	Cap Screw 1/4-20 x 1/2 Hex Hd. (SST)	4
35	WL-006-17	Lockwasher 1/4 Helical (SST)	4
36	00-042901	Intake Drive Chain Cover Assy	1
37	SC-121-61	Mach. Screw 1/4-20 x 5/8 Hex Washer Hd., Whiz-Lock	4
38	00-042899	Bracket - Cover Mtg	1
39	00-042900	Bar - Bracket Mtg	1
40	00-175777	Angle - Intake (LH)	1
41	00-175697	Bar - Clamp Front Mounting	2
42	SC-047-72	Set Screw 1/4-20 x 3/8 Hex Hdls., Cup Pt	2
43	NS-013-02	Nut 1/4-20 Hex	2
44	WL-003-38	Lockwasher 1/4 Helical	2
45	SC-117-91	Cap Screw 1/4-20 x 1 Hex Hd	2
46	00-175778	Angle - Intake (RH)	1
47	WL-004-06	Lockwasher 3/8 Helical	2
48	SC-118-12	Cap Screw 3/8-16 x 3/4 Hex Hd	2
49	00-048429	Pivot - Shaft Pkg. Guide	2
50	SC-122-06	Bolt 1/4-20 x 1 1/4 Sq. Neck, Rd. Hd	4
51	NS-038-04	Nut - Lock 1/4-20	4
52	SC-122-28	Bolt 10-24 x 1/2 Sq. Neck, Rd. Hd	3
53	WL-006-07	Lockwasher #10 Helical (SST)	3
54	NS-038-13	Nut - Lock 10-24	3
55	00-175814	Bed - Conveyor (Left)	1

INTAKE
(TOP AND RIGHT SIDE)

ILLUS. PL-55880	PART NO.	NAME OF PART	AMT.
56	00-334925	Arm - Centering (LH) (35 In.)	1
57	00-184092	Cover - Center (35 In.)	1
58	SC-022-08	Mach. Screw 8-32 x 3/8 Slotted Flat Hd. (SST)	3
59	00-175813	Bed - Conveyor (Right)	1
60	00-334924	Arm - Centering (RH) (35 In.)	1
61	00-183765	Bearing - Nyliner	2
62	00-175804	Support - Pusher Switch	1
63	00-259892	Switch - Snap Action	1
64	00-175798	Spring - Pkg. Width	1
65	00-175809	Frame - (RH)	1
66	00-183765	Bearing - Nyliner	2
67	00-440606	Guide - (LH)	1
68	00-440607	Guide - (RH)	1

NOTES

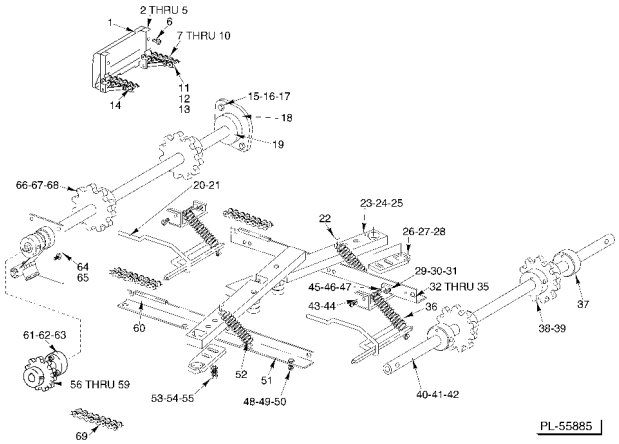

INTAKE
(LOWER PORTION)

INTAKE
(LOWER PORTION)

ILLUS. PL-55885	PART NO.	NAME OF PART	AMT.
1	00-175763	Pusher - Pkg	2
2	00-175768	Pusher Arm & Link Assy. (Incls. Items 3, 4, & 5)	2
3	00-175775	Link - Pusher	2
4	RP-002-01	Roll Pin 5/32 Dia. x 3/8 Lg	1
5	00-184618	Arm - Pusher	2
6	SC-022-68	Mach. Screw 10-32 x 5/8 Slotted Flat Hd. (SST)	4
7	00-044787	Intake Chain Assy. (RH) (Incls. Items 2 & 8 thru 13)	1
8	00-044789	Chain - Intake (1.5 In.)	4
9	00-044790	Chain - Intake (31.5 In.)	4
10	00-175770	Spacer - Pusher Arm	4
11	00-044791	Link - Double Connecting	8
12	00-175771	Spacer - Pusher Link	4
13	00-044792	Plate - Connecting Link #40	4
14	00-044786	Intake Chain Assy. (LH) (Incls. Items 2 & 8 thru 13)	1
15	SC-109-47	Cap Screw 1/4-20 x 7/8 Hex Hd. (SST)	2
16	WL-006-17	Lockwasher 1/4 Helical (SST)	2
17	NS-015-01	Nut 1/4-20 Hex	2
18	00-086774	Flange - Stamping	2
19	00-086773	Bearing 5/8 Bore	1
20	00-334961	Switch Actuator Assy	2
21	00-183399	Bushing - Nyliner	4
22	PG-011-15	Groove Pin 3/16	2
23	00-183693	Roller Assy	2
24	00-044700	Lever Assy	2
25	RR-010-06	Retaining Ring	4
26	00-184046	Plate - Adjusting	2
27	SC-047-75	Set Screw 1/4-20 x 1/4 Soc. Hdls., Cup Pt	2
28	KW-003-03	Key - Woodruff 1/8 x 1/2 Lg	2
29	SC-122-29	Cap Screw 10-32 x 3/8 Socket Hex Hd	2
30	WS-030-53	Washer (SST)	2
31	WL-013-11	Lockwasher #10 Internal Shakeproof	2
32	00-175786	Rail - Chain Support (RH)	1
33	SC-041-02	Cap Screw 1/4-20 x 1 Hex Hd. (SST)	2
34	WL-006-17	Lockwasher 1/4 Helical (SST)	2
35	NS-015-01	Nut 1/4-20 Hex	2
36	00-175797	Spring - Intake Switch	2
37	00-183589	Hub - Shield	2
38	00-184601	Sprocket Assy. (15T)	2
39	RR-007-20	Retaining Ring	2
40	00-175755	Shaft - Idler Sprocket	1
41	SC-041-50	Cap Screw 1/4-20 x 1/2 Hex Hd. (SST)	2
42	WL-006-17	Lockwasher 1/4 Helical (SST)	2
43	00-334971	Bracket - Switch	2
44	00-259892	Switch - Snap Action	2
45	SC-122-30	Cap Screw 10-32 x 1 Socket Hex Hd	5
46	WL-013-11	Lockwasher #10 Internal Shakeproof	2
47	WS-030-53	Washer (SST)	2
48	SC-041-02	Cap Screw 1/4-20 x 1 Hex Hd. (SST)	2
49	WL-006-17	Lockwasher 1/4 Helical (SST)	2
50	NS-015-01	Nut 1/4-20 Hex	2
51	00-175785	Rail - Chain Support (LH)	1
52	00-175798	Spring - Pkg. Width	2
53	SC-041-50	Cap Screw 1/4-20 x 1/2 Hex Hd. (SST)	4
54	WL-006-17	Lockwasher 1/4 Helical (SST)	4
55	WS-003-49	Washer 0.266 x 0.563 x 0.062 (SST)	4

INTAKE
(LOWER PORTION)

ILLUS. PL-55885	PART NO.	NAME OF PART	AMT.
56	00-046226	Torque Limiter Assy	1
57	00-131773	Bearing - Collar (1/2 In.)	1
58	SC-047-75	Set Screw 1/4-20 x 1/4 Soc. Hdls., Cup Pt	1
59	KW-003-03	Key - Woodruff 1/8 x 1/2 Lg	1
60	00-048090-00005	Guide - Chain	2
61	00-183900	Shaft - Clutch Drive Stubshaft	1
62	SC-089-70	Cap Screw 10-32 x 5/8 Soc. Hex Hd	3
63	WL-006-07	Lockwasher #10 Helical (SST)	3
64	00-334775	Shaft & Clutch Assy. (Incls. Solenoid)	1
65	00-043055	Coil Kit (Incls. Solenoid, Spring, Plunger, & Hardware)	1
66	00-175818	Sprocket (17T)	2
67	KW-003-10	Key - 606 Woodruff	2
68	SC-047-75	Set Screw 1/4-20 x 1/4 Soc. Hdls., Cup Pt	2
69	00-049885	Chain - Intake Drive	1

NOTES

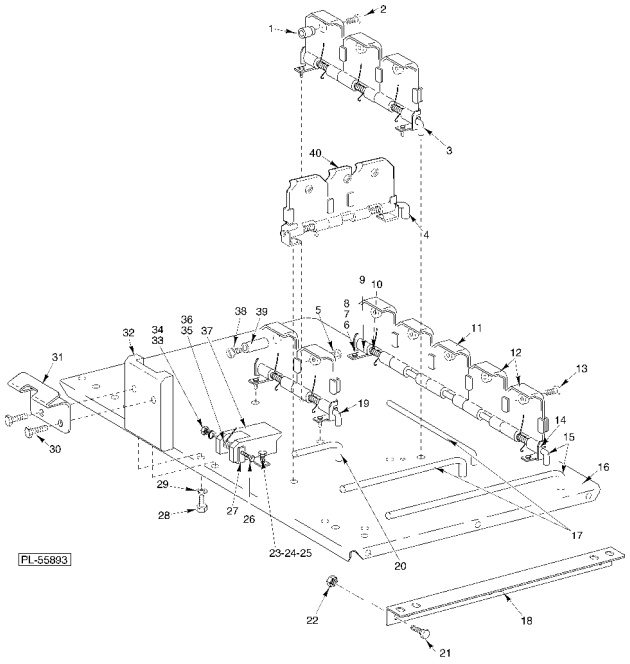

ELEVATOR PLATFORM

ELEVATOR PLATFORM

ILLUS. PL-55893	PART NO.	NAME OF PART	AMT.
1	00-334983	Spacer - Elevator	2
2	SC-093-21	Mach. Screw 10-32 x 3/8 Pan Hd. (SST)	2
3	00-333328	Rod - Elevator (#3 Front)	1
4	00-041512	Shaft - Slat	2
5	SC-093-21	Mach. Screw 10-32 x 3/8 Pan Hd. (SST)	4
6	SC-116-32	Cap Screw 10-32 x 3/8 Hex Hd. (SST)	24
7	WL-006-07	Lockwasher #10 Helical (SST)	26
8	NS-011-23	Mach. Nut Hex 10-32 (SST)	26
9	00-332213	Bracket - (RH) Stop	12
10	00-333147	Spring - Slat (Torsion)	23
11	00-334067	Slat - Smooth	1
12	00-334066	Slat - Elevator	1
13	SC-093-21	Mach. Screw 10-32 x 3/8 Pan Hd. (SST)	2
14	00-332212	Bracket - (LH) Stop	12
15	00-332216	Rod - Elevator (#1 Front)	3
16	00-183853	Platform - Elevator	1
17	00-332219	Rod - Elevator (#2 Front)	3
18	00-441117	Bracket - Slat Extension	2
19	00-332214	Rod - Elevator (#4 Front)	1
20	00-332215	Rod - Elevator (Side)	2
21	SC-067-07	Mach. Screw 10-24 x 1/2 Hex Hd. (SST)	6
22	NS-038-13	Lock Nut 10-24	6
23	SC-116-32	Cap Screw 10-32 x 3/8 Hex Hd. (SST)	2
24	WL-006-07	Lockwasher #10 Helical (SST)	2
25	NS-011-23	Mach. Nut Hex 10-32 (SST)	2
26	SC-116-30	Mach. Screw 6-32 x 1 1/4 Hex Hd. (SST)	1
27	00-331291	Bracket - Elevator Latch	1
28	SC-067-07	Mach. Screw 10-24 x 1/2 Hex Hd. (SST)	2
29	WL-006-07	Lockwasher #10 Helical (SST)	2
30	SC-112-03	Mach. Screw 10-24 x 1/2 Pan Hd	2
31	00-184078	Support - Elevator Pkg	1
32	00-044502	Post - Elevator	1
33	WL-006-42	Lockwasher #6 Medium	1
34	NS-011-07	Nut 6-32 Hex (SST)	1
35	00-331285	Sleeve - Elevator Latch	1
36	00-331288	Spring - Latch Torsion	1
37	00-331284	Latch - Elevator Platform	1
38	SC-093-21	Mach. Screw 10-32 x 3/8 Pan Hd. (SST)	4
39	00-332912	Spacer	5
40	00-334940	Slat - Elevator (Half)	1
	00-183745	Elevator Assy. (Incls. Items 1 thru 17, 19 thru 40)	1
	00-184142	Styrene Kit (Incls. Spacers, Standoffs, Washers, Springs, & Screws)	1

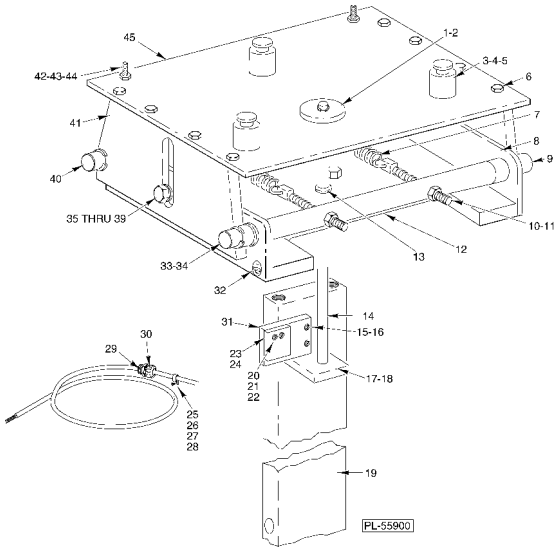

ELEVATOR SUPPORT

ELEVATOR SUPPORT

ILLUS. PL-55900	PART NO.	NAME OF PART	AMT.
1	WS-022-33	Washer	2
2	RR-004-26	Retaining Ring	2
3	00-330310	Stud - Elevator	3
4	SC-118-20	Cap Screw 1/4-20 x 1/2 Hex Hd	3
5	WL-006-17	Lockwasher 1/4 Helical (SST)	3
6	SD-024-18	Self-Tapping Screw 10-24 x 1/2 Hex Hd., Type TT	8
7	00-044622	Spring - Breakdown Elevator	2
8	00-334157	Plate - Retaining	2
9	00-334049	Shaft - Locating	1
10	00-334201	Nut - Adjusting	2
11	00-334202	Hook - Spring	2
12	00-183747	Plate & Bushing Assy. (Incls. Item 13)	1
13	00-334046	Bushing	1
14	00-334048	Plunger	1
15	SC-009-64	Mach. Screw 6-32 x 1 Slotted Rd. Hd	2
16	WL-006-42	Lockwasher #6 Medium	2
17	00-183738	Plate - Switch Actuator	1
18	SC-055-01	Set Screw 10-24 x 1/4 Hex Hdls., Cup Pt. (SST)	1
19	00-175586	Support - Elevator	1
20	SC-009-85	Mach. Screw 6-32 x 1-1/4 Slotted Rd. Hd	2
21	WL-006-42	Lockwasher #6 Medium	2
22	WS-023-01	Washer (SST)	2
23	00-334728	Switch Assy	1
24	00-334727	Cord Assy	1
25	00-086967	Clamp	1
26	SC-009-85	Mach. Screw 6-32 x 1-1/4 Slotted Rd. Hd	1
27	WS-023-01	Washer (SST)	1
28	WL-006-42	Lockwasher #6 Medium	1
29	FE-006-07	Lock Nut 1/2 (Use W/Cord Assy.)	1
30	FE-022-84	Relief - Strain (Use W/Cord Assy.)	1
31	00-334729	Plate - Switch	1
32	SD-024-16	Self-Tapping Screw 10-24 x 1/2 Phil. Flat Hd., Type TT	8
33	00-334050	Bushing - Slide	4
34	RR-004-03	Retaining Ring	4
35	SC-117-91	Cap Screw 1/4-20 x 1 Hex Hd	2
36	NS-015-01	Nut 1/4-20 Hex	2
37	WL-006-17	Lockwasher 1/4 Helical (SST)	2
38	00-334060	Spacer	2
39	WS-022-10	Washer	2
40	00-334110	Shaft - Adjusting	1
41	00-334286	Support	2
42	SC-118-18	Cap Screw 1/4-20 x 7/8 Hex Hd	2
43	WL-006-17	Lockwasher 1/4 Helical (SST)	2
44	NS-015-01	Nut 1/4-20 Hex	2
45	00-334160	Plate - Top Support	1

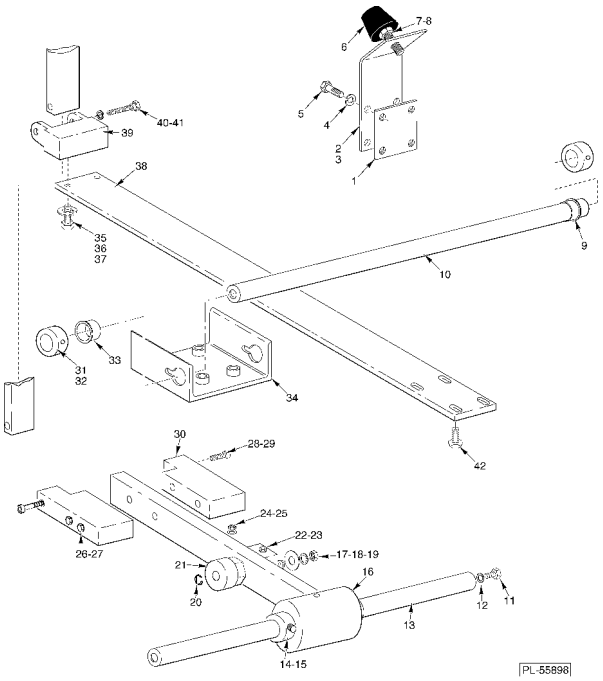

ELEVATOR LEVER

ELEVATOR LEVER

ILLUS. PL-55898	PART NO.	NAME OF PART	AMT.
1	00-049465	Plate - Clamp	1
2	00-049464	Bracket - Elevator Bumper (Clamp on only)	1
3	00-049457	Bracket - Elevator Bumper (Bolt on only)	1
4	WL-003-47	Lockwasher 5/16 Helical	4
5	SC-037-68	Cap Screw 5/16-18 x 1-1/2 Hex Hd	4
6	00-049458	Bumper - Elevator	1
7	NS-013-14	Nut 5/16-18 Hex	1
8	WL-003-47	Lockwasher 5/16 Helical	1
9	00-334921	Bearing - Nyliner	1
10	00-175972	Shaft - Underfolder Drive	1
11	SC-118-12	Cap Screw 3/8-16 x 3/4 Hex Hd	2
12	WL-004-06	Lockwasher 3/8 Helical	2
13	00-175865	Shaft - Elevator	2
14	00-131841	Collar 1 5/8 Dia	2
15	SC-075-15	Set Screw 5/16-18 x 3/8 Hex Hdls., Cup Pt	2
16	00-175866	Elevator Lever Assy	1
17	NS-013-36	Nut 1/4-20 Hex	1
18	WL-004-11	Lockwasher 1/2 Helical	1
19	WS-020-06	Washer	1
20	RR-010-17	Retaining Ring	1
21	00-086782	Bearing - Fafnir	1
22	00-125665	Bolt 1/4-28 UNF-2A x 2 1/4 Hex Hd., Special	1
23	00-330340	Cam - Roller Stud	1
24	NS-032-39	Nut 1/4-28 Hex	1
25	WL-003-38	Lockwasher 1/4 Helical	1
26	SC-097-11	Cap Screw 5/16-18 x 4 Hex Hd	2
27	WL-003-47	Lockwasher 5/16 Helical	2
28	SC-104-08	Shoulder Screw 5/16-18 x 3/4 Hex Soc. Hd	2
29	WS-018-24	Washer	2
30	00-175871	Lower Elevator Clevis Assy	2
31	00-131841	Collar 1 5/8 Dia	2
32	SC-075-15	Set Screw 5/16-18 x 3/8 Hex Hdls., Cup Pt	2
33	00-334921	Bearing - Nyliner	1
34	00-047842	Bracket - Bearing (LH)	1
35	SC-118-11	Cap Screw 3/8-16 x 7/8 Hex Hd	2
36	WL-004-06	Lockwasher 3/8 Helical	2
37	NS-009-43	Nut 3/8-16 Hex	2
38	00-334918	Lever - Elevator Upper	1
39	00-330820	Elevator Clevis Assy	1
40	SC-104-08	Shoulder Screw 5/16-18 x 3/4 Hex Soc. Hd	2
41	WS-018-24	Washer	2
42	SC-123-94	Cap Screw 3/8-16 x 3/4 Hex Washer Hd	4
	00-049466	Kit - Elevator Bumper Assy. (Incls. Items 1, 2, & 4 thru 8)	1

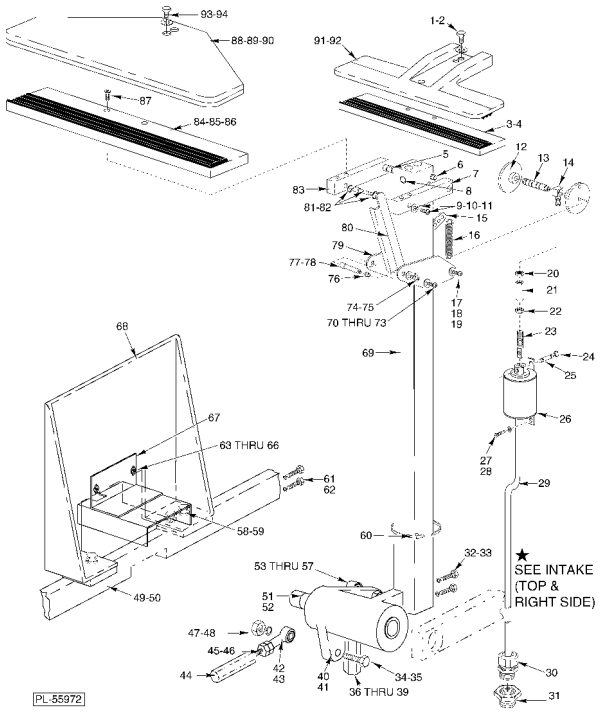
93-94
88-89-90
87
84-85-86
1-2
91-92
3-4
12
13
14
5
6
7
8
83
81-82
9-10-11
15
16
80
79
77-78
76
74-75
70 THRU 73
17
18
19
20
21
22
23
24
25
26
27
28
29
68
67
63 THRU 66
61
62
58-59
49-50
69
60
32-33
53 THRU 57
51
52
47-48
45-46
44
42
43
40
41
36 THRU 39
34-35
30
31
★
SEE INTAKE
(TOP &
RIGHT SIDE)
PL-55972

SIDE CLAMP

SIDE CLAMP

ILLUS. PL-55972	PART NO.	NAME OF PART	AMT.
1	SC-118-19	Cap Screw 1/4-20 x 3/4 Hex Hd	2
2	WL-003-38	Lockwasher 1/4 Helical	2
3	00-333517	Pad - Lower	1
4	00-333273	Plate - Lower	1
5	00-175942	Shaft - Pivot Clamp	1
6	00-183399	Bushing - Nyliner	2
7	00-175940	Plate - Clamp Pivot (RH)	1
8	SC-047-72	Set Screw 1/4-20 x 3/8 Hex Hdls., Cup Pt	1
9	SC-113-37	Mach. Screw 6-32 x 5/8 Phil. Pan Hd	2
10	WS-023-15	Washer	2
11	WL-003-09	Lockwasher #6 Helical	2
12	00-441581	Stop	2
13	00-175945	Shaft - Pivot Tenon	1
14	00-183429	Block (LH)	1
15	00-441582	Spring Mounting Bracket	2
16	00-175798	Spring - Linkage Clamp	1
17	SC-018-29	Mach. Screw 6-32 x 3/8 Phil. Pan Hd	2
18	WL-003-09	Lockwasher #6 Helical	2
19	WS-023-15	Washer	2
20	NS-013-08	Nut 1/4-28 (LH Thread)	1
21	00-330070	Block - Take Up	1
22	NS-013-07	Nut 1/4-28 Hex (RH Thread)	1
23	00-175944	Pin - Threaded Solenoid	1
24	RR-004-23	Retaining Ring	2
25	00-175936	Pin - Rod	1
26	00-047419	Solenoid DC	1
27	SC-118-20	Cap Screw 1/4-20 x 1/2 Hex Hd	2
28	WL-003-38	Lockwasher 1/4 Helical	2
29	00-334724	Tubing Vinyl Extruded	1
30	FE-024-21	Strain Relief - Electrical	1
31	FE-006-07	Lock Nut 1/2 (Cnd.)	1
32	SC-118-19	Cap Screw 1/4-20 x 3/4 Hex Hd	2
33	WL-003-38	Lockwasher 1/4 Helical	2
34	SC-116-83	Cap Screw 3/8-16 x 1 1/2 Hex Hd	1
35	WL-004-06	Lockwasher 3/8 Helical	1
36	00-130312	Spacer	1
37	SC-118-08	Cap Screw 3/8-16 x 1-3/4 Hex Hd	1
38	WS-018-22	Washer	1
39	WL-004-06	Lockwasher 3/8 Helical	1
40	00-333277	Base Clamp Assy. (RH)	1
41	00-183833	Base Clamp Assy. (LH)	1
42	00-334055	Bearing - RH Thread	1
43	00-334056	Bearing - LH Thread	1
44	00-175947	Link Assy. - Cross (Incls. Item 40, 41, 43, & 44)	1
45	NS-013-27	Nut 3/8-24 Hex (RH Thread)	1
46	NS-013-28	Nut 3/8-24 Hex (LH Thread)	1
47	NS-013-25	Nut 3/8-16 Hex	1
48	WS-018-22	Washer	1
49	00-175701	Bar - Pivot Side Clamp	1
50	SC-047-72	Set Screw 1/4-20 x 3/8 Hex Hdls., Cup Pt	4
51	00-175677	Shaft - Film Clamps	2
52	00-175678	Spacer - Pivot Side Clamp	4
53	00-333427	Side Clamp Link Assy. - Vertical	1
54	SC-116-83	Cap Screw 3/8-16 x 1 1/2 Hex Hd	3
55	WS-018-22	Washer	3

SIDE CLAMP

ILLUS. PL-55972	PART NO.	NAME OF PART	AMT.
56	NS-013-25	Nut 3/8-16 Hex	3
57	WL-004-06	Lockwasher 3/8 Helical	3
58	SC-118-20	Cap Screw 1/4-20 x 1/2 Hex Hd	4
59	WL-003-38	Lockwasher 1/4 Helical	4
60	00-255502	Tie - Cable Locking	1
61	SC-118-11	Cap Screw 3/8-16 x 7/8 Hex Hd	4
62	WL-004-06	Lockwasher 3/8 Helical	4
63	SC-116-32	Cap Screw 10-32 x 3/8 Hex Hd. (SST)	2
64	WL-004-40	Lockwasher 10 Helical	2
65	WS-023-51	Washer	2
66	NS-009-22	Nut 10-24 Hex	2
67	00-042763	Shield - Knife Solenoid	1
68	00-184873	Stop - Pkg	1
69	00-044779	Arm - Side Clamp	1
70	SC-018-29	Mach. Screw 6-32 x 3/8 Phil. Pan Hd	2
71	WL-003-09	Lockwasher #6 Helical	2
72	00-183399	Bushing - Nyliner	2
73	00-175945	Shaft - Pivot Tenon	1
74	SC-018-29	Mach. Screw 6-32 x 3/8 Phil. Pan Hd	2
75	WL-003-09	Lockwasher #6 Helical	2
76	00-175560	Bushing - Nyliner	2
77	00-175945	Shaft - Pivot Tenon	1
78	RR-010-06	Retaining Ring	2
79	00-044665	Plate - Pivot Scissors	2
80	00-175939	Link - Scissors	1
81	RR-010-06	Retaining Ring	2
82	00-175945	Shaft - Pivot Tenon	1
83	00-175941	Plate - Clamp Pivot (LH)	1
84	00-042226	Plate - Lower	1
85	00-043441	Pad - Lower	1
86	00-043446	Lower Assy. (Incls. Items 88 & 89)	1
87	SC-014-92	Mach. Screw 10-32 x 1/2 Slotted Flat Hd	4
88	00-042227	Clamp - Upper	1
89	00-043440	Pad - Upper Clamp	1
90	00-043445	Top Clamp Assy. (Incls. Items 91 & 92)	1
91	00-334209	Clamp - Upper	1
92	00-183708	Pad - Upper Clamp	1
93	SC-118-19	Cap Screw 1/4-20 x 3/4 Hex Hd	2
94	WL-003-38	Lockwasher 1/4 Helical	2

NOTES

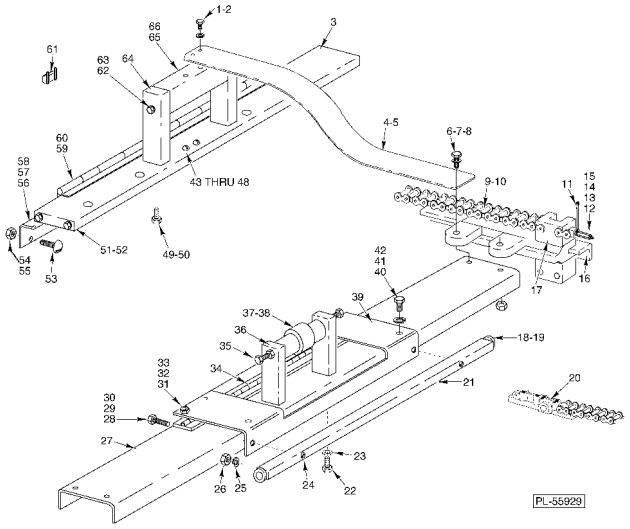

UPPER PUSHER

UPPER PUSHER

ILLUS. PL-55929	PART NO.	NAME OF PART	AMT.
1	SC-118-20	Cap Screw 1/4-20 x 1/2 Hex Hd	2
2	WL-003-38	Lockwasher 1/4 Helical	2
3	00-032931	Bar - Underfolder	1
4	00-043871	Pkg. Hold Down	1
5	00-043455	Pad - Hold Down	2
6	SC-118-17	Cap Screw 1/4-20 x 1-1/4 Hex Hd	2
7	WL-003-38	Lockwasher 1/4 Helical	2
8	NS-013-02	Nut 1/4-20 Hex	2
9	00-046696	Chain - Gripper (Rear)	1
10	00-044784	Link - Connecting	5
11	00-183458	Ground Wire Assy	1
12	00-330069	Chain Take-Up Assy	1
13	WL-013-14	Lockwasher 1/4 Internal Shakeproof	1
14	00-044785	Link - Offset 340	1
15	00-046698	Chain - Gripper (Front)	1
16	00-175683	Rail - Film Support	1
17	00-175899	Slide - Pusher	1
18	00-333376	Roller - Deflector	2
19	RR-004-03	Retaining Ring	2
20	00-440591	Block - Gripper Slide	2
21	00-175903	Bar - Pusher Lift	1
22	SC-118-20	Cap Screw 1/4-20 x 1/2 Hex Hd	2
23	WL-003-38	Lockwasher 1/4 Helical	2
24	SC-013-66	Mach. Screw 10-32 x 7/8 Slotted Flat Hd	2
25	WL-006-07	Lockwasher #10 Helical (SST)	2
26	NS-011-23	Mach. Nut Hex 10-32 (SST)	2
27	00-047420	Channel - Pusher	1
28	SC-116-32	Cap Screw 10-32 x 3/8 Hex Hd. (SST)	5
29	WL-006-07	Lockwasher #10 Helical (SST)	5
30	NS-011-23	Mach. Nut Hex 10-32 (SST)	5
31	NS-011-23	Mach. Nut Hex 10-32 (SST)	4
32	SC-116-32	Cap Screw 10-32 x 3/8 Hex Hd. (SST)	4
33	WL-006-07	Lockwasher #10 Helical (SST)	4
34	00-175901	Hinge - Pusher	1
35	SC-118-15	Cap Screw 1/4-20 x 1 3/4 Hex Hd	2
36	00-175905	Block - Roller Mounting	2
37	00-042428	NLA - Obsolete--Roller - Hold Down	1
38	00-175906	NLA - Obsolete--Spacer - Roller	1
39	00-032973	Plate - Pusher	1
40	NS-015-01	Nut - Hex 1/4-20 (SST)	4
41	SC-041-01	Cap Screw 1/4-20 x 3/4 Hex Hd	2
42	WL-006-17	Lock Washer - 1/4 Helical	2
43	SC-081-18	Mach. Screw 10-32 x 1 1/8 Rd. Hd	2
44	WL-004-40	Lockwasher 10 Helical	2
45	WS-019-06	Washer	2
46	NS-009-30	Nut 10-32 Hex	2
47	00-175999	Actuator - Magnetic	1
48	00-175998	Sensor - Switch	1
49	SC-036-40	Cap Screw 5/16-18 x 1-1/4 Hex Hd	2
50	WL-003-47	Lockwasher 5/16 Helical	2
51	SC-118-12	Cap Screw 3/8-16 x 3/4 Hex Hd	4
52	WL-004-06	Lockwasher 3/8 Helical	4
53	SC-113-10	Mach. Screw 4-40 x 3/8 Phil. Pan Hd	2
54	WL-003-03	Lockwasher #4 Helical	2
55	00-183396	Plate - Screw Switch	2

UPPER PUSHER

ILLUS. PL-55929	PART NO.	NAME OF PART	AMT.
56	00-183521	Shield - Rear	1
57	00-183520	Bracket - Rear Shield	1
58	00-183961	Label - Instruction	1
59	00-175776	Hinge - Door & Shield	1
60	SC-018-14	Mach. Screw 10-32 x 3/8 Slotted Pan Hd	2
61	00-183888	Catch - Magnetic	1
62	SC-117-91	Cap Screw 1/4-20 x 1 Hex Hd	2
63	WL-003-38	Lockwasher 1/4 Helical	2
64	00-175910	Support - Hold Down Pivot	2
65	00-175909	Pivot - Hold Down	1
66	00-175911	Block - Hold Down Pivot	1
	00-183934-00003	Tube - Plastic Shrinkable 3/32 x 4 ft. (Use W/Item 51 & Cut to Length)	AR
	00-183934-00006	Tube - Plastic Shrinkable 1/4 x 4 ft. (Use W/Item 51 & Cut to Length)	AR
	00-046690	Gripper Chain Assy. (RH) (Incls. Items 9 thru 15, 17, & 70)	1
	00-046689	Gripper Chain Assy. (LH) (Incls. Items 9, 10, 11, 14, 15, 17, & 70)	1

NOTES

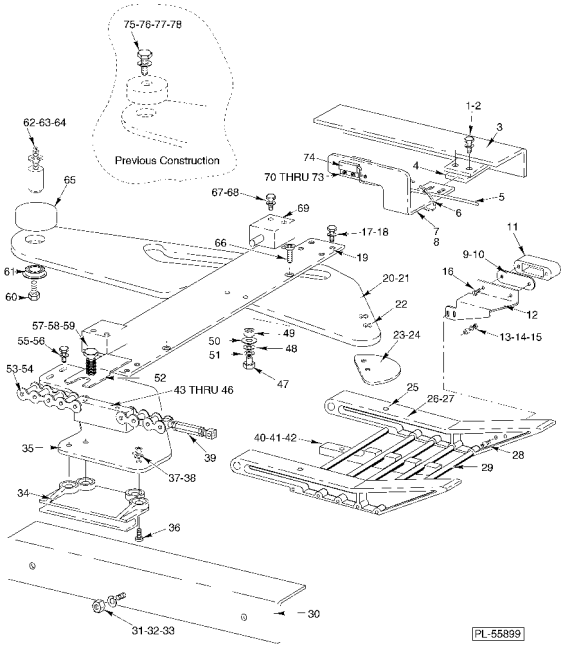

UNDERFOLDER

UNDERFOLDER

ILLUS. PL-55899	PART NO.	NAME OF PART	AMT.
1	SC-018-51	Mach. Screw 4-40 x 5/8 Slotted Pan Hd.	4
2	WL-008-45	Lockwasher #4 Internal Shakeproof	4
3	00-183824	Rail & Plate Assy.	1
4	00-183396	Plate - Screw	1
5	00-531816	Tube - Shrinkable (3/16 x 3 1/2 In. Lg.)	1
6	00-031355	Tie - Cable	1
7	00-043864	Bracket - Switch	1
8	00-043951	Reed Switch Assy. (Incls. Items 5, 6, 7, 70 thru 74)	1
9	00-119300	Gasket - Magnet Retainer	1
10	00-288454-00002	Retainer - Magnet	1
11	00-119057	Magnet	1
12	00-043886	Bracket - Magnet	1
13	NS-048-19	Nut Assy. 10-32 Keps	2
14	WS-029-79	Washer (SST)	2
15	00-183548	Spacer - Solenoid Link	2
16	SD-009-41	Self-Tapping Screw 8-32 x 3/8 Phil. Pan Hd., Type F	2
17	SC-118-20	Cap Screw 1/4-20 x 1/2 Hex Hd.	4
18	WL-003-38	Lockwasher 1/4 Helical	4
19	00-175964	Bar - Underfolder	1
20	00-183834	Underfolder - Side	2
21	00-042366	Underfolder - Side (For 15 In. Trays)	2
22	SC-022-16	Mach. Screw 10-24 x 5/16 Slotted Flat Hd. (SST)	4
23	00-043419	Extension - Underfolder Right	1
24	00-043418	Extension - Underfolder Left	1
25	SC-122-80	Set Screw 1/4-20 x 1/2 Hex Hdls., Cup Pt.	2
26	00-044136	Ramp - Pusher	2
27	00-044137	Ramp Assy. (Incls. Items 9 thru 16, 25, 26, & 28)	1
28	SC-059-17	Cap Screw 10-32 x 3/4 Soc. Hd.	2
29	00-175966	Roller - Underfolder	5
30	00-175683	Rail - Film Support	2
31	NS-013-02	Nut 1/4-20 Hex	6
32	WL-003-38	Lockwasher 1/4 Helical	6
33	SC-118-19	Cap Screw 1/4-20 x 3/4 Hex Hd.	6
34	00-175962	Slide - Underfolder	2
35	00-175963	Plate - Underfolder	2
36	SC-022-35	Mach. Screw 1/4-20 x 1 Slotted Flat Hd. (SST)	2
37	WL-003-38	Lockwasher 1/4 Helical	2
38	NS-013-02	Nut 1/4-20 Hex	2
39	00-330069	Chain Take-Up Assy.	8
40	00-441797	Block - Deflector	1
41	SC-009-41	Mach. Screw 1/4-20 x 3/8 Rd. Hd.	2
42	WL-008-17	Lockwasher 1/4 Internal Shakeproof	2
43	00-175970	Block - Chain Underfolder	2
44	SC-118-19	Cap Screw 1/4-20 x 3/4 Hex Hd.	2
45	WL-003-38	Lockwasher 1/4 Helical	2
46	WS-017-25	Washer	2
47	00-043825	Stud - Underfolder	2
48	00-333208	Washer	2
49	00-127559	Bearing	2
50	00-043849	Washer - Slide	2
51	WS-018-34	Washer - Shim (0.110)	2
52	00-183831	Clip - Spring	2
53	00-046692	Underfolder Chain Assy.	2
54	00-044784	Link - Connecting	4
55	SC-110-12	Cap Screw 1/4-20 x 5/8 Hex Hd.	2

UNDERFOLDER

ILLUS. PL-55899	PART NO.	NAME OF PART	AMT.
56	WL-003-38	Lockwasher 1/4 Helical	2
57	00-183830	Stud - Spring Clip	2
58	00-333492	Spring - Underfolder	2
59	WL-003-38	Lockwasher 1/4 Helical	2
60	SC-110-12	Cap Screw 1/4-20 x 5/8 Hex Hd	2
61	00-086789	Bearing - Flanged	2
62	00-044879	Stud - Underfolder Threaded	2
63	WL-006-28	Lockwasher 3/8	2
64	NS-015-14	Nut 3/8-24 Hex	2
65	00-184560	Bearing	2
66	SC-118-13	Cap Screw 1/4-28 x 3/4 Flat Hd	2
67	SC-110-31	Mach. Screw 10-24 x 3/4 Hex Hd	4
68	WL-006-07	Lockwasher #10 Helical (SST)	4
69	00-175960	Underfolder Pivot Block Assy	2
70	SC-018-51	Mach. Screw 4-40 x 5/8 Slotted Pan Hd	3
71	WL-008-45	Lockwasher #4 Internal Shakeproof	3
72	NS-009-45	Nut 4-40 Hex	4
73	WS-029-24	Washer	6
74	00-175998	Sensor	2
75	00-184819	Stud - Underfolder Rear	2
76	WL-003-38	Lockwasher 1/4 Helical	2
77	SC-118-17	Cap Screw 1/4-20 x 1-1/4 Hex Hd	2
78	00-044879	Stud - Underfold Rear	2

NOTES

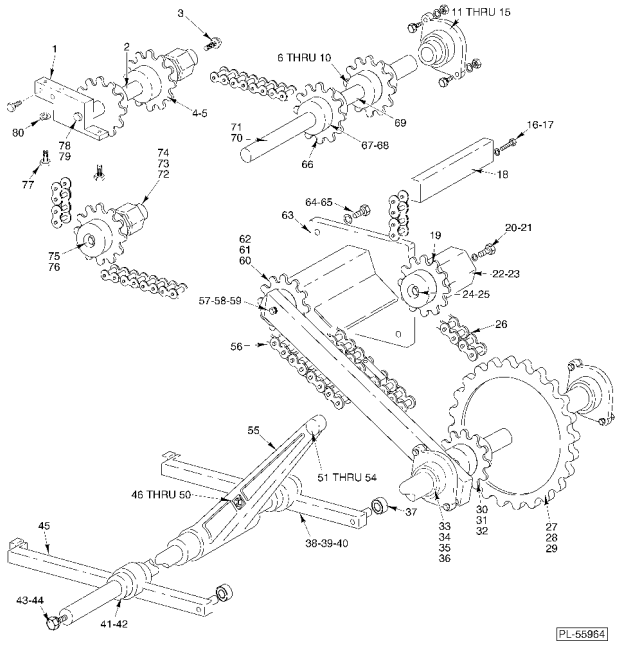

CHAIN AND SPROCKETS

CHAIN AND SPROCKETS

ILLUS. PL-55964	PART NO.	NAME OF PART	AMT.
1	00-044162	Block - Idler Support	2
2	00-049629	Stud Assy	4
3	SC-123-94	Cap Screw 3/8-16 x 3/4 Hex Washer Hd	2
4	00-047830	Sprocket Assy	4
5	RR-008-13	Retaining Ring	6
6	00-047823	Spacer - Sprocket	2
7	00-087789	Key 3/16 x 1 Lg	AR
8	SC-047-72	Set Screw 1/4-20 x 3/8 Hex Hdls., Cup Pt	2
9	00-175694	Sprocket - Gripper	2
10	KW-003-10	Key - Woodruff	AR
11	00-086776	Flange - Stamping	4
12	00-175997	Bearing - Ball	2
13	SC-120-38	Cap Screw 5/16-18 x 1 Hex Hd	4
14	WL-003-47	Lockwasher 5/16 Helical	4
15	NS-013-14	Nut 5/16-18 Hex	4
16	SC-118-20	Cap Screw 1/4-20 x 1/2 Hex Hd	4
17	WL-003-38	Lockwasher 1/4 Helical	4
18	00-175684	Bar - Intake Support	2
19	00-184601	Sprocket Assy. (15T)	6
20	SC-118-12	Cap Screw 3/8-16 x 3/4 Hex Hd	6
21	WL-004-06	Lockwasher 3/8 Helical	6
22	00-175698	Stud - Idler Underfolder	4
23	00-175705	Bushing - Idler	4
24	SC-118-12	Cap Screw 3/8-16 x 3/4 Hex Hd	6
25	WL-004-06	Lockwasher 3/8 Helical	6
26	00-049885	Conveyor Chain Drive Assy	1
27	00-175881	Sprocket - Underfolder	2
28	SC-075-15	Set Screw 5/16-18 x 3/8 Hex Hdls., Cup Pt	1
29	KW-003-17	Key - Woodruff	1
30	00-175955	Sprocket - Underfolder	1
31	KW-003-17	Key - Woodruff	3
32	SC-047-72	Set Screw 1/4-20 x 3/8 Hex Hdls,. Cup Pt	2
33	00-175994	Bearing - Ball	3
34	SC-117-92	Cap Screw 5/16-18 x 3/4 Hex Hd	4
35	WL-003-47	Lockwasher 5/16 Helical	4
36	NS-013-14	Nut 5/16-18 Hex	4
37	00-086782	Bearing - Fafnir (W203PP) (Cam Follower)	2
38	00-330139	Stud - Cam Bearing	1
39	00-175820	Lever - Assy	1
40	RR-010-17	Retaining Ring	2
41	00-131841	Collar 1 5/8 Dia	6
42	SC-075-15	Set Screw 5/16-18 x 3/8 Hex Hdls., Cup Pt	2
43	SC-118-11	Cap Screw 3/8-16 x 7/8 Hex Hd	2
44	WL-004-06	Lockwasher 3/8 Helical	2
45	00-175820	Lever Assy	2
46	00-175954	Stud - Bearing	1
47	00-086782	Bearing - Fafnir	1
48	WL-004-11	Lockwasher 1/2 Helical	1
49	NS-013-36	Nut 1/4-20 Hex	1
50	RR-010-17	Retaining Ring	2
51	00-175950	Underfolder Lever Assy. (Incls. Items 44 thru 48)	1
52	00-183703	Spacer - Underfolder Lever	1
53	SC-116-83	Cap Screw 3/8-16 x 1 1/2 Hex Hd	1
54	WL-004-06	Lockwasher 3/8 Helical	1
55	WS-018-24	Washer	1

CHAIN AND SPROCKETS

ILLUS. PL-55964	PART NO.	NAME OF PART	AMT.
56	00-046691	Underfolder Drive Chain Assy	1
57	00-175956	Support - Chain	1
58	SC-117-92	Cap Screw 5/16-18 x 3/4 Hex Hd	1
59	WL-003-47	Lockwasher 5/16 Helical	1
60	00-334481	Sprocket (21T)	1
61	00-086780	Bearing - Ball (S5KDD) Fafnir	2
62	RR-008-14	Retaining Ring	2
63	00-175679	Plate & Stud Assy	1
64	SC-118-12	Cap Screw 3/8-16 x 3/4 Hex Hd	4
65	WL-004-06	Lockwasher 3/8 Helical	4
66	00-047817	Idler Sprocket (17T)	2
67	SC-047-32	Set Screw 5/16-18 x 5/16 Soc. Hdls., Cup Pt	2
68	00-131691	Collar	2
69	00-047823	Spacer - Sprocket	2
70	00-047827	Shaft - Gripper Drive	3
71	KW-003-10	Key - Woodruff	1
72	00-184601	Sprocket Assy. (15T)	2
73	00-183546	Stud - Idler Underfolder Top	2
74	00-175705	Bushing - Idler	2
75	SC-118-12	Cap Screw 3/8-16 x 3/4 Hex Hd	4
76	WL-008-27	Lockwasher 3/8 Internal Shakeproof	2
77	SC-116-83	Cap Screw 3/8-16 x 1 1/2 Hex Hd	2
78	SC-120-38	Cap Screw 5/16-18 x 1 Hex Hd	2
79	WL-003-47	Lockwasher 5/16 Helical	2
80	WL-004-06	Lockwasher 3/8 Helical	2

NOTES

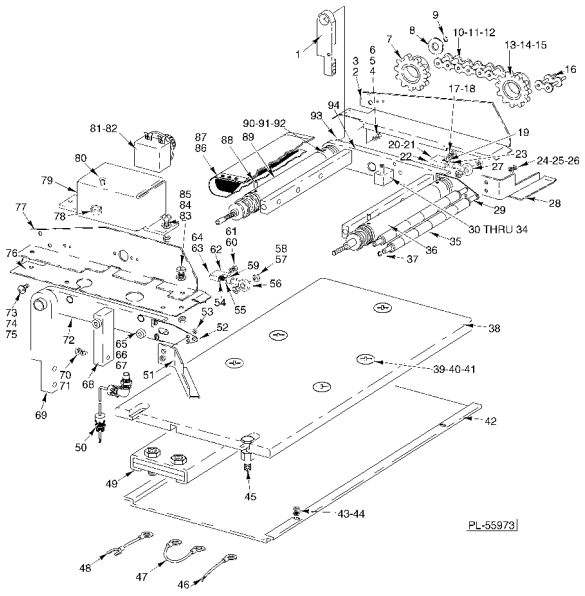
1
2
3
4
5
6
7
8
9
10-11-12
13-14-15
16
17-18
19
20-21
22
23
24-25-26
27
28
29
30 THRU 34
35
36
37
38
39-40-41
42
43-44
45
46
47
48
49
50
51
52
53
54
55
56
57
58
59
60
61
62
63
64
65
66
67
68
69
70
71
72
73
74
75
76
77
78
79
80
81-82
83
84
85
86
87
88
89
90-91-92
93
94
PL-55973

BELT SEALER

BELT SEALER

ILLUS. PL-55973	PART NO.	NAME OF PART	AMT.
1	00-041948	Support - Sealer	1
2	00-043691-00001	Cover - Hotplate	1
3	00-043490-00001	Cover - Hotplate (LH)	1
4	SC-113-08	Mach. Screw 10-32 x 1/2 Phil. Pan Hd	4
5	WL-004-40	Lockwasher 10 Helical	4
6	WS-023-20	Washer	2
7	00-175523	Clutch & Sprocket Assy	1
8	00-175536	Bearing - Thrust	1
9	RR-004-05	Retaining Ring	1
10	00-087165	Link - Chain Connector	1
11	00-048300	Chain - Hotplate Drive (Without Transfer Station)	1
12	00-043495	Chain Assy. Drive (With Transfer Station)	1
13	00-043928	Sprocket - Split (20T) (Service Only)	1
14	00-087789	Key 3/16 x 1 Lg	1
15	SC-047-72	Set Screw 1/4-20 x 3/8 Hex Hdls., Cup Pt	1
16	00-041395	Link - Double (Included in Item 13)	1
17	SC-090-37	Cap Screw 3/8-24 x 1 Hex Hd	3
18	WL-004-06	Lockwasher 3/8 Helical	3
19	00-333492	Spring	1
20	RR-004-19	Retaining Ring	1
21	00-175552	Stud	1
22	00-175550	Guide Block Assy	1
23	NS-017-20	Nut - Jam 3/8-24	1
24	SC-059-29	Cap Screw 1/4-20 x 1/2 Soc. Hd	6
25	WL-006-17	Lockwasher 1/4 Helical (SST)	6
26	NS-013-02	Nut 1/4-20 Hex	4
27	00-334055	Bearing RH Thread	1
28	00-440500-00002	Brace - Sealer (LH)	1
29	00-183674	Shaft - Discharge Roller	2
30	00-175555	Spacer - Hotplate Center	1
31	SC-037-85	Cap Screw 5/16-18 x 1 Hex Hd	1
32	WL-003-47	Lockwasher 5/16 Helical	1
33	00-175521	Spacer - Hotplate	1
34	SC-027-39	NLA - Obsolete--Mach. Screw 1/4-20 x 1 1/4 Flat Hd	1
35	00-183675	Roller - Discharge	16
36	00-175526	Idler Roller & Shaft Assy	1
37	RR-004-05	Retaining Ring	4
38	00-183957	Hotplate	1
39	SC-029-47	Mach. Screw 5/16 x 1 Flat Hd. (Brass)	4
40	WL-003-47	Lockwasher 5/16 Helical	4
41	NS-014-11	Nut 5/16-18 Hex (Brass)	4
42	00-175561	Cover - Hotplate Bottom	1
43	SC-113-08	Mach. Screw 10-32 x 1/2 Phil. Pan Hd	4
44	WL-004-40	Lockwasher 10 Helical	4
45	00-175522	Stud - Spacer	2
46	00-175986	Element Wire Assy	2
47	00-183764	Jumper Wire Assy	1
48	00-175985	Element Wire Assy	1
49	00-087017	Plate - Element	2
50	00-175507	Sealer Belt Cable Assy	1
51	00-440500-00001	Brace - Sealer (RH)	1
52	00-044252	Plate - Roller Mounting	2
53	NS-013-02	Nut 1/4-20 Hex	2
54	WS-029-35	Washer	1
55	00-333492	Spring	1

BELT SEALER

ILLUS. PL-55973	PART NO.	NAME OF PART	AMT.
56	00-334055	Bearing RH Thread	1
57	NS-017-20	Jam Nut 3/8-24 Hex	2
58	WL-004-06	Lockwasher 3/8 Helical	2
59	NS-017-20	Jam Nut 3/8-24 Hex	1
60	SC-117-91	Cap Screw 1/4-20 x 1 Hex Hd	2
61	WL-003-38	Lockwasher 1/4 Helical	2
62	00-175550	Guide Block Assy	1
63	00-175552	Stud	1
64	RR-004-19	Retaining Ring	1
65	SC-089-70	Cap Screw 10-32 x 5/8 Soc. Hex Hd	4
66	WL-004-40	Lockwasher 10 Helical	4
67	WS-023-20	Washer	4
68	00-175537	Block - Sealer Mounting	2
69	00-175562	Support - Sealer	1
70	SC-089-04	Cap Screw 1/4-20 x 1 Soc. Hex Hd	2
71	WL-006-17	Lockwasher 1/4 Helical (SST)	2
72	00-175541	Frame Assy. (RH) (Incls. Bearing)	1
73	WL-004-40	Lockwasher 10 Helical	2
74	SC-113-08	Mach. Screw 10-32 x 1/2 Phil. Pan Hd	2
75	WS-023-20	Washer	2
76	00-175559	Cover - Hotplate (RH)	1
77	00-042536	Shield - Thermostat	1
78	FE-021-13	Bushing (Nylon) 1/2 I.D	1
79	00-175538	Box - Thermostat	1
80	FE-006-29	Wire Nut (14-22 Ga.)	1
81	00-044352	Thermostat	1
82	SC-009-70	Mach. Screw 6-32 x 1/4 Slotted Rd. Hd	2
83	SC-113-08	Mach. Screw 10-32 x 1/2 Phil. Pan Hd	4
84	WL-004-40	Lockwasher 10 Helical	4
85	NS-009-30	Nut 10-32 Hex	4
86	00-440757	Belt - Hotplate	1
87	00-048674	Pin - Belt Splicing	1
88	RP-002-35	Roll Pin 3/16 x 5/8	4
89	00-175531	Roller & Shaft Assy. (Incls. Item 93 & 88)	1
90	00-175556	Spacer - Hotplate	2
91	SC-037-85	Cap Screw 5/16-18 x 1 Hex Hd	2
92	WL-003-47	Lockwasher 5/16 Helical	2
93	00-184738	Bearing - Thrust	1
94	00-175545	Frame Assy. (LH) (Incls. Clutch & Bearing Assy.)	1

NOTES

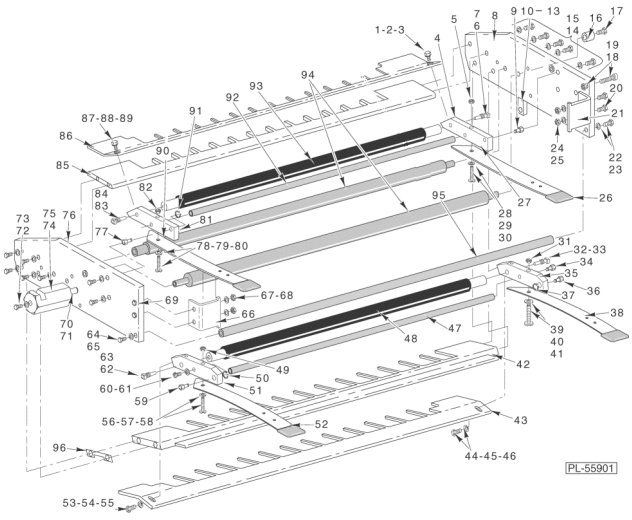

FILM SELECTOR

FILM SELECTOR

ILLUS. PL-55901	PART NO.	NAME OF PART	AMT.
1	SC-068-33	Mach. Screw 10-32 x 1/2 Hex Hd	1
2	WL-004-40	Lockwasher 10 Helical	1
3	WS-019-02	Washer	1
4	00-175619	Arm - Top Roller	1
5	NS-009-30	Nut 10-32 Hex	1
6	00-175628	Stud - Film Roller	1
7	00-175627	Stud - Bearing	1
8	00-184356	Frame Assy. (LH)	1
9	00-175618	Stud - Arm Pivot	1
10	00-183547	Link - Film Solenoid	1
11	00-175993	Stud - Crank	1
12	WL-004-40	Lockwasher 10 Helical	1
13	WS-019-02	Washer	1
14	SC-068-33	Mach. Screw 10-32 x 1/2 Hex Hd	9
15	WL-004-40	Lockwasher 10 Helical	9
16	00-183548	Spacer - Solenoid Link	1
17	SC-068-31	Mach. Screw 10-32 x 3/4 Hex Hd	1
18	SC-089-79	Cap Screw 10-32 x 1 Soc. Hd	1
19	NS-009-30	Nut 10-32 Hex	1
20	SC-068-33	Mach. Screw 10-32 x 1/2 Hex Hd	2
21	00-175626	Stop - Spring Handle	1
22	SC-068-33	Mach. Screw 10-32 x 1/2 Hex Hd	1
23	WL-004-40	Lockwasher 10 Helical	1
24	WL-004-40	Lockwasher 10 Helical	2
25	NS-009-30	Nut 10-32 Hex	2
26	00-332372	Spring Handle Assy	1
27	RR-004-02	Retaining Ring	1
28	SC-081-18	Mach. Screw 10-32 x 1 1/8 Rd. Hd	1
29	WL-004-40	Lockwasher 10 Helical	1
30	WS-019-02	Washer	1
31	NS-009-30	Nut 10-32 Hex	1
32	00-175628	Stud - Film Roller	1
33	00-175627	Stud - Bearing	1
34	00-334976	Stud - Changer Solenoid	1
35	00-175620	Arm - Bottom Roller	1
36	00-175618	Stud - Arm Pivot	1
37	RR-004-02	Retaining Ring	1
38	00-332372	Spring Handle Assy	1
39	WL-004-40	Lockwasher 10 Helical	1
40	SC-081-18	Mach. Screw 10-32 x 1 1/8 Rd. Hd	1
41	WS-019-02	Washer	1
42	00-044628	Guide - Narrow Film	1
43	00-175622	Guide - Film Changer	1
44	SC-068-33	Mach. Screw 10-32 x 1/2 Hex Hd	1
45	WL-004-40	Lockwasher 10 Helical	1
46	WS-019-02	Washer	1
47	00-175621	Rod - Tie	1
48	00-175613	Tapered Roller Assy	1
49	NS-009-30	Nut 10-32 Hex	1
50	RR-004-02	Retaining Ring	1
51	00-175620	Arm - Bottom Roller	1
52	00-332372	Spring Handle Assy	1
53	SC-068-33	Mach. Screw 10-32 x 1/2 Hex Hd	1
54	WL-004-40	Lockwasher 10 Helical	1
55	WS-019-02	Washer	1

FILM SELECTOR

ILLUS. PL-55901	PART NO.	NAME OF PART	AMT.
56	SC-081-18	Mach. Screw 10-32 x 1 1/8 Rd. Hd	1
57	WL-004-40	Lockwasher 10 Helical	1
58	WS-019-02	Washer	1
59	00-175618	Stud - Arm Pivot	1
60	SC-068-31	Mach. Screw 10-32 x 3/4 Hex Hd	1
61	WL-004-40	Lockwasher 10 Helical	1
62	00-175628	Stud - Film Roller	1
63	00-175627	Stud - Bearing	1
64	SC-068-33	Mach. Screw 10-32 x 1/2 Hex Hd	9
65	WL-004-40	Lockwasher 10 Helical	9
66	00-175626	Stop - Spring Handle	1
67	WL-004-40	Lockwasher 10 Helical	2
68	NS-009-30	Nut 10-32 Hex	2
69	SC-068-33	Mach. Screw 10-32 x 1/2 Hex Hd	2
70	00-175691	Pivot - Film Guide	2
71	RR-004-05	Retaining Ring	2
72	SC-123-94	Cap Screw 3/8-16 x 3/4 Hex Hd	2
73	WL-004-06	Lockwasher 3/8 Helical	2
74	00-175690	Stud - Film Guide	2
75	SC-047-72	Set Screw 1/4-20 x 3/8 Hex Hdls., Cup Pt	2
76	00-184357	Frame Assy. (RH)	1
77	00-175618	Stud - Arm Pivot	1
78	SC-081-18	Mach. Screw 10-32 x 1 1/8 Rd. Hd	1
79	WL-004-40	Lockwasher 10 Helical	1
80	WS-019-02	Washer	1
81	00-175619	Arm - Top Roller	1
82	NS-009-30	Nut 10-32 Hex	1
83	00-175628	Stud - Film Roller	1
84	00-175627	Stud - Bearing	1
85	00-044630	Guide - Top Film	1
86	00-175622	Guide - Film Changer	1
87	SC-068-33	Mach. Screw 10-32 x 1/2 Hex Hd	1
88	WL-004-40	Lockwasher 10 Helical	1
89	WS-019-02	Washer	1
90	00-332372	Spring Handle Assy	1
91	RR-004-02	Retaining Ring	1
92	00-175621	Rod - Tie	1
93	00-175613	Tapered Roller Assy	1
94	00-044234	Shaft & Bearing Assy	2
95	00-184351	Rod - Tie	1
96	00-047076	Shim	1

NOTES

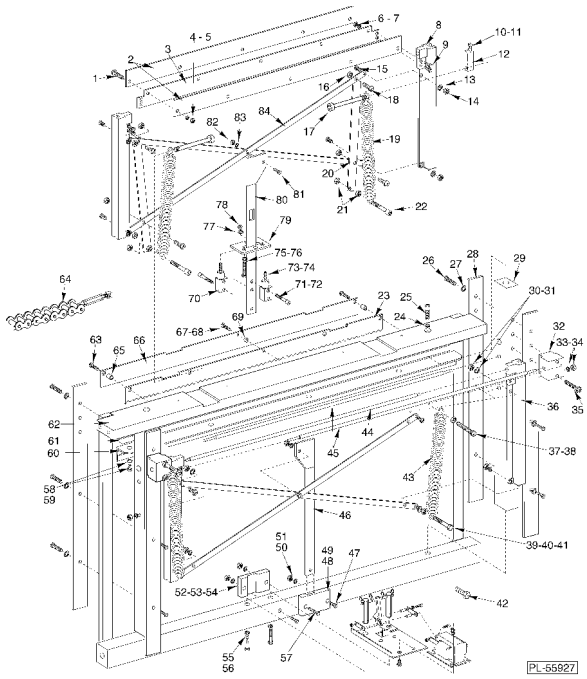

VIEW FROM INTAKE END

KNIFE AND PULL DOWN ASSEMBLY (WITHOUT CURTAIN)

KNIFE AND PULL DOWN ASSEMBLY (WITHOUT CURTAIN)

ILLUS. PL-55927	PART NO.	NAME OF PART	AMT.
1	SC-121-20	Mach. Screw 8-32 x 5/8 Bndg. Hd	5
2	00-183504	Plate - Knife Channel	2
3	00-175864	Channel - Support	1
4	WL-003-12	Lockwasher #8 Helical	5
5	NS-009-12	Nut 8-32 Hex	5
6	WL-004-40	Lockwasher 10 Helical	4
7	NS-009-30	Nut 10-32 Hex	4
8	00-175860	Slide - Knife & Pulldown	2
9	SC-068-30	Mach. Screw 10-32 x 5/8 Hex Hd	4
10	SC-089-05	Cap Screw 1/4-20 x 1 1/4 Socket Hex Hd	2
11	NS-013-02	Nut 1/4-20 Hex	2
12	00-334750	Block - Spring Mtg	1
13	WL-013-14	Lockwasher 1/4 Internal Shakeproof	4
14	NS-017-03	Jam Nut 1/4-20 Hex	4
15	SC-014-64	Mach. Screw 1/4-20 x 5/8 Slotted Flat Hd	6
16	NS-013-02	Nut 1/4-20 Hex	4
17	00-334758	Screw - Spring Mtg	2
18	00-331890	Screw - Nylok	4
19	00-334748	Spring - Knife Assy	2
20	00-334749	Plate - Knife Spring Mtg	2
21	NS-013-02	Nut 1/4-20 Hex	4
22	SC-089-05	Cap Screw 1/4-20 x 1 1/4 Socket Hex Hd	2
23	00-175863	Knife	1
24	WL-003-38	Lockwasher 1/4 Helical	2
25	SC-089-02	Cap Screw 1/4-20 x 3/4 Socket Fil. Hd	2
26	SC-118-20	Cap Screw 1/4-20 x 1/2 Hex Hd	10
27	WL-003-38	Lockwasher 1/4 Helical	10
28	00-175837	Rail - Guide	4
29	00-184118	Slide Bar Mount Assy. (Incls. Sleeve Bearing)	2
30	NS-017-03	Jam Nut 1/4-20 Hex	4
31	WL-013-14	Lockwasher 1/4 Internal Shakeproof	4
32	00-175857	Block & Bearing Assy	2
33	WL-003-38	Lockwasher 1/4 Helical	2
34	NS-013-02	Nut 1/4-20 Hex	2
35	SC-014-63	Mach. Screw 1/4-20 x 1 3/8 Slotted Flat Hd	2
36	00-175860	Slide - Knife & Pulldown	2
37	SC-024-07	Mach. Screw 1/4-20 x 2 Slotted Fil. Hd. (SST)	2
38	NS-013-02	Nut 1/4-20 Hex	2
39	SC-118-17	Cap Screw 1/4-20 x 1-1/4 Hex Hd	2
40	WS-017-25	Washer	2
41	NS-017-03	Jam Nut 1/4-20 Hex	2
42	SC-093-21	Cap Screw 1/4-20 x 1 1/2 Socket Hd	2
43	00-049043	Spring - Pulldown	2
44	00-175855	Roller - Pull Bar	1
45	00-175835	Roller - Stationary	2
46	00-175847	Pull Down Bar Assy	1
47	SC-118-15	Cap Screw 1/4-20 x 1 3/4 Hex Hd	2
48	00-175849	Guide - Pull Bar	1
49	00-175841	Spacer - Pull Bar	1
50	WL-003-38	Lockwasher 1/4 Helical	3
51	NS-031-20	Stop Nut 1/4-20 Hex	3
52	00-175849	Guide - Pull Bar	1
53	00-175850	Spacer - Knife Bar	1
54	00-175851	Spacer - Pull Bar	1
55	SC-092-31	Cap Screw 1/4-20 x 1 1/2 Soc. Fil. Hd	2

KNIFE AND PULL DOWN ASSEMBLY (WITHOUT CURTAIN)

ILLUS. PL-55927	PART NO.	NAME OF PART	AMT.
56	WL-003-38	Lockwasher 1/4 Helical	2
57	SC-112-88	Mach. Screw 1/4-20 x 2-1/4 Hex Hd	1
58	SC-089-69	Cap Screw 10-32 x 1/2 Socket Hex Hd	4
59	WL-004-40	Lockwasher 10 Helical	4
60	00-044190	NLA - Obsolete--Guard - Knife Front	1
61	00-183587	Cushion - Roller	1
62	00-175838	Knife Frame Assy	1
63	SC-084-34	Cap Screw 1/4-20 x 3/4 Flat Hd	2
64	00-046229	Chain - Knife Reset	1
65	00-183500	Spacer - Knife End	2
66	00-183503	Guard - Knife Rear	1
67	SC-121-24	Mach. Screw 8-32 x 5/8 Flat Hd	1
68	WS-023-20	Washer	1
69	00-042365	Spacer - Knife Center	1
70	00-184096	Block - Bumper	2
71	SC-089-04	Cap Screw 1/4-20 x 1 Soc. Hex Hd	2
72	WL-003-38	Lockwasher 1/4 Helical	2
73	00-175826	Bumper - Knife	2
74	SC-084-34	Cap Screw 1/4-20 x 3/4 Flat Hd	2
75	WL-003-38	Lockwasher 1/4 Helical	2
76	SC-118-15	Cap Screw 1/4-20 x 1 3/4 Hex Hd	2
77	WL-003-38	Lockwasher 1/4 Helical	2
78	NS-031-20	Stop Nut 1/4-20 Hex	2
79	00-044157	Plate - Knife Bumper	1
80	00-048635	Knife Bar Assy	1
81	SC-118-18	Cap Screw 1/4-20 x 7/8 Hex Hd	2
82	NS-031-20	Stop Nut 1/4-20 Hex	2
83	WL-003-38	Lockwasher 1/4 Helical	2
84	00-175861	Brace - Cross	4

NOTES

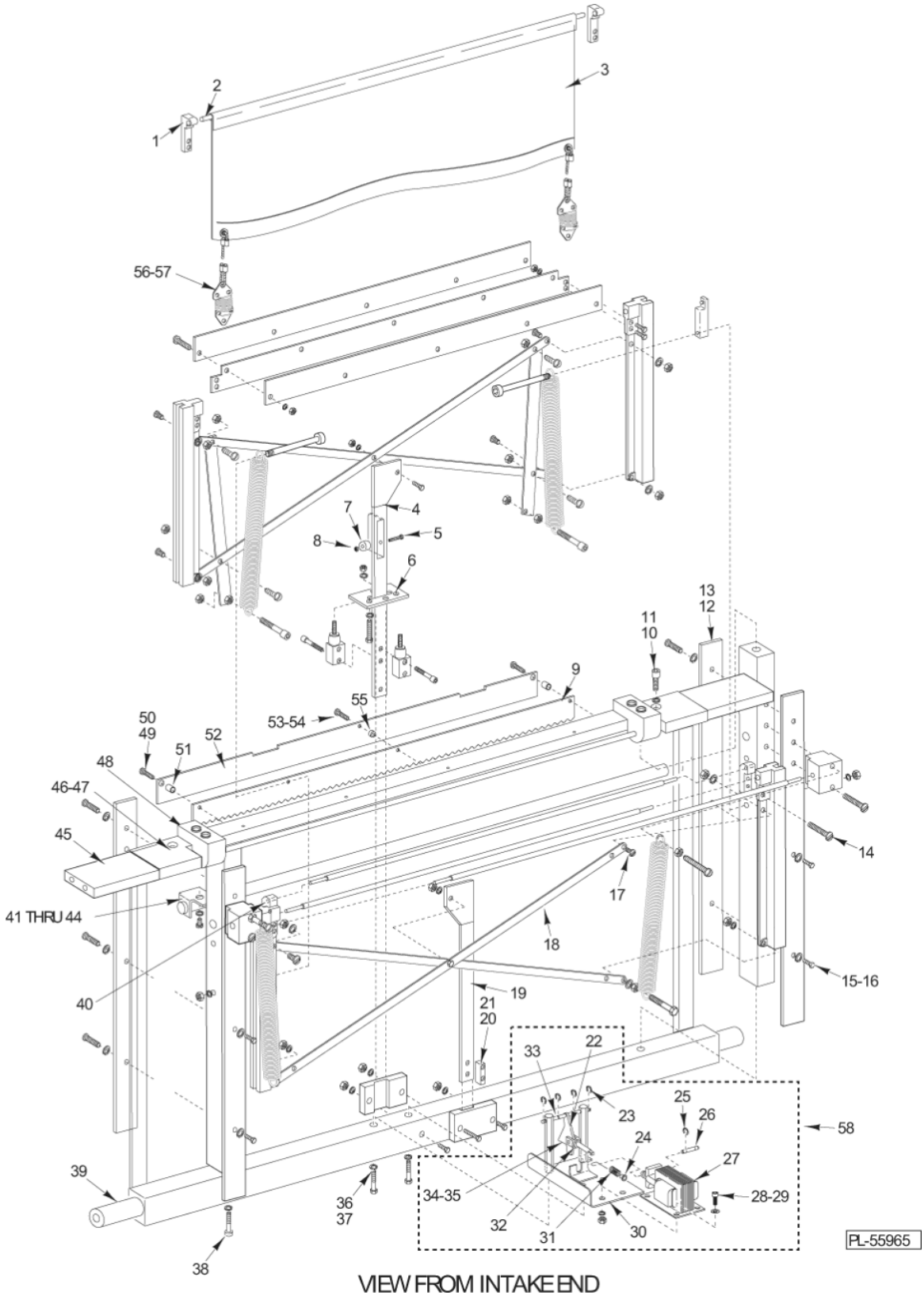

VIEW FROM INTAKE END

KNIFE AND PULL DOWN ASSEMBLY
(WITH CURTAIN)

KNIFE AND PULL DOWN ASSEMBLY (WITH CURTAIN)

ILLUS. PL-55965	PART NO.	NAME OF PART	AMT.
1	00-044159	Bracket - Curtain	2
2	00-044232	Roller - Film Curtain	2
3	00-044243	Curtain & Spring Assy. (Incls. Springs, Cables, Etc.)	2
4	00-048495	Knife Bar Assy. (Incls items 5, 7, & 8)	1
5	SC-086-01	Shoulder Screw 10-24 x 3/4 Socket Hex Hd	1
6	00-044157	Plate - Knife Bumper	1
7	00-044202	Roller - Knife Latch	2
8	NS-009-22	Nut 10-24 Hex	1
9	00-044169	Knife	1
10	SC-089-02	Cap Screw 1/4-20 x 3/4 Soc. Hd	2
11	WL-003-38	Lockwasher 1/4 Helical	2
12	00-044044	Spacer - Knife Slide Bar	2
13	00-175837	Rail - Guide	4
14	SC-093-21	Mach. Screw 10-32 x 3/8 Pan Hd. (SST)	4
15	SC-117-07	Mach. Screw 1/4-20 x 5/8 Hex Hd	4
16	WL-003-38	Lockwasher 1/4 Helical	4
17	SC-014-64	Mach. Screw 1/4-20 x 5/8 Slotted Flat Hd	2
18	00-175861	Brace - Cross	2
19	00-044168	Pulldown Bar Assy	1
20	00-044156	Block - Chain Connection	1
21	SC-100-08	Mach. Screw Special 1/4-20 x 3/8 Hex Hd., Whiz-Lock	2
22	00-044218	Knife Latch Assy	1
23	RR-009-09	Retaining Ring	4
24	00-044668	Bushing - Spring	1
25	RR-006-12	Retaining Ring	2
26	00-044646	Cap Screw 10-24 x 1 Socket Hex Hd	1
27	00-044215	Solenoid	1
28	WL-004-40	Lockwasher #10 Helical	2
29	SC-040-01	Cap Screw 10-32 x 3/8 Soc. Hdls., Cup Pt	4
30	00-044211	Knife Solenoid Plate Assy	1
31	00-044200	Spring - Latch Return	1
32	00-047413	Sleeve - Solenoid Link	1
33	00-044214	Shaft - Latch	1
34	RR-006-10	Retaining Ring	2
35	00-044896	Pin - Knife Link	1
36	SC-118-15	Cap Screw 1/4-20 x 1 3/4 Hex Hd	2
37	WL-003-38	Lockwasher 1/4 Helical	2
38	SC-093-21	Cap Screw 1/4-20 x 1 1/2 Soc. Hd	2
39	00-044179	Spacer - Knife Frame Lower	2
40	00-044159	Bracket - Curtain	2
41	00-440521	Shaft - Knife Guard	1
42	00-440520	Bracket - Roller (LH)	1
43	00-440519	Bracket - Roller (RH)	1
44	00-047967	Bearing - Nyliner 3/8 Dia	2
45	00-044178	Spacer - Knife Frame Top	2
46	00-044173	Knife Frame Assy	1
47	SC-092-31	Cap Screw 1/4-20 x 1 1/2 Soc. Hd. (Use With Item 45)	2
48	00-044158	Block - Roller	2
49	SC-068-31	Mach. Screw 10-32 x 3/4 Hex Hd	2
50	WL-004-40	Lockwasher 10 Helical	2
51	00-440365	Spacer - Knife Guard	2
52	00-044167	Guard - Knife Rear	1
53	SC-040-61	Cap Screw 8-32 x 3/8 Socket Hex Hd	4
54	WS-023-20	Washer	4
55	00-440366	Spacer - Knife Center	1
56	00-044458	Spring - Curtain (Incls. Item 56)	2
57	00-049044	Hook - Spring	2
58	00-044216	Latch Assy - Knife (Includes Items 22-35)	1

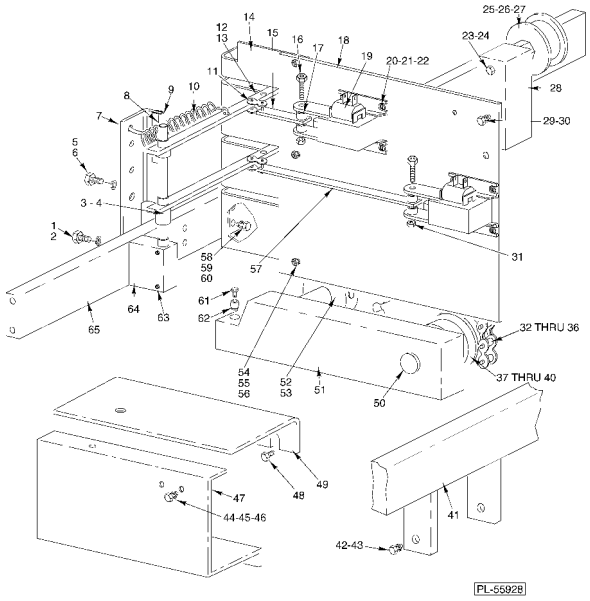

FILM LENGTH

FILM LENGTH

ILLUS. PL-55928	PART NO.	NAME OF PART	AMT.
1	SC-036-40	Cap Screw 5/16-18 x 1-1/4 Hex Hd	2
2	WL-003-47	Lockwasher 5/16 Helical	2
3	00-086710	Collar Assy	2
4	SC-075-10	Set Screw 1/4-20 x 3/16 Soc. Hdls., Cup Pt	2
5	SC-062-59	Cap Screw 5/16-18 x 5/8 Hex Hd	2
6	WL-003-47	Lockwasher 5/16 Helical	2
7	00-334764	Bracket - Spring	1
8	00-175652	Shaft - Lever Pivot	1
9	00-048090-00003	Dampener - Lever	1
10	00-440474	Spring - Lever Return	2
11	00-044784	Link - Connecting	2
12	00-175660	Latch - Pivot Assy	2
13	00-048292	Bearing	2
14	00-044330	Bracket - Latch Support	1
15	00-334783	Rod - Solenoid Link (Short)	1
16	SC-116-18	Cap Screw 8-32 x 1 Soc. Hex Hd	2
17	00-334782	Bushing - Solenoid	2
18	00-175654	Plate - Solenoid	1
19	00-332027	Solenoid - Wide Film	2
20	SD-024-38	Self-Tapping Screw 10-24 x 3/8 Phil. Pan Hd., Type TT	8
21	WL-007-12	Lockwasher #10 External Shakeproof	8
22	WS-019-06	Washer	8
23	SC-036-40	Cap Screw 5/16-18 x 1-1/4 Hex Hd	1
24	WL-003-47	Lockwasher 5/16 Helical	1
25	00-047828	Roller - Film Adjust Chain	1
26	00-047825	Stud - Film Adjust Idler	1
27	RR-008-13	Ring - Retaining	1
28	00-175658	Block - Idler Mounting	1
29	SC-062-59	Cap Screw 5/16-18 x 5/8 Hex Hd	2
30	WL-003-47	Lockwasher 5/16 Helical	2
31	NS-031-07	Stop Nut 8-32 Hex	2
32	00-046229	Knife Reset Chain Assy. (Include Turnbuckles)	1
33	00-046233	Film Adjust Chain Assy	1
34	SC-117-91	Cap Screw 1/4-20 x 1 Hex Hd	3
35	WL-003-38	Lockwasher 1/4 Helical	3
36	NS-013-02	Nut 1/4-20 Hex	3
37	00-086713	Collar - Steel	2
38	00-175659	Roller - Knife Chain Guide	1
39	SC-120-38	Cap Screw 5/16-18 x 1 Hex Hd	2
40	WL-003-47	Lockwasher 5/16 Helical	2
41	00-175645	Bar & Block Assy	1
42	SC-118-10	Cap Screw 3/8-16 x 1 Hex Hd	4
43	WL-004-06	Lockwasher 3/8 Helical	4
44	SD-024-38	Self-Tapping Screw 10-24 x 3/8 Phil. Pan Hd., Type TT	2
45	WL-006-07	Lockwasher #10 Helical (SST)	2
46	WS-019-06	Washer	2
47	00-183819	Cover - Film Adjust	1
48	SD-008-18	Self-Tapping Screw 8-18 x 3/8 Phil. Bndg. Hd., Type B	1
49	00-183524	Shield - Film Adjust	1
50	00-175644	Shaft - Film Adjust Pivot	1
51	00-048502	Film Adjust Lever Assy	1
52	00-184601	Sprocket Assy. (15T)	1
53	RR-007-20	Retaining Ring	1
54	SC-062-59	Cap Screw 5/16-18 x 5/8 Hex Hd	3
55	WL-003-47	Lockwasher 5/16 Helical	3

FILM LENGTH

ILLUS. PL-55928	PART NO.	NAME OF PART	AMT.
56	NS-013-14	Nut 5/16-18 Hex	3
57	00-334781	Rod - Solenoid Link (Long)	1
58	SC-117-91	Cap Screw 1/4-20 x 1 Hex Hd	2
59	WL-003-47	Lockwasher 5/16 Helical	2
60	NS-013-14	Nut 5/16-18 Hex	2
61	SC-066-20	Mach. Screw 10-32 x 1/2 Phil. Truss Hd. (SST)	2
62	00-175826	Bumper - Knife	1
63	SC-055-01	Set Screw 10-24 x 1/4 Hex Hdls., Cup Pt. (SST)	2
64	00-175651	Block - Pivot	1
65	00-175653	Spacer - Film Adjustment Mounting	1

NOTES

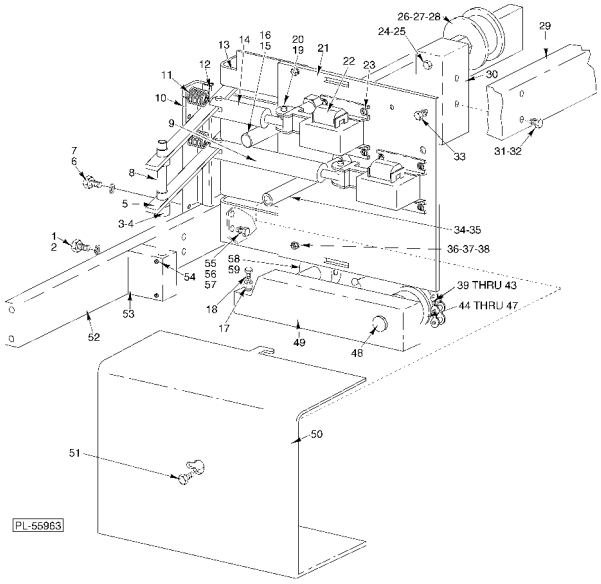

FILM LENGTH
(WITH PLASTIC LINKS)

FILM LENGTH
(WITH PLASTIC LINKS)

ILLUS. PL-55963	PART NO.	NAME OF PART	AMT.
1	SC-036-40	Cap Screw 5/16-18 x 1-1/4 Hex Hd	2
2	WL-003-47	Lockwasher 5/16 Helical	2
3	00-086710	Collar Assy. (Incls. Item 4)	2
4	SC-075-10	Set Screw 1/4-20 x 3/16 Soc. Hdls., Cup Pt	2
5	00-175660	Latch - Pivot Assy	2
6	SC-036-40	Cap Screw 5/16-18 x 1-1/4 Hex Hd	2
7	WL-003-47	Lockwasher 5/16 Helical	2
8	00-175652	Shaft - Lever Pivot	1
9	00-044320	Rod - Connecting (Long)	1
10	00-334764	Bracket - Spring	1
11	00-440474	Spring - Lever Adjust	2
12	00-048090-00003	Dampener - Lever	1
13	00-044330	Bracket - Latch Support	1
14	00-044319	Rod - Connecting (Short)	1
15	00-044337	Pin - Support	1
16	SC-121-61	Mach. Screw 1/4-20 x 5/8 Hex Washer Hd.,Whiz-Lock(Mounts Item 15 to Plate)	1
17	00-175826	Bumper - Knife	1
18	SC-066-20	Mach. Screw 10-32 x 1/2 Phil. Truss Hd. (SST)	1
19	00-044321	Pin	4
20	RR-011-69	Retaining Ring	4
21	00-044327	Plate Assy	1
22	00-044227	Solenoid - Film Pull	2
23	SD-024-18	Self-Tapping Screw 10-24 x 1/2 Hex Hd., Type TT	8
24	SC-036-40	Cap Screw 5/16-18 x 1-1/4 Hex Hd	1
25	WL-003-47	Lockwasher 5/16 Helical	1
26	00-047828	Roller - Film Adjust	1
27	00-047825	Stud - Film Adjust Idler	1
28	RR-008-13	Retaining Ring	1
29	00-175645	Bar & Block Assy	1
30	00-175658	Block - Idler Mounting	1
31	SC-036-40	Cap Screw 5/16-18 x 1-1/4 Hex Hd	4
32	WL-003-47	Lockwasher 5/16 Helical	4
33	SC-040-65	Cap Screw 5/16-18 x 5/8 Hex Socket Hd	2
34	00-044298	Pin - Standoff Support	1
35	SC-100-08	Mach. Screw Special 1/4-20 x 3/8 Hex Hd., Whiz-Lock (Mounts Item 34 to Plate)	1
36	SC-062-59	Cap Screw 5/16-18 x 5/8 Hex Hd	3
37	WL-003-47	Lockwasher 5/16 Helical	3
38	NS-013-14	Nut 5/16-18 Hex	3
39	00-046229	Knife Reset Chain Assy	1
40	00-046231	Film Adjust Chain Assy. (Use with Curtain Assy.)	1
41	SC-117-91	Cap Screw 1/4-20 x 1 Hex Hd	3
42	WL-003-38	Lockwasher 1/4 Helical	3
43	NS-013-02	Nut 1/4-20 Hex	3
44	00-086713	Collar - Steel	2
45	00-175659	Roller - Knife Chain Guide	1
46	SC-120-38	Cap Screw 5/16-18 x 1 Hex Hd	2
47	WL-003-47	Lockwasher 5/16 Helical	2
48	00-175644	Shaft - Film Adjust Pivot	1
49	00-048502	Film Adjust Lever Assy	1
50	00-044323	Cover - Film Adjust	1
51	SC-114-04	Mach. Screw 1/4-20 x 1/2 Hex Washer Hd., Slotted	1
52	00-175653	Spacer - Film Adjustment Mounting	1
53	00-175651	Block - Pivot	1
54	SC-055-01	Set Screw 10-24 x 1/4 Hex Hdls., Cup Pt. (SST)	2
55	SC-117-91	Cap Screw 1/4-20 x 1 Hex Hd	2
56	WL-003-47	Lockwasher 5/16 Helical	2
57	NS-013-14	Nut 5/16-18 Hex	2
58	00-184601	Sprocket Assy. (15T)	1
59	RR-007-20	Retaining Ring	1

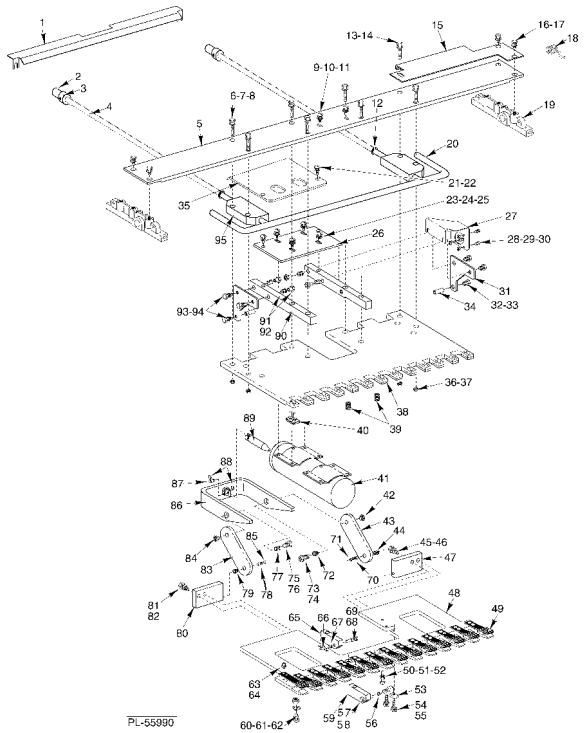
1
2
3
4
5
6-7-8
9-10-11
12
13-14
15
16-17
18
19
20
21-22
23-24-25
26
27
28-29-30
31
32-33
34
35
36-37
38
39
40
41
42
43
44
45-46
47
48
49
50-51-52
53
54
55
56
57
58
59
60-61-62
63
64
65
66
67
68
69
70
71
72
73
74
75
76
77
78
79
80
81
82
83
84
85
86
87
88
89
90
91
92
93-94
95
PL-55990

GRIPPER

GRIPPER

ILLUS. PL-55990	PART NO.	NAME OF PART	AMT.
1	00-175708	Stop - Film Release	1
2	00-049033	Bumper Assy	2
3	SC-116-79	Set Screw 10-32 x 1/4 Soc. Hdls., Cup Pt	2
4	00-044447	Spring	2
5	00-042881	Bar - Gripper Support	1
6	SC-113-60	Cap Screw 1/4-20 x 1 1/2 Hex Hd	7
7	WL-003-38	Lockwasher 1/4 Helical	7
8	WS-022-06	Washer (SST)	7
9	SC-018-23	Mach. Screw 8-32 x 5/8 Phil. Pan Hd	2
10	WL-013-08	Lockwasher #8 Internal Shakeproof	2
11	WS-023-22	Washer (SST)	2
12	WS-003-43	Washer	2
13	SC-113-60	Cap Screw 1/4-20 x 1 1/2 Hex Hd	1
14	WL-003-38	Lockwasher 1/4 Helical	1
15	00-042982	Bracket - Cable	1
16	SC-120-12	Mach. Screw 1/4-20 x 5/8 Phil. Truss Hd	4
17	WL-008-17	Lockwasher 1/4 Internal	4
18	00-183722	Wire - Ground	1
19	00-440591	Block - Gripper Slide	2
20	00-175717	Film Rod Assy	1
21	SC-018-22	Mach. Screw 10-24 x 1/2 Phil. Pan Hd	2
22	WL-004-40	Lockwasher 10 Helical	2
23	SC-093-04	Mach. Screw 8-32 x 1/2 Phil. Pan Hd. (SST)	4
24	WL-013-08	Lockwasher #8 Internal Shakeproof	4
25	WS-023-22	Washer (SST)	4
26	00-183719	Plate - Solenoid Mounting	1
27	00-334763	Bracket - Gripper Plug	1
28	SC-113-10	Mach. Screw 4-40 x 3/8 Phil. Pan Hd	4
29	WL-008-45	Lockwasher #4 Internal Shakeproof	4
30	NS-009-02	Nut 4-40 Hex	4
31	00-334770	Plate - Gripper	2
32	SC-068-33	Mach. Screw 10-32 x 1/2 Hex Hd	3
33	WL-004-40	Lockwasher 10 Helical	2
34	00-332912	Spacer	3
35	00-441763	Top Cover	1
36	NS-013-02	Nut 1/4-20 Hex	4
37	WL-003-38	Lockwasher 1/4 Helical	4
38	00-043930	Plate - Gripper Upper	1
39	00-331841	Spring - Gripper Opening	2
40	00-043452	Pad - Gripper (Gray) (Set of 13 Pads) (Use W/Item 35)	1
41	00-049390	Gripper Solenoid Assy	1
42	00-183710	Stud - Link	1
43	00-441452	Link - Gripper Solenoid	1
44	00-175560	Bushing - Nyliner	1
45	SC-110-31	Mach. Screw 10-24 x 3/4 Hex Hd	2
46	WL-004-40	Lockwasher 10 Helical	2
47	00-184124	Gripper Block Assy. (LH) (Incls. Items 40, 64, & 79)	1
48	00-175724	Plate - Gripper Lower	1
49	00-332404	Gripper Spring Assy	13
50	SC-009-91	Mach. Screw 1/4-20 x 1 1/4 Slotted Rd. Hd	1
51	NS-013-02	Nut 1/4-20 Hex	1
52	WL-003-38	Lockwasher 1/4 Helical	1
53	00-043890	Pivot - Gripper Plate	1
54	SC-089-70	Cap Screw 10-32 x 5/8 Soc. Hex Hd	4
55	WL-006-07	Lockwasher #10 Helical (SST)	4

GRIPPER

ILLUS. PL-55990	PART NO.	NAME OF PART	AMT.
56	00-183765	Bearing - Nyliner	1
57	00-175713	Stud - Hinge	1
58	WL-003-38	Lockwasher 1/4 Helical	1
59	00-334865	Spacer - Bottom Plate	1
60	SC-009-91	Screw 1/4-20 x 1 1/4 Rd	1
61	WL-005-38	Lockwasher 1/4	1
62	NS-013-02	Nut 1/4-20 Hex	1
63	WL-005-12	Lockwasher #8 Light (Bronze)	26
64	SC-018-31	Mach. Screw 8-32 x 3/8 Phil. Pan Hd	26
65	00-334865	Spacer - Bottom Plate	1
66	00-175713	Stud - Hinge	1
67	WL-003-38	Lockwasher 1/4 Helical	1
68	00-043890	Pivot - Gripper Plate	1
69	00-183765	Bearing - Nyliner	1
70	00-183716	Pin - Gripper Block	1
71	RR-006-22	Retaining Ring 1/4 In. (SST)	1
72	SC-018-22	Mach. Screw 10-24 x 1/2 Phil. Pan Hd	1
73	WL-004-40	Lockwasher 10 Helical	1
74	SC-018-22	Mach. Screw 10-24 x 1/2 Phil. Pan Hd	1
75	WL-004-40	Lockwasher 10 Helical	1
76	00-175560	Bushing - Nyliner	1
77	00-183716	Pin - Gripper Block	1
78	00-175560	Bushing - Nyliner	1
79	00-184123	Gripper Block Assy. (RH) (Incls. Items 71, 72, & 78)	1
80	SC-110-31	Mach. Screw 10-24 x 3/4 Hex Hd	2
81	00-441452	Link - Gripper Solenoid	1
82	WL-004-40	Lockwasher 10 Helical	2
83	00-183710	Stud - Link	1
84	RR-006-22	Retaining Ring 1/4 In. (SST)	1
85	RR-006-22	Retaining Ring 1/4 In. (SST)	1
86	00-184845	Bracket - Gripper Solenoid	1
87	00-175936	Pin - Rod	1
88	RR-004-23	Retaining Ring	2
89	00-044186	Plunger (Service) (Teflon Coated)	1
90	00-183718	Bar - Roller Support	2
91	00-183714	Roller - Gripper	4
92	00-183713	Stud - Roller	4
93	SC-110-31	Screw 10-24 x 0.750 Hex Hd	4
94	WL-004-40	Lockwasher 10 Helical	2
95	00-175712	Block - Film Rod	2

NOTES

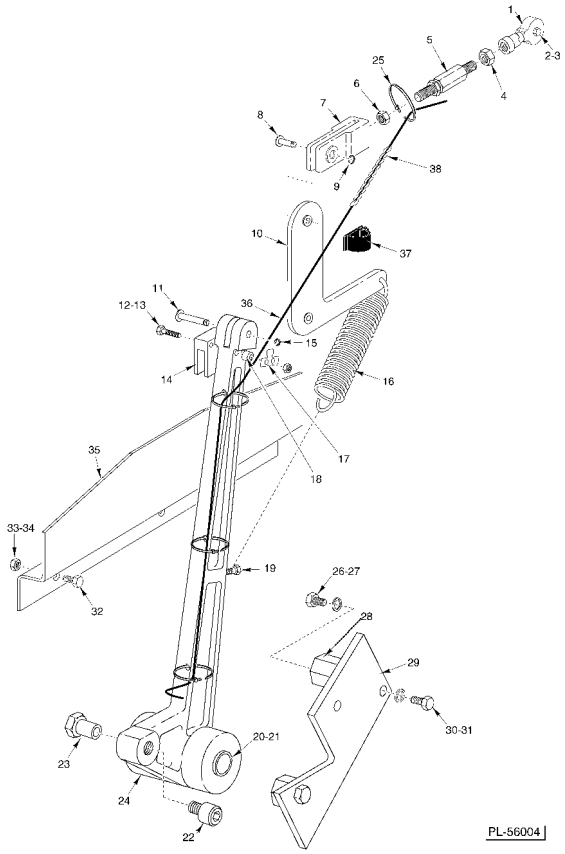

GRIPPER LEVER

GRIPPER LEVER

ILLUS. PL-56004	PART NO.	NAME OF PART	AMT.
1	00-334056	Bearing - (LH Thread)	1
2	00-183431	Screw - Gripper Lever	1
3	WL-008-27	Lockwasher 3/8 Internal Shakeproof	1
4	NS-013-28	Nut 3/8-24 Hex (LH Thread)	1
5	00-184001	Rod - Link	1
6	NS-013-27	Nut 3/8-24 Hex (RH Thread)	1
7	00-334791	Yoke Assy	1
8	00-175743	Pin - Lever Link	1
9	RR-009-10	Retaining Ring 3/8 In. (SST)	1
10	00-175744	Lever Extension Assy	1
11	00-175982	Pin (Lever To Lever)	1
12	SC-062-57	Cap Screw 1/4-20 x 2 Hex Hd	2
13	NS-031-20	Stop Nut 1/4-20 Hex	2
14	00-175735	Block - Slide Bar	1
15	RR-010-05	Retaining Ring	1
16	00-043901	Spring - Gripper Lever	1
17	00-049597	Bracket - Gripple Cable	1
18	00-333750	Spacer	2
19	SC-118-07	Cap Screw 3/8-16 x 2 Hex Hd	1
20	00-175739	Shaft - Gripper Lever	1
21	00-086680	Bearing	2
22	00-259547	Cam - Follower	1
23	00-175742	Nut - Follower Bearing	1
24	00-175978	Gripper Lever Assy. (Incls. Items 1 thru 23)	1
25	00-255502	Tie - Cable Locking	AR
26	SC-118-09	Cap Screw 3/8-16 x 1-1/4 Hex Hd	2
27	WL-004-06	Lockwasher 3/8 Helical	2
28	00-175740	Spacer - Lever Support	2
29	00-175741	Plate - Lever Support	1
30	SC-118-10	Cap Screw 3/8-16 x 1 Hex Hd	2
31	WL-004-06	Lockwasher 3/8 Helical	2
32	SC-118-19	Cap Screw 1/4-20 x 3/4 Hex Hd	3
33	NS-013-02	Nut 1/4-20 Hex	3
34	WL-003-38	Lockwasher 1/4 Helical	3
35	00-175734	Bracket - Slide Bar	1
36	00-049389	Gripper Cable Assy	1
37	00-106825-00001	Clip - Wiring	1
38	00-049600-00001	Wrap - Spiral	1

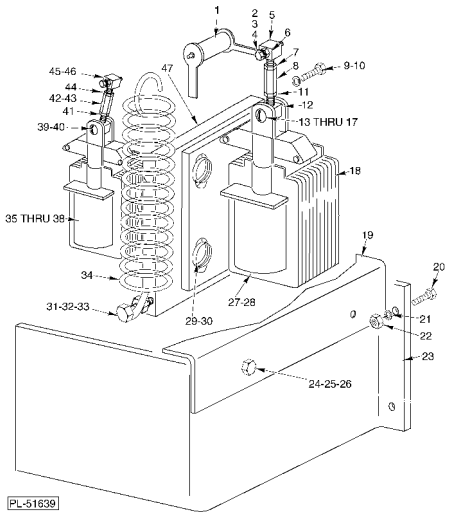

FILM CHANGER SOLENOID ASSEMBLY

FILM CHANGER SOLENOID ASSEMBLY

ILLUS. PL-51639	PART NO.	NAME OF PART	AMT.
1	00-175990	Crank Assy.	1
2	SC-109-52	Cap Screw 10-32 x 1/2 Hex Hd.	1
3	WL-004-40	Lockwasher 10 Helical	1
4	RR-004-02	Retaining Ring	1
5	00-175634	Block - Solenoid Link (LH)	1
6	00-175993	Stud - Crank	1
7	NS-013-08	Nut 1/4-28 (LH Thread)	1
8	00-175636	Block - Take-Up	1
9	SC-117-92	Cap Screw 5/16-18 x 3/4 Hex Hd.	2
10	WL-003-47	Lockwasher 5/16 Helical	2
11	NS-013-07	Nut 1/4-28 Hex (RH Thread)	1
12	00-175635	Block - Solenoid Link (RH)	1
13	SC-081-20	Mach. Screw 10-32 x 1 3/8 Rd. Hd.	1
14	00-175984	Spacer - Solenoid	1
15	RR-004-02	Retaining Ring	2
16	NS-009-30	Nut 10-32 Hex	1
17	WL-004-40	Lockwasher 10 Helical	1
18	00-175637	Solenoid Narrow Film	1
19	00-183966	Cover - Film Changer Top	1
20	SC-123-92	Cap Screw 1/4-20 x 5/8 Hex Hd.	2
21	WL-003-38	Lockwasher 1/4 Helical	2
22	NS-013-02	Nut 1/4-20 Hex	2
23	00-183932	Cover - Film Changer	1
24	SC-009-61	Mach. Screw 8-32 x 1/2 Slotted Rd. Hd.	2
25	00-086878	Nut - Tinnerman	2
26	WL-003-12	Lockwasher #8 Helical	2
27	FE-021-13	Bushing (Nylon) 1/2 I.D.	1
28	00-175514	Cable Assy. - Narrow Solenoid	AR
29	SC-123-92	Cap Screw 1/4-20 x 5/8 Hex Hd.	4
30	WL-003-38	Lockwasher 1/4 Helical	4
31	SC-117-91	Cap Screw 1/4-20 x 1 Hex Hd.	1
32	NS-013-02	Nut 1/4-20 Hex	1
33	WL-003-38	Lockwasher 1/4 Helical	1
34	00-175834	Spring - Knife	1
35	00-332027	Solenoid - Wide Film	1
36	SC-037-80	Cap Screw 10-24 x 1/2 Hex Hd.	4
37	WL-004-40	Lockwasher 10 Helical	4
38	WS-019-06	Washer	4
39	00-183944	Pin - Film Solenoid	1
40	RR-011-69	Retaining Ring	2
41	NS-013-07	Nut 1/4-28 Hex RH Thread	1
42	00-183590	Block - Film Solenoid	1
43	00-183591	Rod - Film Adjust	1
44	NS-013-08	Nut 1/4-28 LH Thread	1
45	00-330072	Block - Chain (RH)	1
46	SC-068-31	Cap Screw 10-32 x 3/4 Hex Hd.	1
47	00-175638	Block - Solenoid Mounting	1
	00-175513	Solenoid Cable Assy. - Wide Solenoid	2
	00-175633	Link Assy. - Solenoid (Incls. Items 5, 7, 8, 11, & 12)	1

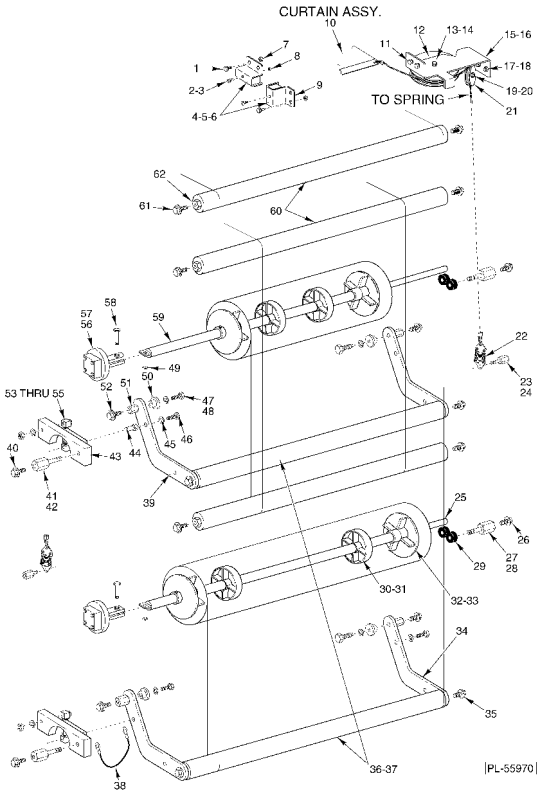
CURTAIN ASSY.
10
12
13-14
15-16
11
17-18
1
7
8
2-3
9
19-20
TO SPRING
4-5-6
21
62
61
60
57
56
58
59
22
23
24
49
53 THRU 55
52
51
50
47
48
40
43
44
45
46
41
42
39
25
26
27
28
29
30-31
32-33
34
35
38
36-37
PL-55970

FILM SUPPLY

FILM SUPPLY

ILLUS. PL-55970	PART NO.	NAME OF PART	AMT.
1	SC-123-92	Mach. Screw Special 1/4-20 x 5/8 Special Hex Washer Hd.	4
2	SC-018-15	Mach. Screw 4-40 x 5/8 Slotted Pan Hd.	2
3	WS-029-24	Washer	2
4	00-042180	Switch - Retro Photo (Switch Only)	1
5	00-046955	Film Supply Switch Cable Assy. (Narrow) (Incls. Item 4)	1
6	00-046956	Film Supply Switch Cable Assy. (Wide) (Incls Item 4)	1
7	NS-038-08	Lock Nut 1/4-20 x 1 Hex Hd.	4
8	NS-009-02	Nut 4-40 Hex	2
9	00-183680	Bracket - Out-Of-Film Switch	2
10	00-044243	Curtain & Spring Assy. (Incls. Springs, Cables, Etc.)	1
11	SC-100-08	Mach. Screw Special 1/4-20 x 3/8 Hex Hd., Whiz-Lock	4
12	00-044160	Roller - Cable	2
13	00-044165	Stud - Pulley	2
14	SC-100-08	Mach. Screw Special 1/4-20 x 3/8 Hex Hd., Whiz-Lock	2
15	00-044172	Bracket - Roller (LH)	1
16	00-044171	Bracket - Roller (RH)	1
17	SC-123-92	Mach. Screw Special 1/4-20 x 5/8 Special Hex Washer Hd.	4
18	NS-038-04	Lock Nut 1/4-20 Special	4
19	00-044165	Stud - Pulley	2
20	SC-100-08	Mach. Screw Special 1/4-20 x 3/8 Hex Hd., Whiz-Lock	2
21	00-044161	Roller - Cable	2
22	00-044458	Spring - Curtain	2
23	00-044229	Stud - Brake Arm (Use W/Curtain Assy.)	1
24	RR-009-10	Retaining Ring 3/8 In. (SST)	1
25	00-183829	Film Shaft & Bearing Assy.	2
26	SC-100-12	Mach. Screw 5/16-18 x 3/4 Flange Hd., Whiz-Lock	4
27	RR-010-12	Retaining Ring	4
28	00-043414	Stud - Film Arbor Roller	4
29	00-183773	Roller - Arbor	4
30	00-183778	Disc - Arbor	4
31	RR-011-06	Retaining Ring	8
32	00-446880	Core - Film	4
33	SC-119-82	Set Screw 5/16-18 x 5/8 (SST)	8
34	00-047352	Dancer Arm Assy. (RH)	2
35	SC-100-12	Mach. Screw 5/16-18 x 3/4 Flange Hd., Whiz-Lock	4
36	00-183800	Dancer Roller Assy.	2
37	00-183777	Shaft - Roller	2
38	00-041480	Ground Wire Assy.	2
39	00-047351	Dancer Arm Assy. (LH)	2
40	SC-100-12	Mach. Screw 5/16-18 x 3/4 Flange Hd., Whiz-Lock	2
41	00-044229	Stud - Brake Arm Assy. (Use W/Curtain Assy.)	1
42	RR-009-10	Retaining Ring 3/8 In. (SST)	2
43	00-183796	Brake Arm Assy.	2
44	00-175993	Stud - Crank	2
45	WL-004-40	Lockwasher 10 Medium	4
46	SC-089-69	Cap Screw 10-32 x 1/2 Soc. Hex Hd.	2
47	SC-118-17	Cap Screw 1/4-20 x 1-1/4 Hex Hd.	4
48	WL-003-38	Lockwasher 1/4 Helical	4
49	RR-004-02	Retaining Ring	2
50	00-047350	Dancer - Pivot	4
51	00-175603	Standoff - Dancer	4
52	SC-100-12	Mach. Screw 5/16-18 x 3/4 Flange Hd., Whiz-Lock	1
53	00-183837	Sleeve - Brake Link	2
54	SC-089-79	Cap Screw 10-32 x 1 Soc. Hd.	2
55	00-175633	Solenoid Link Assy.	3

FILM SUPPLY

ILLUS. PL-55970	PART NO.	NAME OF PART	AMT.
56	SC-100-12	Mach. Screw 5/16-18 x 3/4 Flange Hd., Whiz-Lock	6
57	00-043417	Arbor & Bearing Assy	2
58	00-183770	Pin - Arbor	2
59	00-183829	Film Shaft & Bearing Assy	2
60	00-175598	Film Roller Assy	3
61	SC-123-92	Mach. Screw Special 1/4-20 x 5/8 Special Hex Washer Hd	6
62	00-175611	Roller - Support Spacer	6

NOTES

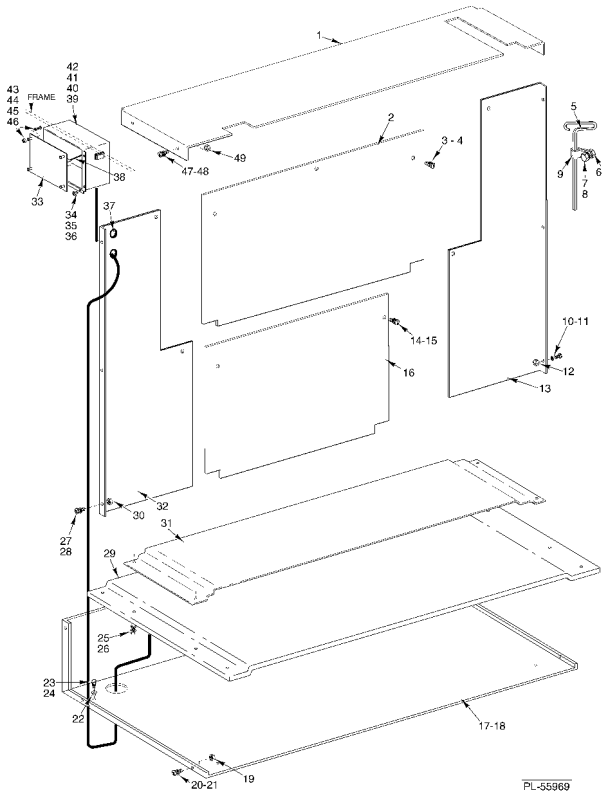
1
42
41
40
39
43
44
45
46
FRAME
38
33
34
35
36
37
47-48
49
2
3 - 4
5
9
6
7
8
14-15
16
10-11
12
13
32
30
31
27
28
29
25
26
23
24
22
17-18
20-21
19
PL-55969

CHAMBER

CHAMBER

ILLUS. PL-55969	PART NO.	NAME OF PART	AMT.
1	00-175592	Top - Chamber	1
2	00-175597	Plate - Rear Upper	1
3	SC-009-61	Mach. Screw 8-32 x 1/2 Slotted Rd. Hd	3
4	00-086878	Nut - Tinnerman	3
5	00-518938	Key (T-Handle 5/32)	1
6	NS-013-02	Nut 1/4-20 Hex	1
7	SC-110-12	Cap Screw 1/4-20 x 5/8 Hex Hd	1
8	WL-003-38	Lockwasher 1/4 Helical	1
9	00-332284	Clamp - Conduit	1
10	SC-018-23	Mach. Screw 8-32 x 5/8 Phil. Pan Hd	3
11	WL-004-40	Lockwasher 10 Helical	3
12	NS-009-30	Nut 10-32 Hex	3
13	00-175595	Side - Chamber (LH)	1
14	SC-009-61	Mach. Screw 8-32 x 1/2 Slotted Rd. Hd	2
15	00-086878	Nut - Tinnerman	2
16	00-175596	Plate - Rear Lower	1
17	00-044025-00001	Bottom Chamber Assy. (ML-44047 & ML-44079)	1
18	00-175593	Bottom - Chamber (ML-44088)	1
19	NS-009-30	Nut 10-32 Hex	4
20	SC-018-23	Mach. Screw 8-32 x 5/8 Phil. Pan Hd	4
21	WL-004-40	Lockwasher 10 Helical	4
22	00-043499	Bushing	4
23	SC-067-07	Mach. Screw 10-24 x 1/2 Hex Hd. (SST)	4
24	WL-006-07	Lockwasher #10 Helical (SST)	4
25	NS-011-12	Stop Nut 8-32 (SST)	4
26	WL-006-02	Lockwasher #8 Helical (SST)	4
27	SC-018-23	Mach. Screw 8-32 x 5/8 Phil. Pan Hd	3
28	WL-004-40	Lockwasher 10 Helical	3
29	00-043463	NLA - Obsolete--Heater Plate Assy. (Includes Harness)	1
30	NS-009-30	Nut 10-32 Hex	3
31	00-043650	Cover - Heater	1
32	00-043492	Side - Chamber (RH)	1
33	00-043684	Controller	1
34	SC-110-31	Mach. Screw 10-24 x 3/4 Hex Hd	4
35	WS-019-10	Washer (SST)	4
36	WL-006-07	Lockwasher #10 Helical (SST)	4
37	FE-021-13	Bushing (Nylon) 1/2 I.D	2
38	00-043686-00001	Harness - Heater Splitter	1
39	00-043902	Controller Cover Assy. (Incls. Items 40, 41, & 42)	1
40	00-043687	Circuit Breaker - 5 Amp	1
41	00-043898	Thermostat - High Limit	1
42	PB-004-01	Plug - Button	1
43	SC-060-69	Mach. Screw 8-32 x 1 Rd. Hd	4
44	WL-008-07	Lockwasher #8 Internal Shakeproof	4
45	NS-011-12	Stop Nut 8-32 (SST)	4
46	WS-019-10	Washer (SST)	4
47	SC-018-23	Mach. Screw 8-32 x 5/8 Phil. Pan Hd	4
48	WL-004-40	Lockwasher 10 Helical	4
49	NS-009-30	Nut 10-32 Hex	4
	00-441131	Label - Film Thread	1
	00-043689-00001	Kit - Film Heater	1
	00-438131-00043	Label - Warning	1

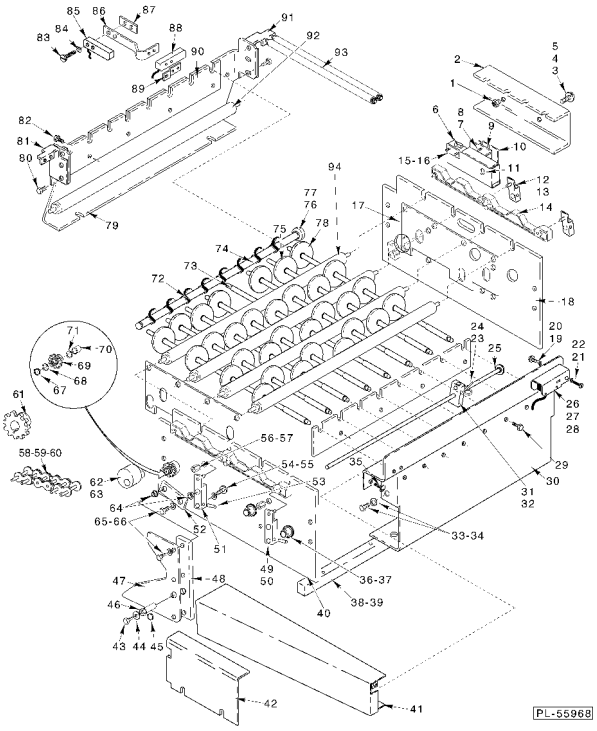

DISCHARGE CONVEYOR ASSEMBLY

DISCHARGE CONVEYOR ASSEMBLY

ILLUS. PL-55968	PART NO.	NAME OF PART	AMT.
1	00-041494	Standoff - Cover	2
2	00-042562	Cover (RH)	1
3	SC-093-21	Mach. Screw 10-32 x 3/8 Pan Hd. (SST)	2
4	WL-007-12	Lockwasher #10 External Shakeproof	4
5	NS-011-23	Mach. Nut Hex 10-32 (SST)	2
6	00-041375	Switch Assy	1
7	SC-068-06	Mach. Screw 6-32 x 5/8 Hex Hd	2
8	WL-019-32	Lockwasher #6 External	2
9	00-331058	Plate - Nut 6-32	2
10	00-041499	Cover - Switch	1
11	FE-022-84	Connector - Strain Relief	2
12	00-041353	Shift Lever Assy	2
13	SC-075-41	Set Screw 10-32 x 3/16 Soc. Hdls., Cup Pt	2
14	00-041350	Cam - Lift	2
15	SC-068-06	Mach. Screw 6-32 x 5/8 Hex Hd	2
16	WL-019-32	Lockwasher #6 External	2
17	00-044040	Plate - Roller	2
18	00-041967	Side Frame Assy. (RH)	1
19	SC-018-29	Mach. Screw 6-32 x 3/8 Phil. Pan Hd	2
20	WL-003-09	Lockwasher #6 Helical	2
21	SC-119-24	Mach. Screw 6-32 x 3/4 Phil. Pan Hd	2
22	WL-003-09	Lockwasher #6 Helical	2
23	00-041990	Lever - Trip	1
24	SC-075-41	Set Screw 10-32 x 3/16 Soc. Hdls., Cup Pt	2
25	00-041991	Shaft - Cam Lever	2
26	00-043004	Bracket - Sensor Mtg	1
27	00-042521	Plate - Nut	1
28	00-043895-00001	LED Sensor Assy. - Sender	1
29	SD-024-18	Self-Tapping Screw 10-24 x 1/2 Hex Hd., Type TT	12
30	00-041965	Stop - Pkg	1
31	00-041371	Base - Trip Lever	2
32	SC-075-41	Set Screw 10-32 x 3/16 Soc. Hdls., Cup Pt	2
33	SD-024-18	Self-Tapping Screw 10-24 x 1/2 Hex Hd., Type TT	4
34	WS-002-32	Washer	4
35	SC-093-21	Mach. Screw 10-32 x 3/8 Pan Hd. (SST)	1
36	00-044068	Bearing - Thrust	1
37	RR-011-05	Retaining Ring	4
38	00-041507	Bar - Front Conveyor Support	1
39	00-041508	Bar - Rear Conveyor Support	1
40	00-041968	Side Frame Assy. (LH)	1
41	00-043052	Chain Cover Assy	1
42	00-041399	Cover (LH)	1
43	SD-024-18	Self-Tapping Screw 10-24 x 1/2 Hex Hd., Type TT	1
44	WS-002-32	Washer	1
45	RR-009-10	Retaining Ring 3/8 In. (SST)	1
46	00-041975	Shifting Arm Stud	1
47	00-041981	Shifter	1
48	00-041984	Shift Arm	1
49	00-041353	Shift Lever Assy	1
50	SC-075-41	Set Screw 10-32 x 3/16 Soc. Hdls., Cup Pt	1
51	00-041983	Shift Lever Assy	1
52	00-041979	Link - Shifting	1
53	SC-075-41	Set Screw 10-32 x 3/16 Soc. Hdls., Cup Pt	1
54	SC-018-62	Mach. Screw 10-24 x 3/8 Phil. Pan Hd	2
55	WL-008-13	Lockwasher #10 Internal Shakeproof	2

DISCHARGE CONVEYOR ASSEMBLY

ILLUS. PL-55968	PART NO.	NAME OF PART	AMT.
56	00-042561	Standoff - Cover	2
57	SC-053-05	Mach. Screw 10-24 x 3/8 Slotted Truss Hd. (SST)	2
58	00-041395	Connector - Double External Pin	1
59	00-087165	Link - Chain Connector	AR
60	00-043495	Chain - Assy. Drive (Transfer Station) (Incls. Items 58 & 59)	1
61	00-043928	Sprocket - Assy. Sealer Drive (Split 20T)	1
62	00-042524	Support - Chain	1
63	SC-089-04	Cap Screw 1/4-20 x 1 Soc. Hex Hd	1
64	00-041977	Bushing - Shifter	2
65	SD-024-18	Self-Tapping Screw 10-24 x 1/2 Hex Hd., Type TT	5
66	WL-008-13	Lockwasher #10 Internal Shakeproof	5
67	RR-011-05	Retaining Rin	1
68	00-044068	Bearing - Thrust	1
69	00-044114	Clutch & Sprocket Assy	1
70	00-041495	Bearing	1
71	00-044068	Bearing - Thrust	1
72	00-041376	Belt - Flat Drive	8
73	00-041888	Roller Assy. (3 Wheels)	1
74	00-041368	Shaft - Belt Drive	1
75	00-041887	Roller Assy. (Offset) (4 Wheels)	3
76	RR-011-05	Retaining Ring	1
77	00-044068	Bearing - Thrust	1
78	00-041886	Roller Assy. (4 Wheels)	4
79	00-041966	Frame - Rear	1
80	SD-024-18	Self-Tapping Screw 10-24 x 1/2 Hex Hd., Type TT	2
81	00-041383-00002	Bracket - Roller Mtg. (LH)	1
82	SD-024-18	Self-Tapping Screw 10-24 x 1/2 Hex Hd., Type TT	8
83	SC-119-51	Mach. Screw 6-32 x 1 Slotted Pan Hd. (SST)	6
84	WL-003-09	Lockwasher #6 Helical	2
85	00-043895-00001	LED Sensor Assy. - Sender	1
86	00-043005	Bracket - Sensor Mtg	1
87	00-042521	Plate - Nut	1
88	00-043829-00002	Photo - Transistor Sensor Assy. - Receiver	2
89	00-042440	Bracket - Reflection Reduction	1
90	00-041969	Strip - Bearing	1
91	00-041383-00001	Bracket - Roller Mtg. (RH)	1
92	00-044291	Roller - Glass Beaded	1
93	00-041357	Conveyor Roller Assy	2
94	00-041982	Roller Assy	4

NOTES

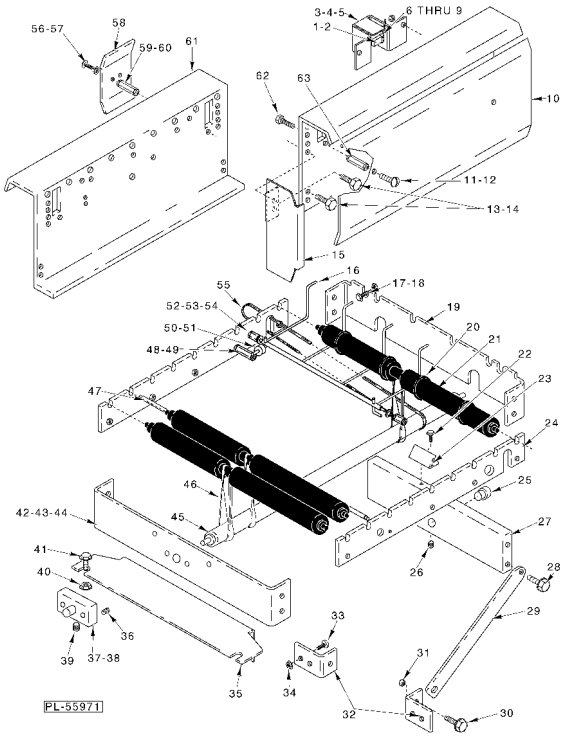

INTERMEDIATE CONVEYOR

INTERMEDIATE CONVEYOR

ILLUS. PL-55971	PART NO.	NAME OF PART	AMT.
1	FE-022-84	Connector - Strain Relief	1
2	FE-006-07	Lock Nut 1/2 (Cnd.)	1
3	00-041502	Cover - Switch	1
4	SC-121-61	Mach. Screw 1/4-20 x 5/8 Hex Washer Hd., Whiz-Lock	2
5	NS-038-04	Lock Nut 1/4-20 Hex	2
6	00-041482	Switch Assy	1
7	00-331058	Plate - Nut 6-32	1
8	SC-009-97	Mach. Screw 6-32 x 3/4 Slotted Rd. Hd	2
9	WL-007-02	Lockwasher #6 External	2
10	00-041489	Cover & Plate Assy	1
11	SC-093-23	Mach. Screw 10-24 x 3/8 Phil. Pan Hd	2
12	WL-013-11	Lockwasher #10 Internal Shakeproof	4
13	SC-121-61	Mach. Screw 1/4-20 x 5/8 Hex Washer Hd., Whiz-Lock	4
14	NS-038-04	Lock Nut 1/4-20 Hex	2
15	00-041485	Cover - End	1
16	00-041423	Finger Bar Assy	1
17	SC-121-61	Mach. Screw 1/4-20 x 5/8 Hex Washer Hd., Whiz-Lock	4
18	NS-038-04	Lock Nut 1/4-20 Hex	4
19	00-041417	Bracket - Connecting	1
20	00-041682	O-Ring	4
21	00-041515	Roller & Pin Assy	9
22	SC-121-61	Mach. Screw 1/4-20 x 5/8 Hex Washer Hd., Whiz-Lock	1
23	00-041503	Deflector - Belt	1
24	00-041408	Bearing - Strip	2
25	00-041404	Shaft - Stub	1
26	SC-047-72	Set Screw 1/4-20 x 3/8 Hex Hdls., Cup Pt	1
27	00-041416	Spacer - Support Mounting	1
28	SC-121-61	Mach. Screw 1/4-20 x 5/8 Hex Washer Hd., Whiz-Lock	4
29	00-041401	Brace - Support	2
30	SC-121-61	Mach. Screw 1/4-20 x 5/8 Hex Washer Hd., Whiz-Lock	2
31	NS-038-04	Lock Nut 1/4-20 Hex	2
32	00-041411	Bracket - Support Mounting	2
33	SC-018-74	Mach. Screw 10-24 x 3 Phil. Pan Hd	4
34	NS-031-15	Stop Nut - Special 10-24 Hex (SST)	4
35	00-041407	Bracket - Conveyor Mounting	1
36	SC-047-72	Set Screw 1/4-20 x 3/8 Hex Hdls., Cup Pt	2
37	00-041409	Block - Mounting	1
38	SC-121-61	Mach. Screw 1/4-20 x 5/8 Hex Washer Hd., Whiz-Lock	2
39	00-041403	Shaft - Stub (Long)	1
40	NS-038-04	Lock Nut 1/4-20 Hex	2
41	SC-121-61	Mach. Screw 1/4-20 x 5/8 Hex Washer Hd., Whiz-Lock	2
42	00-041432	Bracket - Mounting	1
43	SC-121-61	Mach. Screw 1/4-20 x 5/8 Hex Washer Hd., Whiz-Lock	4
44	NS-038-04	Lock Nut 1/4-20 Hex	4
45	00-041425	Drive Roller Assy	1
46	00-041474	Belt - Flat Drive	9
47	00-041418	Bar - Spacer	1
48	00-041405	Spacer - Stop	1
49	SC-121-61	Mach. Screw 1/4-20 x 5/8 Hex Washer Hd., Whiz-Lock	1
50	00-132730	Counterbalance	1
51	SC-075-41	Set Screw 10-32 x 3/16 Socket Hdls., Cup Pt	1
52	00-041410	Block - Pivot	2
53	00-183399	Bushing - Nyliner	2
54	SC-121-61	Mach. Screw 1/4-20 x 5/8 Hex Washer Hd., Whiz-Lock	2
55	00-041477	Belt - O-Ring Drive	2

INTERMEDIATE CONVEYOR

ILLUS. PL-55971	PART NO.	NAME OF PART	AMT.
56	SC-093-23	Mach. Screw 10-24 x 3/8 Phil. Pan Hd	1
57	WL-013-11	Lockwasher #10 Internal Shakeproof	1
58	00-041491	Cover - Short Side	1
59	00-041486	Standoff - Cover	1
60	SC-121-61	Mach. Screw 1/4-20 x 5/8 Hex Washer Hd., Whiz-Lock	1
61	00-041427	Frame - Side	2
62	SC-121-61	Mach. Screw 1/4-20 x 5/8 Hex Washer Hd., Whiz-Lock	2
63	00-041486	Standoff - Cover	2

NOTES

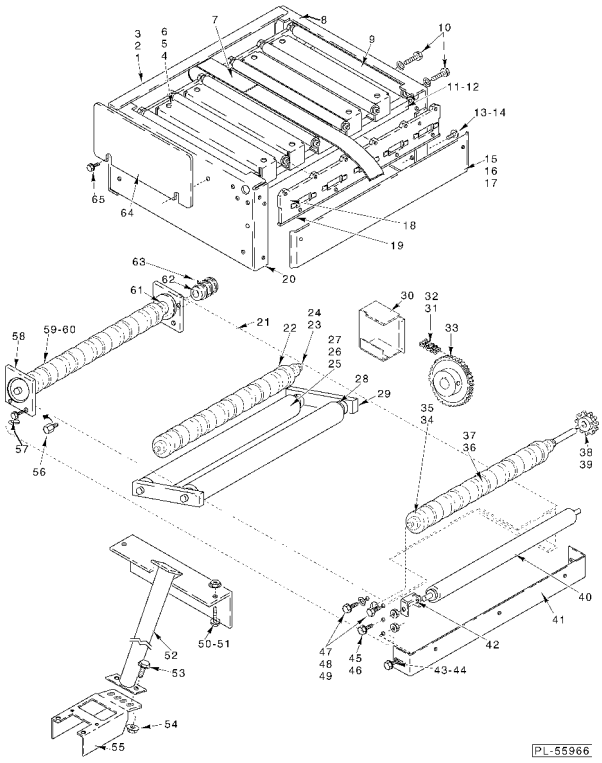

INCLINED CONVEYOR

INCLINED CONVEYOR

ILLUS. PL-55966	PART NO.	NAME OF PART	AMT.
1	00-041469	Cover - Back	1
2	SC-093-23	Mach. Screw 10-24 x 3/8 Phil. Pan Hd	2
3	00-205878	Fastener - Tinnerman 10-24	2
4	00-041468	Support - Flat Belt	5
5	SC-093-23	Mach. Screw 10-24 x 3/8 Phil. Pan Hd	10
6	WL-006-07	Lockwasher #10 Helical (SST)	10
7	00-042553	Belt - Conveyor (Incls. Corrugated Pins)	5
8	00-041952	Frame - Side (RH)	1
9	00-041357	Conveyor Roller Assy	6
10	SC-121-61	Mach. Screw 1/4-20 x 5/8 Hex Washer Hd., Whiz-Lock	6
11	00-041439	Spacer - Belt Support	2
12	WS-003-49	Washer 0.266 x 0.563 x 0.062 (SST)	1
13	SC-093-23	Mach. Screw 10-24 x 3/8 Phil. Pan Hd	6
14	00-205878	Fastener - Tinnerman 10-24	6
15	00-041470	Cover - Front	1
16	SC-093-23	Mach. Screw 10-24 x 3/8 Phil. Pan Hd	2
17	00-205878	Fastener - Tinnerman 10-24	2
18	00-041436	Plate - Roller Support	2
19	00-048090-00002	Protector - Edge	12
20	00-041953	Frame - Side (LH)	1
21	00-044619	Frame - Conveyor (Specify Serial Number)	1
22	00-041479	Idler Roller Assy	1
23	00-041441	Shaft - Idler	1
24	RR-004-05	Retaining Ring	2
25	00-041456	Guide Roller Assy	1
26	00-041441	Shaft - Idler	1
27	RR-004-05	Retaining Ring	2
28	00-041444	Take-Up Arm Assy	2
29	00-041443	Roller - Take-Up	1
30	00-041465	Chain Cover Assy	1
31	00-041487	Chain - Conveyor Drive	AR
32	00-087165	Link - Chain Connector	AR
33	00-041478	Sprocket - Drive (32T)	1
34	SC-047-72	Set Screw 1/4-20 x 3/8 Hex Hdls., Cup Pt	4
35	00-130414	Bearing	2
36	00-041460	Drive Roller Assy. (Incls. Item 34)	1
37	00-041459	Shaft - Drive Roller	1
38	00-133231	Sprocket 12T	1
39	SC-047-72	Set Screw 1/4-20 x 3/8 Hex Hdls., Cup Pt	1
40	00-130439	Roller - Spring	1
41	00-041464	Bracket - Conveyor Connection	1
42	00-041415	Block - Popout	2
43	SC-121-61	Mach. Screw 1/4-20 x 5/8 Hex Washer Hd., Whiz-Lock	2
44	NS-038-04	Lock Nut 1/4-20 Hex	2
45	SC-121-61	Mach. Screw 1/4-20 x 5/8 Hex Washer Hd., Whiz-Lock	2
46	NS-038-04	Lock Nut 1/4-20 Hex	2
47	SC-037-71	Cap Screw 3/8-16 x 3/4 Hex Hd	4
48	WL-004-06	Lockwasher 3/8 Helical	4
49	NS-013-25	Nut 3/8-16 Hex	4
50	SC-121-61	Mach. Screw 1/4-20 x 5/8 Hex Washer Hd., Whiz-Lock	2
51	NS-038-04	Lock Nut 1/4-20 Hex	2
52	00-041447	Conveyor Support Assy	1
53	SC-121-61	Mach. Screw 1/4-20 x 5/8 Hex Washer Hd., Whiz-Lock	2
54	NS-038-04	Lock Nut 1/4-20 Hex	2
55	00-041473	Brace - Lower Support	1

INCLINED CONVEYOR

ILLUS. PL-55966	PART NO.	NAME OF PART	AMT.
56	00-041494	Standoff Cover (Use W/HPA)	4
57	SC-121-61	Mach. Screw 1/4-20 x 5/8 Hex Washer Hd., Whiz-Lock	4
58	00-041475	Bearing Block Assy	2
59	00-041429	Drive Pulley Assy. (Incls. Item 60)	1
60	SC-047-75	Set Screw 1/4-20 x 1/4 Soc. Hdls., Cup Pt	1
61	00-041440	Shaft - Drive	1
62	00-041426	Pulley - Drive	1
63	SC-047-75	Set Screw 1/4-20 x 1/4 Soc. Hdls., Cup Pt	1
64	00-041463	Stop - Pkg	1
65	SC-121-61	Mach. Screw 1/4-20 x 5/8 Hex Washer Hd., Whiz-Lock	2

NOTES

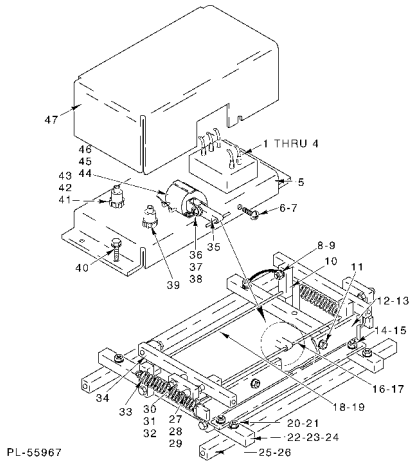

LINK ASSEMBLY

LINK ASSEMBLY

ILLUS. PL-55967	PART NO.	NAME OF PART	AMT.
1	00-049837	Resistor Assy	1
2	00-041481	Timer - Solid State	1
3	SC-081-44	Mach. Screw 10-32 x 1 1/2 Rd. Hd	2
4	NS-031-49	Stop Nut 10-32 Hex (SST)	2
5	00-041471	Plate - Switch Mounting	1
6	00-205878	Fastener - Tinnerman 10-24	1
7	SC-093-23	Mach. Screw 10-24 x 3/8 Phil. Pan Hd	1
8	00-041453	Sleeve - Lift Arm	8
9	SC-121-62	Mach. Screw 1/4-20 x 1 Hex Washer Hd., Whiz-Lock	8
10	00-041457	Link - Platform Lift	10
11	00-041480	Ground Wire Assy	1
12	00-041957	Bracket - Platform Stop	1
13	00-178667	Foot - Rubber	2
14	SC-112-42	Mach. Screw 6-32 x 1/2 Phil. Pan Hd	2
15	NS-031-03	Stop Nut 6-32 Hex Special	2
16	00-041451	Shaft - Platform	1
17	RR-009-10	Retaining Ring 3/8 In. (SST)	2
18	00-041452	Shaft - Platform	1
19	RR-009-10	Retaining Ring 3/8 In. (SST)	2
20	SC-121-62	Mach. Screw 1/4-20 x 1 Hex Washer Hd., Whiz-Lock	4
21	00-041435	Spacer - Lower Pivot	2
22	00-086962	Clamp - Loop	1
23	SC-093-23	Mach. Screw 10-24 x 3/8 Phil. Pan Hd	1
24	NS-031-15	Stop Nut - 10-24 Hex Special (SST)	1
25	00-041434	Spacer - Lower Wall	2
26	SC-121-62	Mach. Screw 1/4-20 x 1 Hex Washer Hd., Whiz-Lock	4
27	00-041446	Bushing - Arm	4
28	SC-121-62	Mach. Screw 1/4-20 x 1 Hex Washer Hd., Whiz-Lock	4
29	RR-009-10	Retaining Ring 3/8 In. (SST)	4
30	00-041428	Link - Connector	2
31	00-041498	Bearing - Nyliner	2
32	SC-047-72	Set Screw 1/4-20 x 3/8 Hex Hdls., Cup Pt	2
33	00-175856	Spring - Pull Down	2
34	00-041437	Spacer - Roller Plate	2
35	00-049820	Link - Solenoid	1
36	00-049821	Spacer - Solenoid Link	1
37	SC-081-44	Mach. Screw 10-32 x 1 1/2 Rd. Hd	1
38	NS-031-49	Stop Nut 10-32 Hex (SST)	1
39	00-041483	Switch Cord Assy	1
40	SC-121-62	Mach. Screw 1/4-20 x 1 Hex Washer Hd., Whiz-Lock	4
41	00-041519	Power Cord Assy	1
42	FE-022-84	Connector - Strain Relief	1
43	FE-006-07	Lock Nut 1/2 (Cnd.)	1
44	00-041539	Solenoid	1
45	SC-093-23	Mach. Screw 10-24 x 3/8 Phil. Pan Hd	2
46	NS-031-15	Stop Nut - Special 10-24 Hex (SST)	2
47	00-041472	Cover - Switch Plate	1

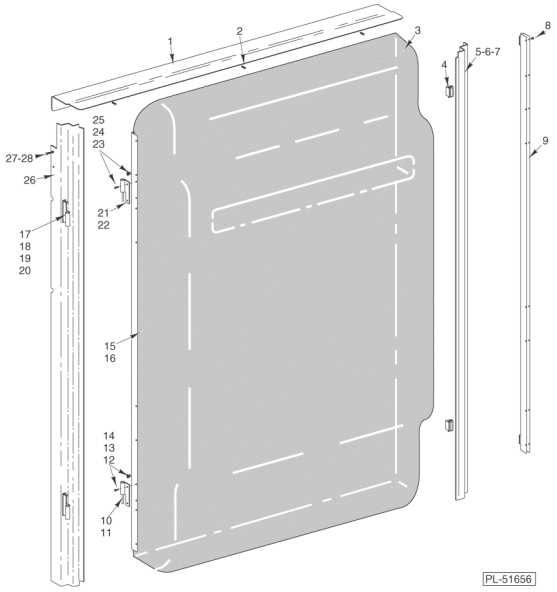

FILM ACCESS DOOR

FILM ACCESS DOOR

ILLUS. PL-51656	PART NO.	NAME OF PART	AMT.
1	00-043460	Strip - Top Trim	1
2	SD-024-18	Self-Tapping Screw 10-24 x 1/2 Hex Hd., Type TT	3
3	00-043466	Door - Film Access	1
4	00-041725	Catch - Magnet	2
5	00-043459	Stop - Door	1
6	SC-121-61	Mach. Screw 1/4-20 x 5/8 Hex Washer Hd., Whiz-Lock	2
7	WL-003-12	Lockwasher #8 Helical	2
8	00-043465	Rivet - Push	12
9	00-043469	Door Strip Assy	1
10	00-043457	Hinge - Male RH Bottom	1
11	00-043474	NLA - Obsolete--Hinge - Male LH Bottom	1
12	SC-110-31	Mach. Screw 10-24 x 3/4 Hex Hd	2
13	WS-029-79	Washer (SST)	2
14	NS-038-13	Lock Nut 10-24 Hex	2
15	00-043467	Strip - Door Edge	1
16	00-043465	Rivet - Push	8
17	00-043458	Hinge - Female (RH)	2
18	00-043475	Hinge - Female (LH)	2
19	SC-110-87	Mach. Screw 10-32 x 1/4 Phil. Pan Hd	4
20	WL-006-07	Lockwasher #10 Helical (SST)	4
21	00-043456	Hinge - Male RH Top	1
22	00-043473	NLA - Obsolete--Hinge - Male LH Top	1
23	SC-110-31	Mach. Screw 10-24 x 3/4 Hex Hd	2
24	WS-029-79	Washer (SST)	2
25	NS-038-13	Lock Nut 10-24 Hex	2
26	00-043459	Stop - Door	1
27	SC-121-61	Mach. Screw 1/4-20 x 5/8 Hex Washer Hd., Whiz-Lock	2
28	WL-003-12	Lockwasher #8 Helical	2

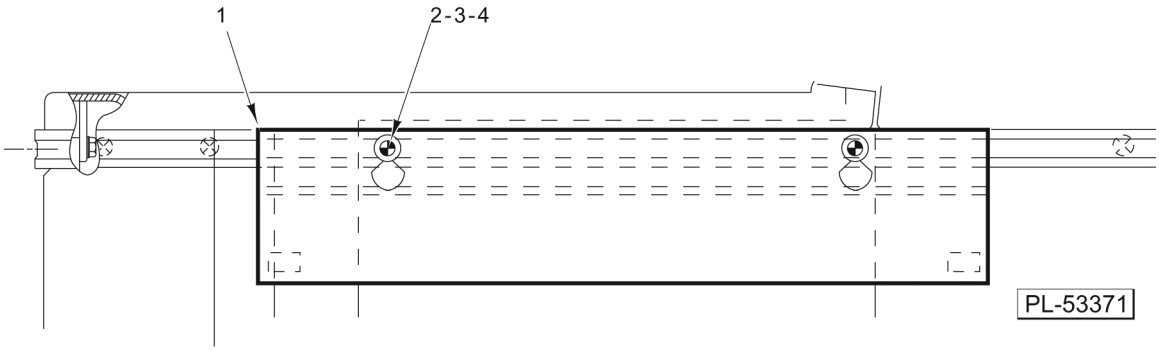

SUPPLY HOLDER (OPTIONAL)

SUPPLY HOLDER (OPTIONAL)

ILLUS. PL-53371	PART NO.	NAME OF PART	AMT.
1	00-047367	Holder Assy. - Supplies	1
2	00-047567	Retainer - Holder	2
3	SC-018-74	Mach. Screw 10-24 x 3 Phil. Pan Hd	2
4	NS-048-07	Lock Nut - Special 10-24 Hex	2
	00-047608	Kit Supply Holder (Incls. Items 1 thru 4)	1

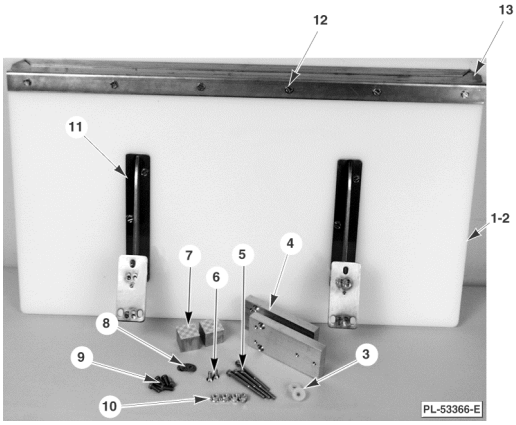

SIDE SHELF KIT (OPTIONAL)

SIDE SHELF KIT (OPTIONAL)

ILLUS. PL-53366E	PART NO.	NAME OF PART	AMT.
1	00-440727	Shelf - Platter (29.625 In.)	1
2	00-184133	Shelf - Platter (23.625 In.)	1
3	00-184135	Spacer - Hinge Block	2
4	00-184134	Block - Hinge Mounting	2
5	SC-124-51	Cap Screw 10-24 x 2 1/4 Soc. Hd	4
6	SC-022-19	Mach. Screw 10-24 x 1/2 Slotted Flat Hd. (SST)	2
7	00-334738	Pad - Support Assy	2
8	WS-019-06	Washer	6
9	SC-067-07	Mach. Screw 10-24 x 1/2 Hex Hd. SST	6
10	NS-038-13	Lock Nut - Special 10-24 Hex	4
11	00-184132	Hinge - Shelf	2
12	SD-034-21	Self-Tapping Screw 10-16 x 1/2 Hex Washer Hd., Type AB	12
13	00-440728	Ground - Shelf Edge (29.625 In.)	1
	00-184138	Kit - Side Shelf (Incls. Items 1 & 3 thru 13)	1
	00-440960	Shelf Assy. (29.625 In.) (Incls. Items 1, 11, 12, & 13)	AR

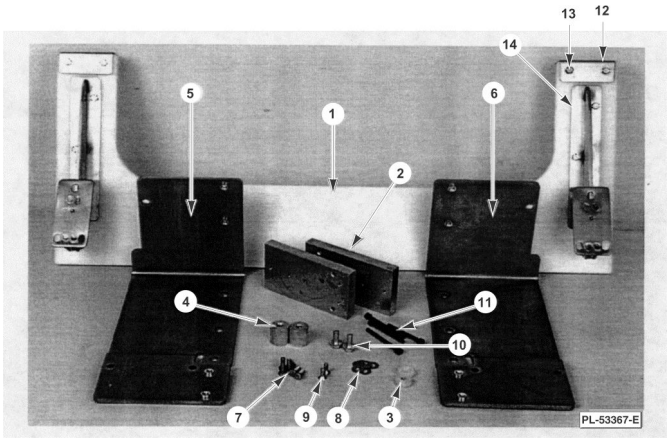

FRONT SHELF KIT (OPTIONAL)

FRONT SHELF KIT (OPTIONAL)

ILLUS. PL-53367E	PART NO.	NAME OF PART	AMT.
1	00-00-047009	Shelf - Platter Assy. (Incls. Items 12, 13, & 14)	1
2	00-047003	Block - Hinge Mounting	2
3	00-184135	Spacer - Hinge Block	2
4	00-047004	Pad - Support Assy	2
5	00-047843	Bracket (LH)	1
6	00-047844	Bracket (RH)	1
7	SC-067-07	Mach. Screw 10-24 x 1/2 Hex Hd. (SST)	6
8	WS-019-06	Washer	6
9	SC-022-19	Mach. Screw 10-24 x 1/2 Slotted Flat Hd. (SST)	2
10	SC-123-92	Mach. Screw 1/4-20 x 5/8 Special Hex Washer Hd	2
11	SC-124-51	Cap Screw 10-24 x 2 1/4 Soc. Hd	4
12	00-047014	Guard - Shelf Edge	2
13	SD-034-21	Self-Tapping Screw 10-16 x 1/2 Hex Washer Hd., Type AB	10
14	00-184132	Hinge - Shelf	2
	00-047005	Kit - Front Shelf (Incls. Items 1 thru 3 & 7 thru 11)	2

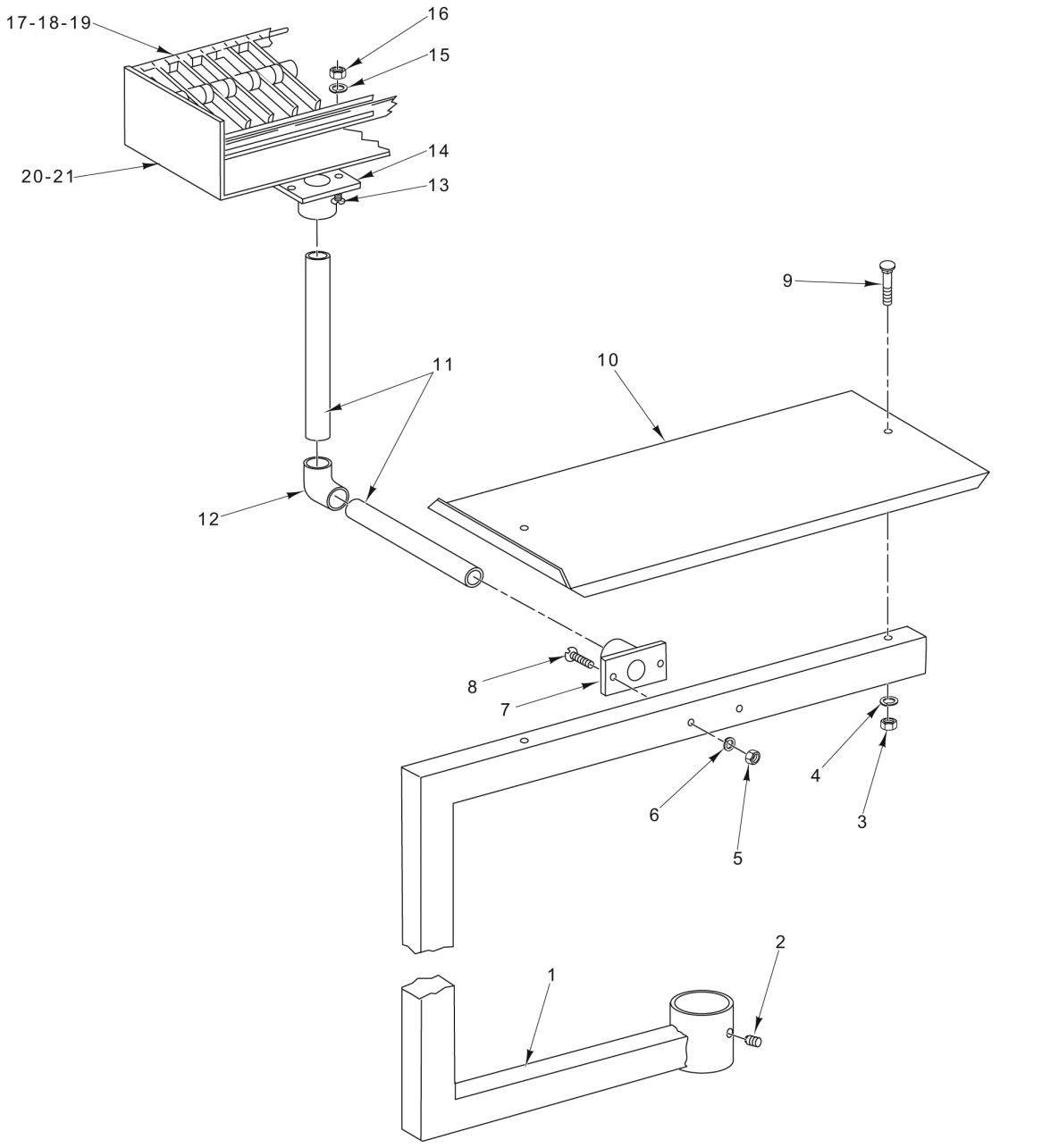

MISCELLANEOUS LISTING

MISCELLANEOUS LISTING

ILLUS. PL-55587	PART NO.	NAME OF PART	AMT.
	00-180029-00025	Lubricant & Container (Lubriplate FP-150L)	1
	00-520228	Adhesive Loctite 242	1
	00-542689	Tape - Red (1/2 In. x 36 Yd. Roll, 5 Mil Thk.)	1
	00-333591	Card - Water Shield Instructions	1
	00-441613	Water Shield (84 In. x 170 In.)	1
	00-183934-00001	Tube - Plastic Shrinkable 0.047 I.D. x 4 ft. (Cut to Length)	AR
	00-183934-00002	Tube - Plastic Shrinkable 0.063 I.D. x 4 ft. (Cut to Length)	AR
	00-183934-00004	Tube - Plastic Shrinkable 0.125 I.D. x 4 ft. (Cut to Length)	AR
	00-183934-00005	Tube - Plastic Shrinkable 0.188 I.D. x 4 ft. (Cut to Length)	AR
	00-183934-00007	Tube - Plastic Shrinkable 0.375 I.D. x 4 ft. (Cut to Length)	AR
	00-183934-00008	Tube - Plastic Shrinkable 0.500 I.D. x 4 ft. (Cut to Length)	AR
	00-183934-00009	Tube - Plastic Shrinkable 0.750 I.D. x 4 ft. (Cut to Length)	AR
	00-183934-00010	Tube - Plastic Shrinkable 1.000 I.D. x 4 ft. (Cut to Length)	AR
	00-544692	Tri-Flo Lube (2 Oz. Squeeze Bottle)	1
	00-102714	Brush - Cleaning	1
	00-520478-00002	Lubricant - Grease (14 Oz. Cartridge)	AR
	00-547240	Cleaner (Blue Shower)	AR
	00-041753	Clock Alignment Tool	1
	00-102973-00085	Lubriplate (2 Oz.) (FMO-200-AW)	AR
	00-102973-00009	Duoprime Oil 90 (4 Oz.)	AR
	00-102973-00084	Mobil HD 80W-90 (16 Oz.)	AR