# INSTRUCTION MANUAL

## . . . *with Catalog of Replacement Parts*

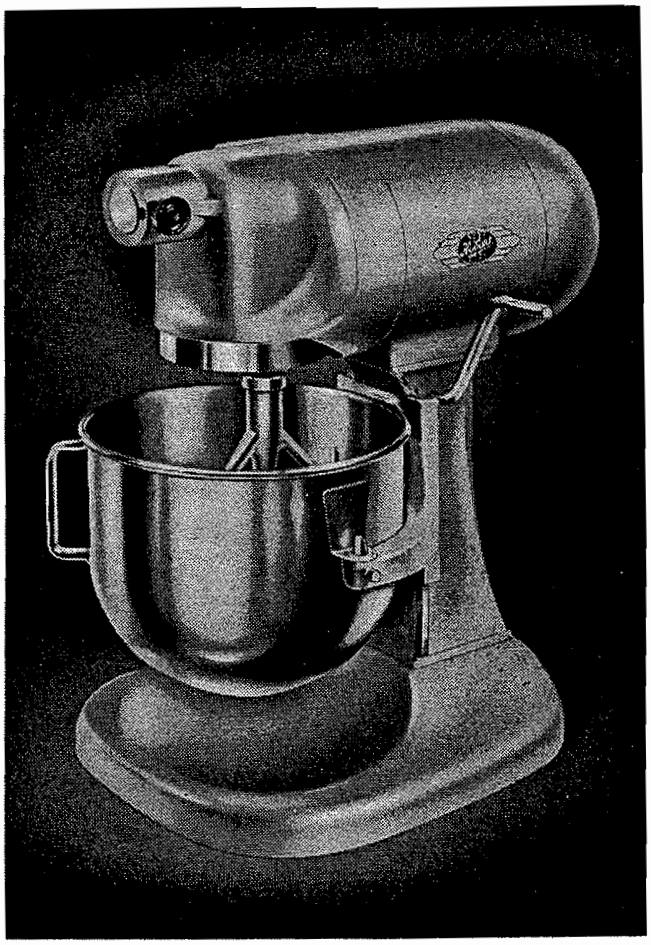

# HOBART

## MODEL N-50 MIXER

M/L #4749

HOBART

*The World's Oldest and Largest Manufacturer of Computing Scales and Food Store, Kitchen, Bakery and Dishwashing Machines*

**THE HOBART MANUFACTURING COMPANY** TROY, OHIO

FORM 5682-M (Revised Jan. 1967) (Supersedes Form 5682-L, April 1966)

## INSTALLATION DIAGRAM

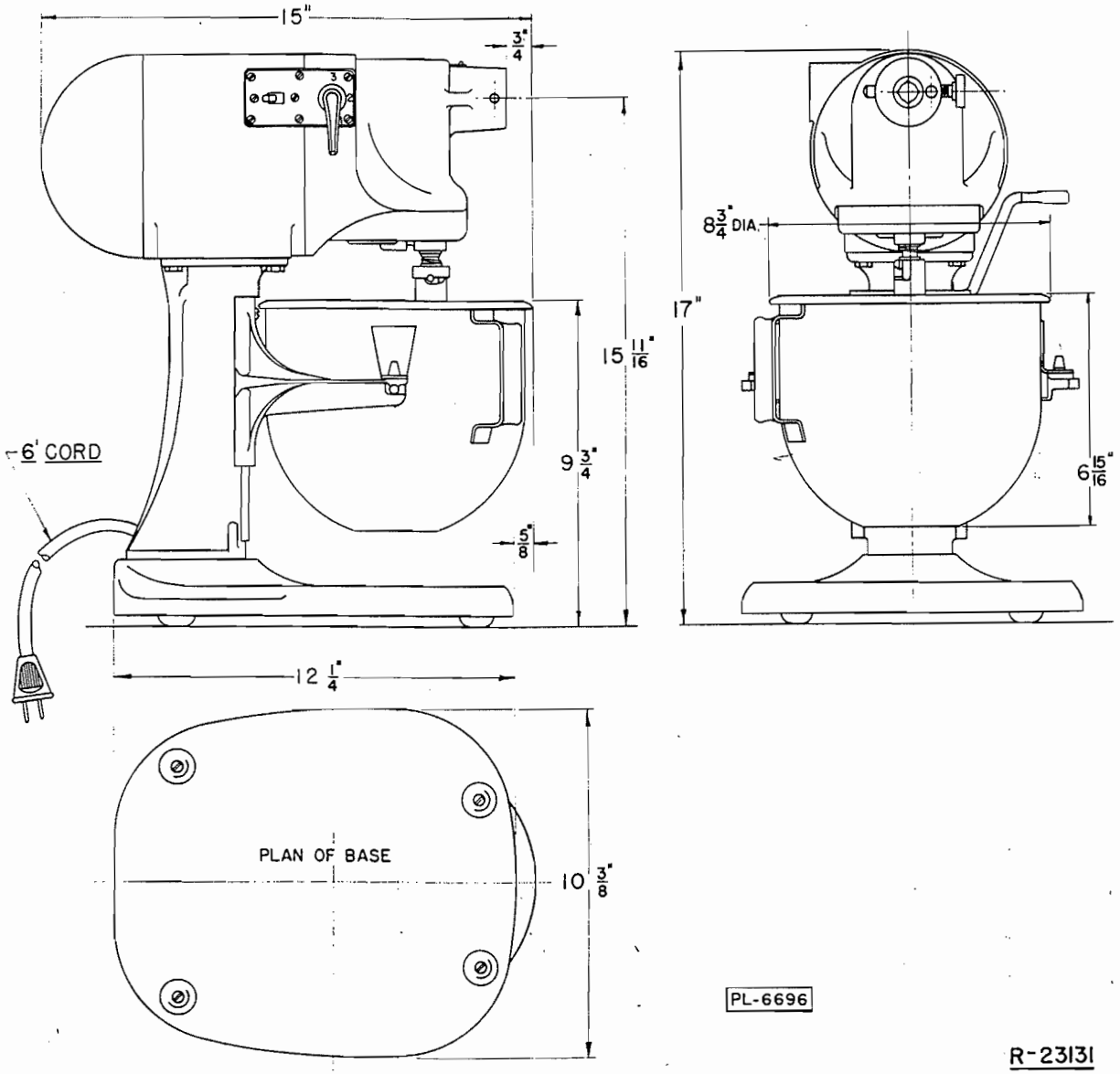


# Instructions For Model N-50 HOBART LABORATORY MIXER

**CONNECTIONS:**
Before plugging into a socket the first time, make sure that the electrical specifications of the line are the same as called for on the name plate (C, Fig. 1).

**If cord and plug is not used with this machine, electrical connections should be made by qualified workmen who will observe all applicable Safety Codes and the National Electrical Code.**

**LUBRICATION:**
Very little lubrication is required. Once a month put three drops of oil in the oiler (A, Fig. 1) at the back of the motor, and a like amount in oiler (E, Fig. 1) on the attachment hub.

The transmission gearing is lubricated by a special grease that will last for several years of normal use. Consult a Hobart service technician before adding grease.

After using the machine for a year or two, have the service technician lower the planetary and grease the teeth of the internal gear. The planetary is held to its shaft by a taper pin (B, Fig. 1).

**SPEED CHANGING:**
There are three speeds. To change from one speed to another, switch off the motor and move the Gear-shift Handle to the required number. As shown in Fig. 1, the handle is set for No. 1 or slow speed. The Gear-shift Handle is interlocked with the switch so that it can be moved only when the switch handle is at "OFF".

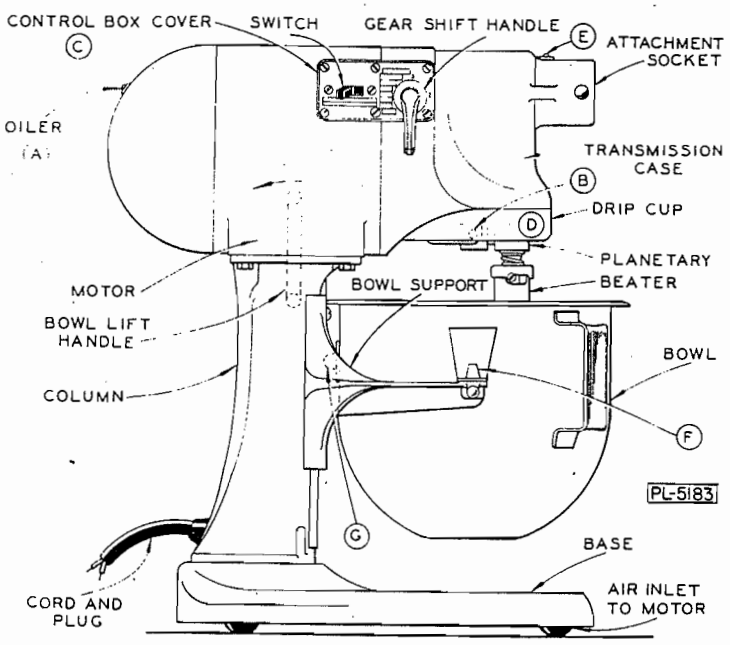


FIG. 1

**BOWL:**
To put on the bowl, first locate the back bowl pin (G, Fig. 1) in its proper place, then snap down the bowl locating lugs over the bowl retaining pins (F, Fig. 1).

**AGITATORS:**
Agitators are available in various designs to suit the class of work to be performed. See Fig. 2.

**FLAT BEATER - B —**
For mixing batters, mashing potatoes, and general purpose creaming.

**WIRE LOOP WHIP - D —**
For beating eggs, whipping cream, and all light, fast work.

**DOUGH HOOK - E —**
For kneading coffee cake, roll dough, and the heavier yeast raised work. Use on No. 1 speed.

**PASTRY KNIFE - PK —**
For biscuits, pie crust, short cake, and pastry with shortening content.

**BOWL LIFT:**
Move the bowl-lift handle back as shown by the arrow in Fig. 1 to lower the bowl for changing agitators. Lowering also makes the bowl more accessible for filling.

To mash potatoes, or cream butter, start with the bowl down and raise it slowly into working position as the materials break up.

**ATTACHMENTS:**
Among the attachments available for this machine are:

Meat Chopper
Vegetable Slicer
Shredder
Ice Chipper
Splash Cover
Salad Oil Dropper
Colander Outfit
Pouring Chute
Ice Jacket

NOTE: Motor parts are listed on separate Motor Parts Sheet.

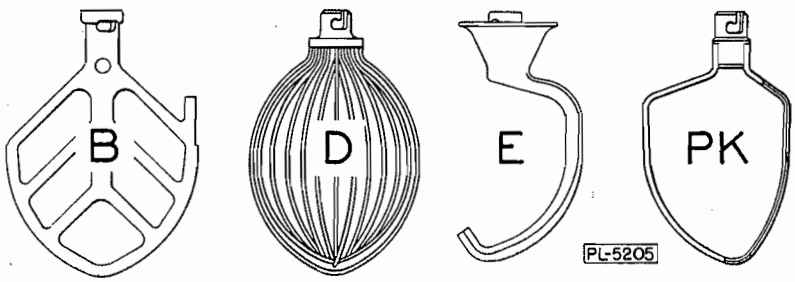


FIG. 2

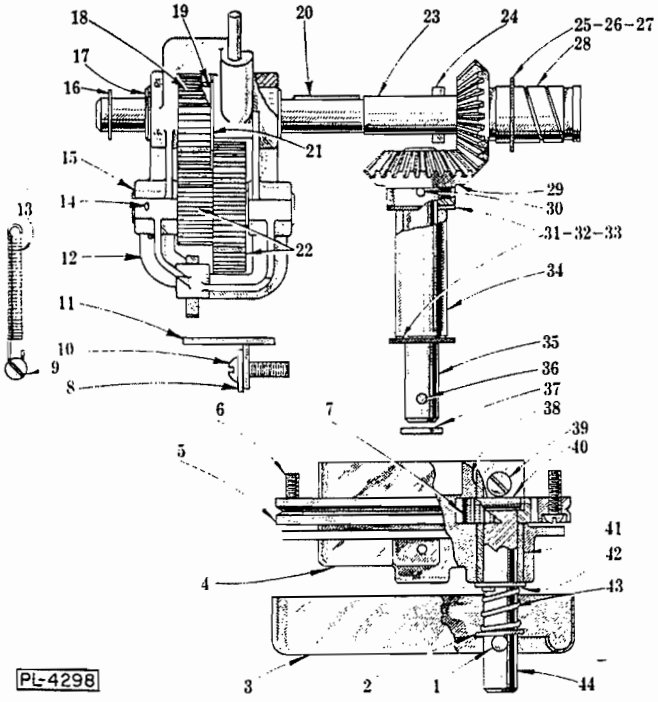


# PLANETARY, TUMBLER AND AGITATOR SHAFT UNIT

| ILLUS. PL-4298 | PART NO. | NAME OF PART | AMT. |
|---|---|---|---|
| 1 | PG-6-11 | Groov-Pin - Type #4, 1/4" x 5/8" | 1 |
| 2 | WS-7-21 | Washer | 1 |
| 3 | P-21625-3 | Cup - Drip | 1 |
| 4 | P-9028-4 | Planetary | 1 |
| 5 | M-5428 | Gear - Internal (59T) | 1 |
| 6 | SC-9-25 | Mach. Screw - #10-24 x 5/8" Rd. Hd. | 4 |
| 7 | V-5987 | Pinion - Agitator Shaft (18T) | 1 |
| 8 | WS-3-7 | Washer | 1 |
| 9 | SC-13-26 | Mach. Screw - #8-32 x 3/8" Flat Hd. | 1 |
| 10 | SC-8-51 | Mach. Screw - #12-24 x 3/4" Rd. Hd. | 1 |
| 11 | M-9090 | Stop - Tumbler Yoke | 1 |
| 12 | R-9027 | Yoke - Tumbler | 1 |
| 13 | M-10973 | Spring - Tumbler Yoke | 1 |
| 14 | PC-3-36 | Cotter Pin - 3/32" x 1" | 1 |
| 15 | V-9052 | Shaft - Tumbler | 1 |
| 16 | WS-8-2 | Washer | 1 |
| 17 | M-9050 | Sleeve - Shifter | 1 |
| 18 | M-9048 | Gear - Transmission (31T) | 1 |
| 19 | R-12430-22 | Key | 1 |
| 20 | R-12430-23 | Key - Trans. Shaft (Upper) | 1 |
| 21 | V-9051 | Retainer - Shifter Sleeve | 1 |
| 22 | M-9047 | Transmission Gear Assy. (15T & 31T) | 1 |
| 23 | M-9075 | Shaft - Trans. (Upper) | 1 |
| 24 | P-11800-187 | Dowel | 1 |
| 25 | WS-12-12 | Washer - Thrust (.008" Thk.) | As Reqd. |
| 26 | WS-12-13 | Washer - Thrust (1/64" Thk.) | As Reqd. |
| 27 | WS-12-15 | Washer - Thrust (1/16" Thk.) | As Reqd. |
| 28 | M-20662 | Gear - Zerol Bevel (23T) | 1 |
| 29 | M-20661 | Gear - Zerol Bevel (23T) | 1 |
| 30 | PT-3-40 | Taper Pin - #2 x 1" Lg. | 1 |
| 31 | WS-7-24 | Washer - Thrust (.008" Thk.) | As Reqd. |
| 32 | WS-7-26 | Washer - Thrust (1/32" Thk.) | As Reqd. |
| 33 | WS-7-28 | Washer - Thrust (1/16" Thk.) | As Reqd. |
| 34 | V-9039 | Bearing - Planetary Shaft | 1 |
| 35 | M-9040 | Shaft - Planetary | 1 |
| 36 | PT-3-29 | Taper Pin - #1 x 1" Lg. | 1 |
| 37 | V-4378 | Washer - Cupped | 1 |
| 38 | V-7595 | Bearing - Upper Planetary | 1 |
| 39 | V-7602 | Screw - Brg. Ret. | 1 |
| 40 | V-5988 | Pin - Agitator Shaft | 1 |
| 41 | V-9038 | Bearing - Lower Planetary | 1 |
| 42 | WS-8-2 | Washer | 1 |
| 43 | V-17078 | Spring | 1 |
| 44 | M-61473 | Agitator Shaft Sub Assy. (Incls. item #1) | 1 |
| | M-74676 | Tumbler Yoke & Gear Sub-Assy. (Incls. items #12, 14, 15, 16, 17, 18, 19, 21 & 22) | 1 |
| | M-74677 | Planetary, Gear, Shaft & Brg. Sub-Assy. (Incls. items #2, 4, 7, 37, 38, 39, 40, 41, 42, 43 & 44) | 1 |

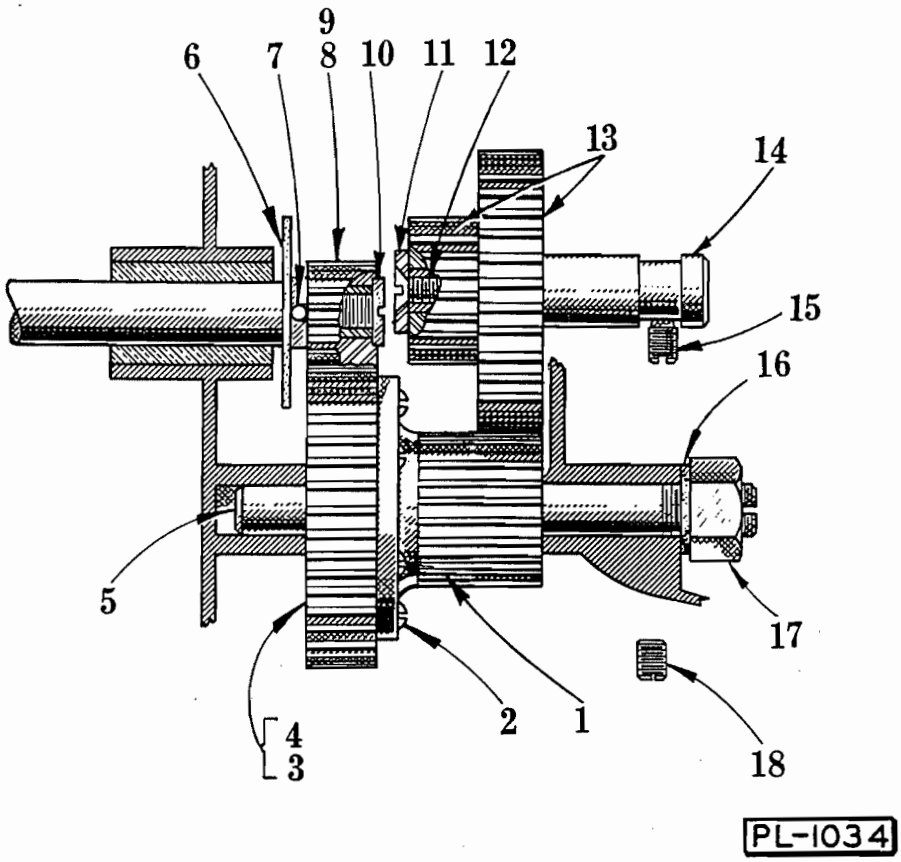


## TRANSMISSION GEAR UNIT

| ILLUS. PL-1034 | PART NO. | NAME OF PART | AMT. |
|---|---|---|---|
| 1 | M-17864 | Flange Ring & Hub Assy. | 1 |
| 2 | SC-7-42 | Mach. Screw - #8-32 x 1/2" Rd. Hd. | 6 |
| 3 | M-9392 | Gear - Main Drive (49T) (60 Cy.) | 1 |
| 4 | M-16758 | Gear - Main Drive (47T) (25-50 Cy.) | 1 |
| 5 | M-9088 | Shaft - Eccentric | 1 |
| 6 | M-16747 | Plate - Baffle | 1 |
| 7 | V-16777 | Pin | 1 |
| 8 | M-9421 | Pinion - Motor (15T) (60 Cy.) | 1 |
| 9 | M-16759 | Pinion - Motor (17T) (25-50 Cy.) | 1 |
| 10 | V-5247-2 | Screw - Pinion Ret. | 1 |
| 11 | V-9042 | Washer - Ret. | 1 |
| 12 | SC-13-48 | Mach. Screw - #10-24 x 1/2" Flat Hd. | 1 |
| 13 | M-9047 | Transmission Gear Assy. (15T & 31T) | 1 |
| 14 | V-9043 | Shaft - Transmission (Lower) | 1 |
| 15 | SC-46-27 | Set Screw - 1/4"-20 x 1/4" Hdls. Cup Pt. | 1 |
| 16 | V-6021 | Washer | 1 |
| 17 | NS-13-22 | Full Nut - 3/8"-16 Hex Fin. | 1 |
| 18 | SC-46-27 | Set Screw - 1/4"-20 x 1/4" Hdls. Cup Pt. | 1 |

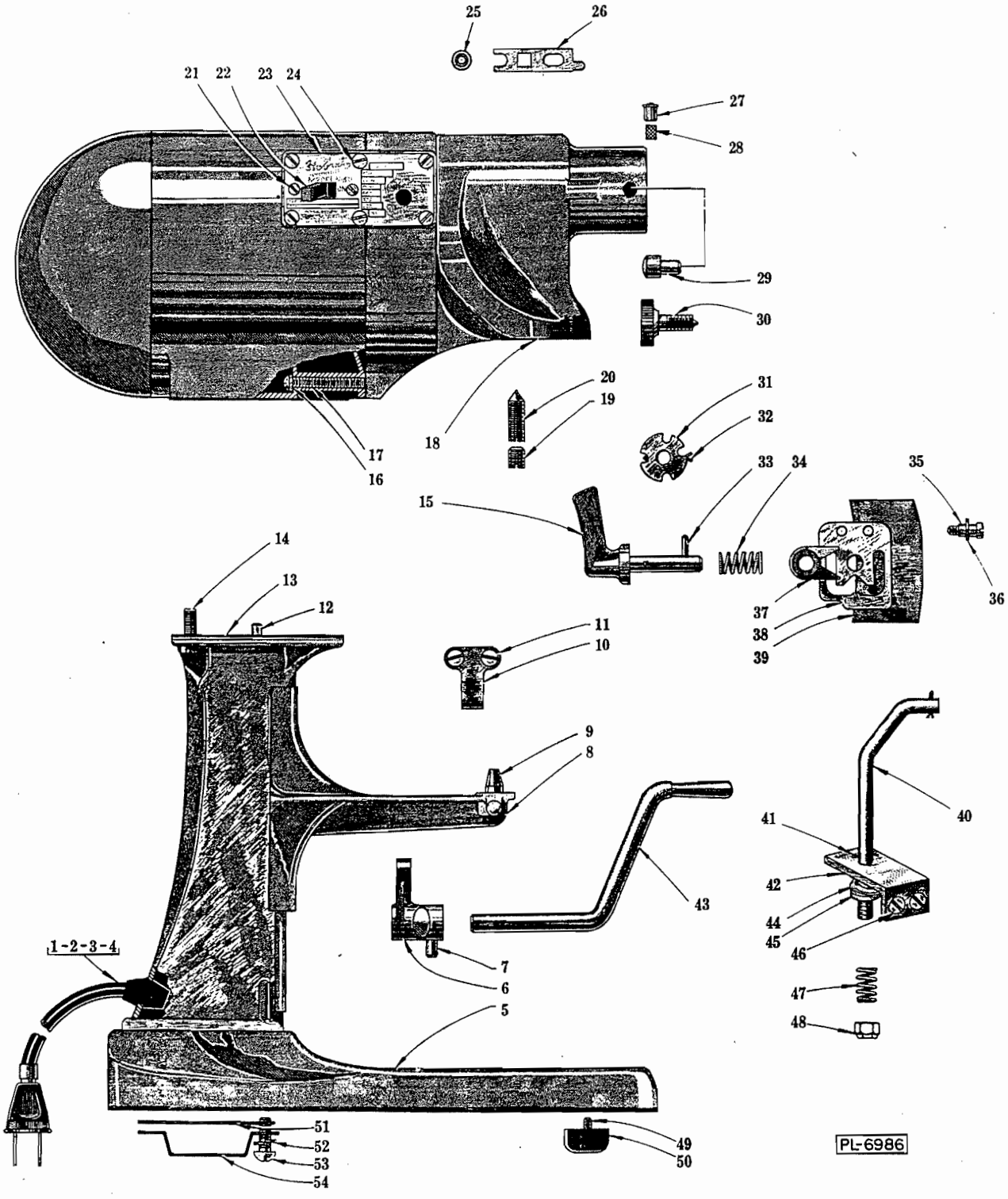


## COLUMN AND BASE UNIT

# COLUMN AND BASE UNIT

| ILLUS. PL-6986 | PART NO. | NAME OF PART | AMT. |
|---|---|---|---|
| 1 | M-63710-1 | Cord & Plug (2 Cond., Under 125 V.) | 1 |
| 2 | M-63710-2 | Cord & Plug (2 Cond., 200-250 V.) | 1 |
| 3 | M-63710-3 | Cord & Plug (3 Cond., Under 150 V.) | 1 |
| 4 | M-63710-4 | Cord & Plug (3 Cond., 200-250 V.) | 1 |
| 5 | S-9067-1 | Base | 1 |
| 6 | M-9086 | Arm - Bowl Lift | 1 |
| 7 | PT-3-39 | Taper Pin - #2 x 3/4" Lg. | 1 |
| 8 | M-24881-1 | Bowl Support Sub-Assy. Unit (Incls. item #9) | 1 |
| 9 | V-4821 | Pin - Bowl Retaining | 2 |
| 10 | V-9083 | Latch - Spring | 1 |
| 11 | SC-7-72 | Mach. Screw - #10-24 x 1/4" Rd. Hd. | 2 |
| 12 | P-11800-215 | Dowel | 2 |
| 13 | S-78814-1 | Column | 1 |
| 14 | SC-62-63 | Fin. Bolt - 5/16"-18 x 3/4" Hex Hd. | 4 |
| 15 | P-10684-1 | Handle - Shifter | 1 |
| 16 | WS-2-30 | Washer | 7 |
| 17 | SC-8-58 | Mach. Screw - #12-24 x 2-3/4" Rd. Hd. | 7 |
| 18 | M-61064-1 | Trans. Case & Attach. Pin Sub-Assy. Unit (Incls. items #29 & Part V-9039 (Pg. 4)) | 1 |
| 19 | SC-46-52 | Set Screw - 5/16"-18 x 3/8" Hdls. Cup Pt. | 1 |
| 20 | V-9094 | Screw - Adj. | 1 |
| 21 | SC-16-16 | Mach. Screw - #4-36 x 3/8" Oval Hd. | 2 |
| 22 | P-87711-12-1 | Switch (125-250 V.) | 1 |
| 23 | P-85093-3 | Mach. Data Plate & Control Box Cover (~~Give Serial No. & Elec. Spec.~~) | 1 |
| 24 | SC-15-10 | Mach. Screw - #6-32 x 3/8" Oval Hd. | 6 |
| 25 | V-9056 | Disc - Guide | 2 |
| 26 | V-9057 | Plunger - Interlock | 1 |
| 27 | OG-3-28 | Oiler | 1 |
| 28 | WF-2-8 | Wicking - 5/32" x 3/8" Lg. | 1 |
| 29 | V-5479 | Pin - Attachment Hub Support | 1 |
| 30 | M-16740 | Thumb Screw | 1 |
| 31 | V-9059 | Disc - Interlock | 1 |
| 32 | PC-3-50 | Cotter Pin - 7/64" x 1" | 1 |
| 33 | P-11800-19 | Dowel | 1 |
| 34 | V-7433 | Spring | 1 |
| 35 | V-9091 | Retaining Screw - Cam Plate | 2 |
| 36 | WL-3-28 | Lock Washer - #12 x .062" x .047" | 2 |
| 37 | V-10335 | Fork - Shifter | 1 |
| 38 | M-9062 | Plate - Cam | 1 |
| 39 | V-11019 | Strip - Insulating | 1 |
| 40 | M-9085 | Rod - Bowl Lift | 1 |
| 41 | PC-3-32 | Cotter Pin - 3/32" x 1/2" | 2 |
| 42 | M-9080-1 | Bracket - Bowl Lift | 1 |
| 43 | M-9079-1 | Handle - Bowl Lift | 1 |
| 44 | V-9236 | "V" Washer | 1 |
| 45 | WS-3-23 | Washer | 1 |
| 46 | SC-13-48 | Mach. Screw - #10-24 x 1/2" Flat Hd. | 2 |
| 47 | V-9237 | Spring | 1 |
| 48 | NS-31-23 | Stop Nut - 1/4"-28 "Elastic" | 1 |
| 49 | SC-7-42 | Mach. Screw - #8-32 x 1/2" Rd. Hd. | 4 |
| 50 | V-13983-1 | Foot - Base | 4 |
| 51 | M-78815 | Screen - Air | 1 |
| 52 | WL-3-43 | Lock Washer - 5/16" x .117" x .056" | 4 |
| 53 | SC-8-88 | Mach. Screw - 5/16"-18 x 3/4" Rd. Hd. | 4 |
| 54 | M-16742 | Shield - Base | 1 |
| | FE-6-29 | Connector - Wire (Not Shown) | 2 |

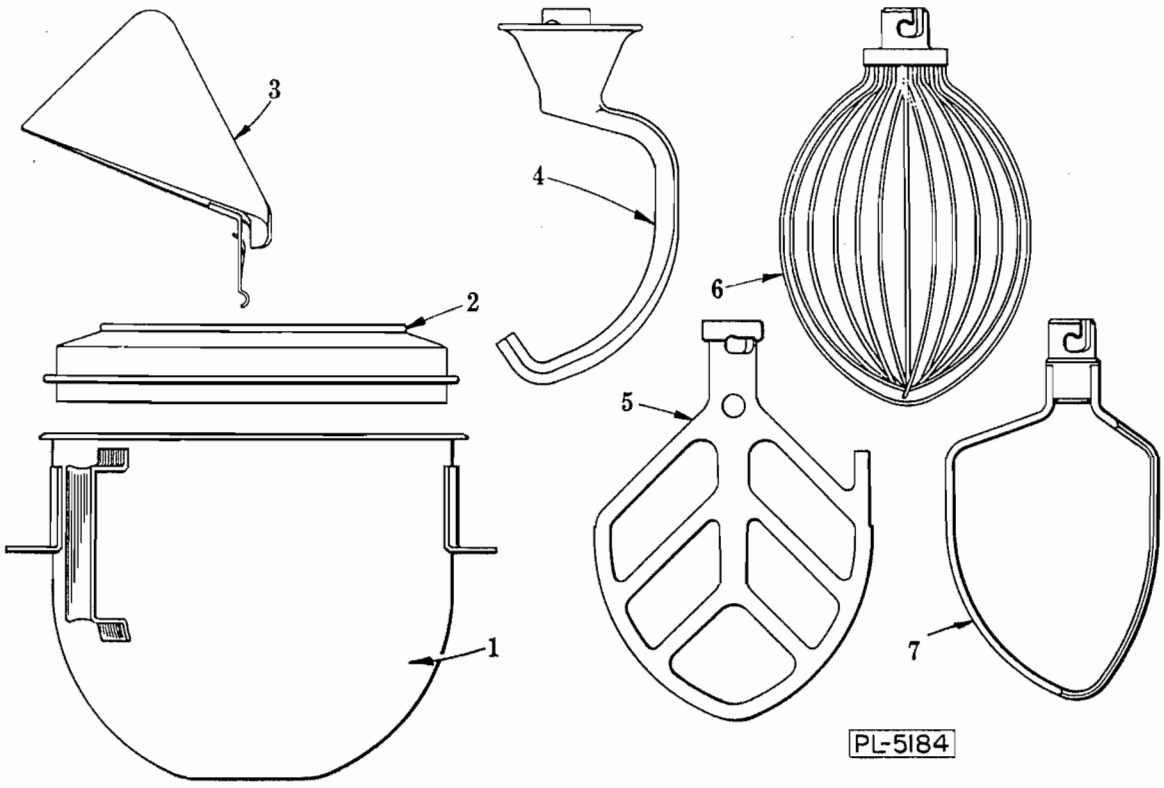


## BOWL AND AGITATOR UNIT

| ILLUS. PL-5184 | PART NO. | NAME OF PART | AMT. |
|---|---|---|---|
| 1 | S-78575-2 | Bowl - 5 Qt. (SST) | 1 |
| 2 | P-66805 | Cover - Splash | 1 |
| 3 | R-16769 | Chute - Bowl | 1 |
| 4 | R-78818 | "E" Dough Arm | 1 |
| 5 | P-9033 | "B" Flat Beater | 1 |
| 6 | P-77764 | "D" Wire Whip | 1 |
| 7 | P-9205 | "P" Pastry Knife | 1 |