CATALOG OF REPLACEMENT PARTS



A.) N50 MIXER ML-134268, ML-134262, ML-134272, ML-134225 & ML-033777

(INCLUDES MOTOR PARTS)

ML-134268
ML-134262
ML-134272

PRIOR MLS COVERED IN THIS CATALOG

ML-134225
ML-033777

A product of HOBART 701 S. RIDGE AVENUE TROY, OHIO 45374-0001

FORM 43056 Rev. C (June 2021)

 © HOBART 2021

Table of Contents

5 SWITCH UNIT
7 VARIOUS PAINTED PARTS
9 COLUMN AND BASE UNIT
11 PLANETARY
13 TRANSMISSION
15 MOTOR PARTS
17 BOWL AND AGITATOR UNIT

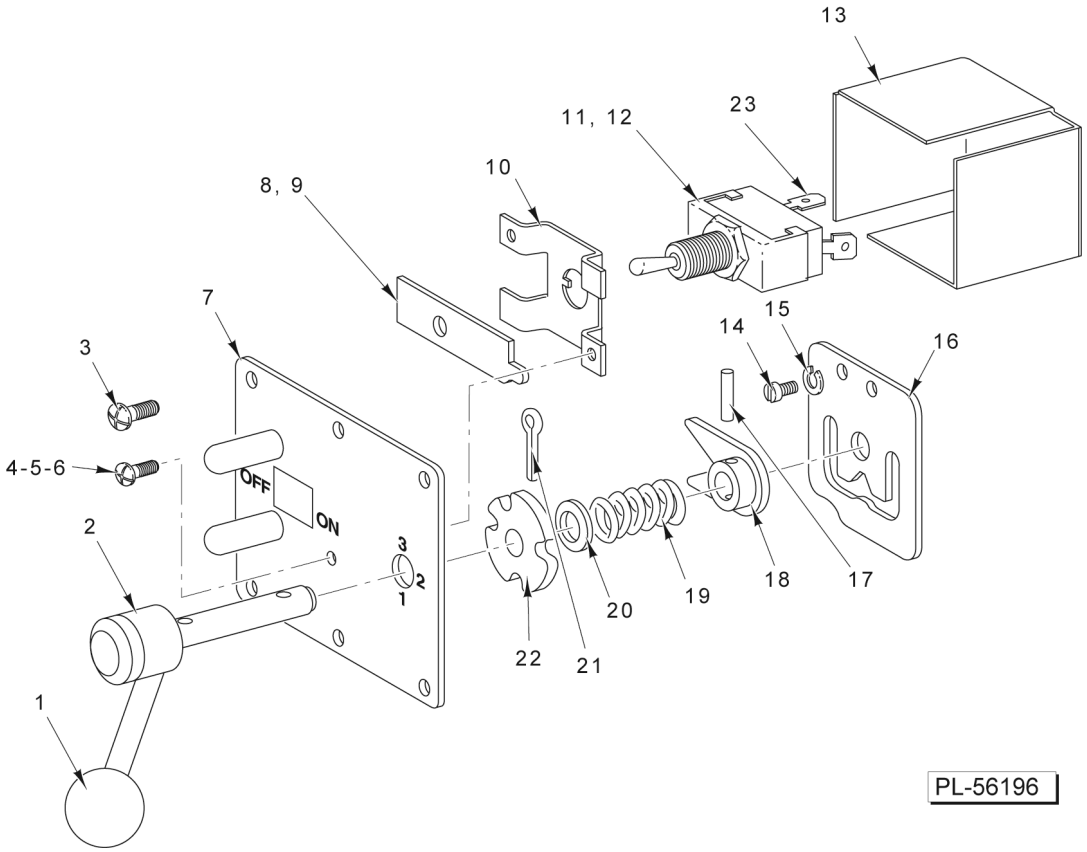
13
23
11, 12
10
8, 9
7
15
14
16
3
4-5-6
OFF
ON
3
2
1
2
1
18
17
20
19
22
21
PL-56196

SWITCH UNIT

SWITCH UNIT

ILLUS. PL-56196	PART NO.	NAME OF PART	AMT.
1	00-077401	Knob	1
2	00-290196-00003	Shift Handle Assy. (Incls. Item 1)	1
3	00-123109	Screw 6-32 x 3/8 Serrated Hd	6
4	SC-111-76	Mach. Screw 4-40 x 5/16 Phil. Pan Hd	2
5	WL-003-03	Lockwasher #4 Helical	2
6	NS-009-02	Nut 4-40 Hex	2
7	00-291980-00001	Control Box Plate Assy	1
8	00-291982	Plunger - Interlock (For Use W/Units SN 311450652 & Above)	1
9	00-937458	Plunger - Interlock (For Use W/Units Below SN 311450652)	1
10	00-291981	Bracket - Switch	1
11	00-087711-184-1	Switch (Incls. Nut & Washer) (NLA - Obsolete) Use Item 12	1
12	00-916902-00009	Switch - Toggle (Units Under SN 31140652 Must Also Order Item 8)	1
13	00-291985	Insulator - Switch	1
14	00-009091	Screw - Cam Plate Retaining	2
15	WL-019-79	Lockwasher #12 Light	2
16	00-009062	Plate - Cam	1
17	RP-005-03	Rollpin 1/8 Dia. x 5/8 Lg	1
18	00-479548	Fork - Shifter	1
19	00-007433-00001	Spring	1
20	WS-004-47	Washer	1
21	PC-006-34	Cotter Pin 7/64 x 1	1
22	00-009059	Disc - Interlock	1
23	WL-011-20	Lockwasher #6 Internal Shakeproof (Used to Attach Leads to Switch)	2

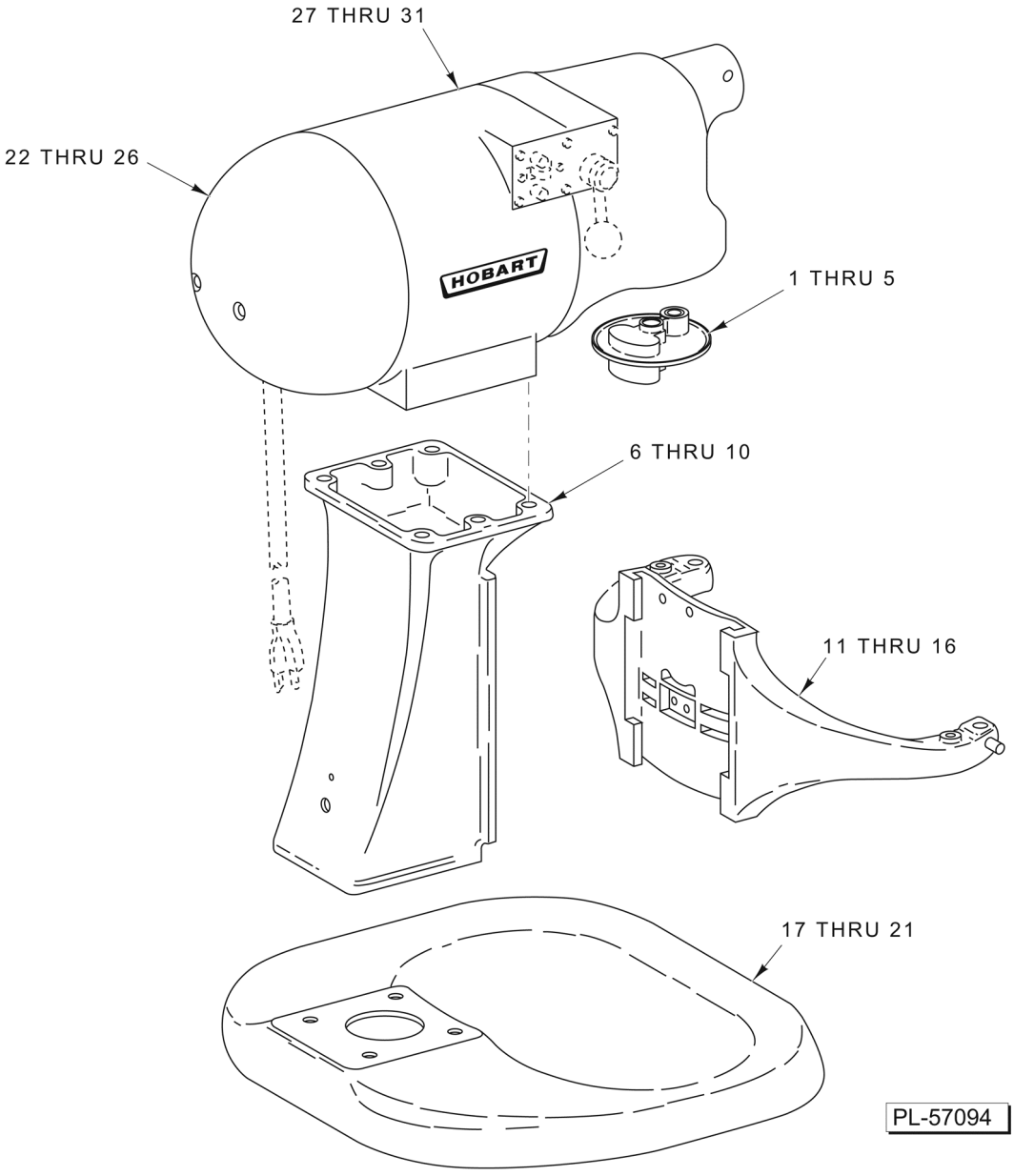

VARIOUS PAINTED PARTS

VARIOUS PAINTED PARTS

ILLUS. PL-57094	PART NO.	NAME OF PART	AMT.
1	00-477123-00002	Planetary Subassy. (Hobart Gray) (Commercial, Residential, & ASTM) (ML-33777, ML-134225, ML-134262, ML-134268, & ML-134272)	1
2	00-477123-00003	Planetary Subassy. (Cherry Red) (Commercial & Residential)	1
3	00-477123-00004	Planetary Subassy. (Berry Blue) (Commercial & Residential)	1
4	00-477123-00005	Planetary Subassy. (Plum Black) (Commercial & Residential)	1
5	00-477123-00006	Planetary Subassy. (Creamy White) (Commercial & Residential)	1
*6	00-290357	Column (Hobart Gray) (Commercial, Residential, & ASTM) (ML-33777, ML-134225, ML-134262, ML-134268, & ML-134272)	1
7	00-290357-00002	Column (Cherry Red) (Commercial & Residential)	1
8	00-290357-00003	Column (Berry Blue) (Commercial & Residential)	1
9	00-290357-00004	Column (Plum Black) (Commercial & Residential)	1
10	00-290357-00005	Column (Creamy White) (Commercial & Residential)	1
11	00-271551	Bowl Support (Hobart Gray) (Commercial & Residential) (ML-33777, ML-134225, ML-134262, & ML-134268)	1
12	00-435299	Bowl Support (Hobart Gray) (ASTM) (ML-134272)	1
13	00-271551-00002	Bowl Support (Cherry Red) (Commercial & Residential)	1
14	00-271551-00003	Bowl Support (Berry Blue) (Commercial & Residential)	1
15	00-271551-00004	Bowl Support (Plum Black) (Commercial & Residential)	1
16	00-271551-00005	Bowl Support (Creamy White) (Commercial & Residential)	1
17	00-477061	Base & Foot Support Assy. (Hobart Gray) (Commercial, Residential, & ASTM) (ML-33777, ML-134225, ML-134262, ML-134268, & ML-134272)	1
18	00-477061-00002	Base & Foot Support Assy. (Cherry Red) (Commercial & Residential)	1
19	00-477061-00003	Base & Foot Support Assy. (Berry Blue) (Commercial & Residential)	1
20	00-477061-00004	Base & Foot Support Assy. (Plum Black) (Commercial & Residential)	1
21	00-477061-00005	Base & Foot Support Assy. (Creamy White) (Commercial & Residential)	1
22	00-120433-00001	End Cover (Hobart Gray) (Commercial, Residential, & ASTM) (ML-33777, ML-134225, ML-134262, ML-134268, & ML-134272)	1
23	00-120433-00006	End Cover (Cherry Red) (Commercial & Residential)	1
24	00-120433-00007	End Cover (Berry Blue) (Commercial & Residential)	1
25	00-120433-00008	End Cover (Plum Black) (Commercial & Residential)	1
26	00-120433-00009	End Cover (Creamy White) (Commercial & Residential)	1
27	00-439956-00002	Housing Assy. (Hobart Gray) (Commercial, Residential, & ASTM) (ML-33777, ML-134225, ML-134262, ML-134268, & ML-134272)	1
28	00-439956-00004	Housing Assy. (Cherry Red) (Commercial & Residential)	1
29	00-439956-00005	Housing Assy. (Berry Blue) (Commercial & Residential)	1
30	00-439956-00006	Housing Assy. (Plum Black) (Commercial & Residential)	1
31	00-439956-00007	Housing Assy. (Creamy White) (Commercial & Residential)	1
	SC-128-96	Mach. Screw 8-32 x 3/8 Phil. Truss Hd. (SST)	1
	WL-003-12	Lockwasher #8 Helical	1
	NS-009-12	Nut 8-32 Hex	1
	PB-005-21	Plug - Button	1

* For units without reset switch, use SC-128-96, WL-003-12, NS-009-12, & PB-005-21 to cover the holes.

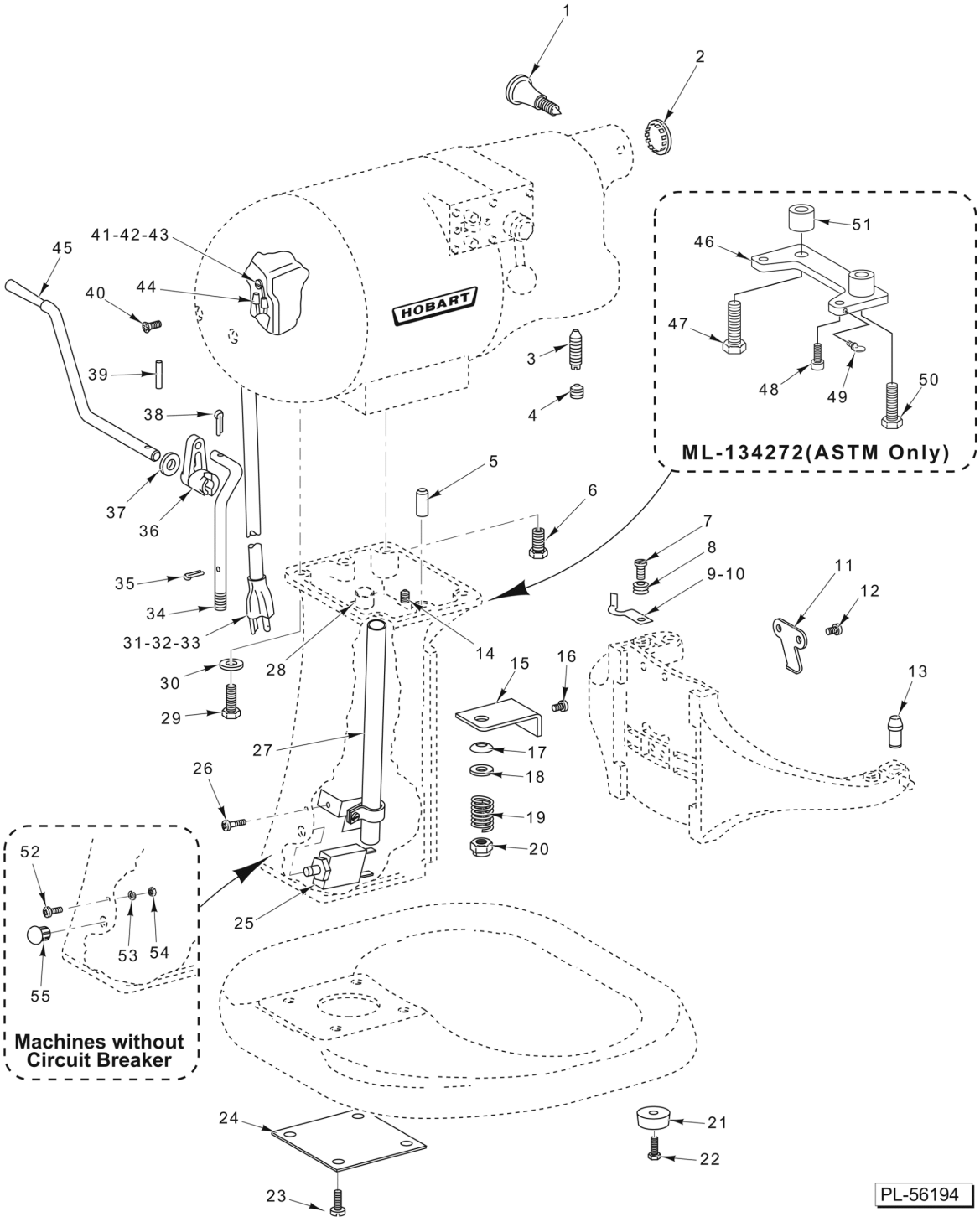

COLUMN AND BASE UNIT

COLUMN AND BASE UNIT

ILLUS. PL-56194	PART NO.	NAME OF PART	AMT.
1	00-016951-00004	Thumb Screw Assy.	1
2	PB-004-02	Plug Button (15/16).	1
3	00-009094	Screw - Adjusting.	1
4	SC-046-59	Set Screw 5/16-18 x 1/2 Slotted Hdls., Cup Pt.	1
5	00-011800-00215	Dowel.	2
6	00-477880-00002	Bolt - Special.	1
7	00-274614	Screw - Pivot.	2
8	00-291263	Washer - Belleville.	6
9	00-291444-00002	Clamp - Bowl (RH, Shown).	1
10	00-291444-00001	Clamp - Bowl (LH).	1
11	00-437161	Latch - Bowl Spring.	1
12	SC-128-95	Mach. Screw 10-24 x 1/4 Phil. Rd. Hd.	2
13	00-271552	Pin - Bowl Retaining.	2
14	SC-123-22	Screw - Set 1/4-28 x 1/2.	1
15	00-271663	Bracket - Bowl Lift.	1
16	SC-128-97	Mach. Screw 10-24 x 1/2 Phil. Flat Hd.	2
17	00-271662	V-Washer.	1
18	WS-003-23	Washer.	1
19	00-271667	Spring.	1
20	NS-048-25	Stop Nut 1/4-28 Elastic.	1
21	00-271650	Foot - Rubber.	4
22	SD-008-43	Self-Tapping Screw 8-18 x 3/8 Phil. Rd. Hd., Type B.	4
23	SC-100-12	Mach. Screw 5/16-18 x 3/4 Hex Washer Hd.	4
24	00-078815	Screen - Air.	1
25	00-101491-29-01	Circuit Breaker (ML-134225 & ML-134262).	1
	00-937596-00006	Breaker, Circuit 1.5A (ML-134268 230/60/1).	1
26	SD-012-20	Self-Tapping Screw 8-32 x 1/2 Phil. Truss Hd., Type T (ML-134225 & ML-134262)	1
27	00-124936	Bracket & Insulator Assy (ML-134225 & ML-134262).	1
28	00-024670	Insulator - Fiber (ML-134225 & ML-134262).	1
29	SC-037-75	Cap Screw 5/16-18 x 3/4 Hex Hd.	3
30	WS-017-09	Washer (SST).	3
31	00-117542-00026	Cord & Plug Assy. (3 Cond., 115 V.).	1
32	00-117542-00027	Cord & Plug Assy. (3 Cond., 220/230 V.).	1
33	FE-017-41	Relief - Strain (Electrical) (Use with 31 & 32).	1
34	00-271665	Rod - Bowl Lift.	1
35	PC-006-33	Cotter Pin 3/32 x 1/2.	1
36	00-937432	Arm - Bowl Lift.	1
37	00-875825	Spacer.	1
38	PC-006-33	Cotter Pin 3/32 x 1/2.	1
39	RP-002-10	Roll Pin 3/16 Dia. x 1 Lg.	1
40	SC-128-93	Mach. Screw 8-32 x 1/2 Phil. Oval Hd.	2
41	SC-018-50	Mach. Screw 6-32 x 1/4 Slotted Pan Hd.	1
42	WL-011-20	Lockwasher #6 Internal Shakeproof.	1
43	00-278367-00002	Motor Housing Assy. (ML-33777).	1
44	FE-006-17	Wire Nut (16-22 Ga.).	2
45	00-437310	Handle - Bowl Lift.	1
46	00-479505	Bracket - Adjustment (ML-134272).	1
47	SC-036-84	Cap Screw 7/16-14 x 1-1/4 Hex Hd. (ML-134272).	1
48	00-875151	Screw - Adjusting (ML-134272).	2
49	00-070641-00012	Thumb Screw 6-32 (ML-134272).	2
50	SC-062-21	Cap Screw 5/16-18 x 1 1/4 Hex Hd. (ML-134272).	1
51	00-479506	Spacer.	1
52	SC-128-96	Mach. Screw 8-32 x 3/8 Phil. Truss Hd. (SST).	1
53	WL-003-12	Lockwasher #8 Helical.	1
54	NS-009-12	Nut 8-32 Hex.	1
55	PB-005-21	Plug - Button.	1

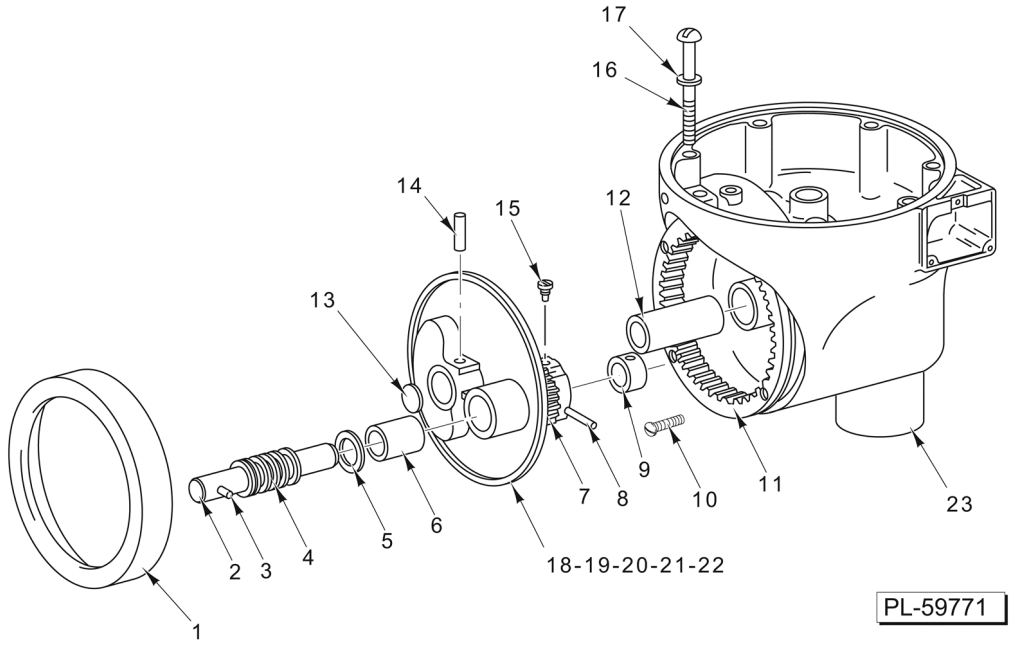

PLANETARY

PLANETARY

ILLUS. PL-59771	PART NO.	NAME OF PART	AMT.
1	00-021625-00003	Cup - Drip	1
2	00-061473	Agitator Shaft Assy. (Incls. Item 3)	1
3	PG-006-11	Pin - Groove 1/4 x 5/8, Type D	1
4	00-270718	Spring - Agitator Shaft	1
5	WS-008-02	Washer	1
6	00-009038	Bearing - Planetary (Lower)	1
7	00-274427	Pinion - Agitator Shaft (18T)	1
8	00-274444-00001	Pin - Agitator Shaft	1
9	00-007595	Bearing - Planetary (Upper)	1
10	SC-129-20	Mach. Screw 10-24 x 5/8 Hex Button Hd	4
11	00-005428	Gear - Internal (59T)	1
12	00-009039	Bearing - Planetary Shaft	1
13	00-004378	Washer - Cupped	1
14	PT-003-29	Taper Pin - #1 x 1 In. Lg	1
15	00-007602	Screw - Bearing Retaining	1
16	SC-008-58	Mach. Screw 12-24 x 2-3/4 Slotted Rd. Hd	7
17	WS-002-30	Washer, Fiber	7
18	00-274602	Planetary Assy. (Hobart Gray) (Incls. Items 2 thru 9, 13, & 15)	1
19	00-274602-00002	Planetary Assy. (Cherry Red) (Incls. Items 2 thru 9, 13, & 15)	1
20	00-274602-00003	Planetary Assy. (Berry Blue) (Incls. Items 2 thru 9, 13, & 15)	1
21	00-274602-00004	Planetary Assy. (Plum Black) (Incls. Items 2 thru 9, 13, & 15)	1
22	00-274602-00005	Planetary Assy. (Creamy White) (Incls. Items 2 thru 9, 13, & 15)	1
23	00-290257	Trans. Case & Brg. Assy. (Incls. Items 10, 11, & 12) (ML-33777 & ML-134225)	1

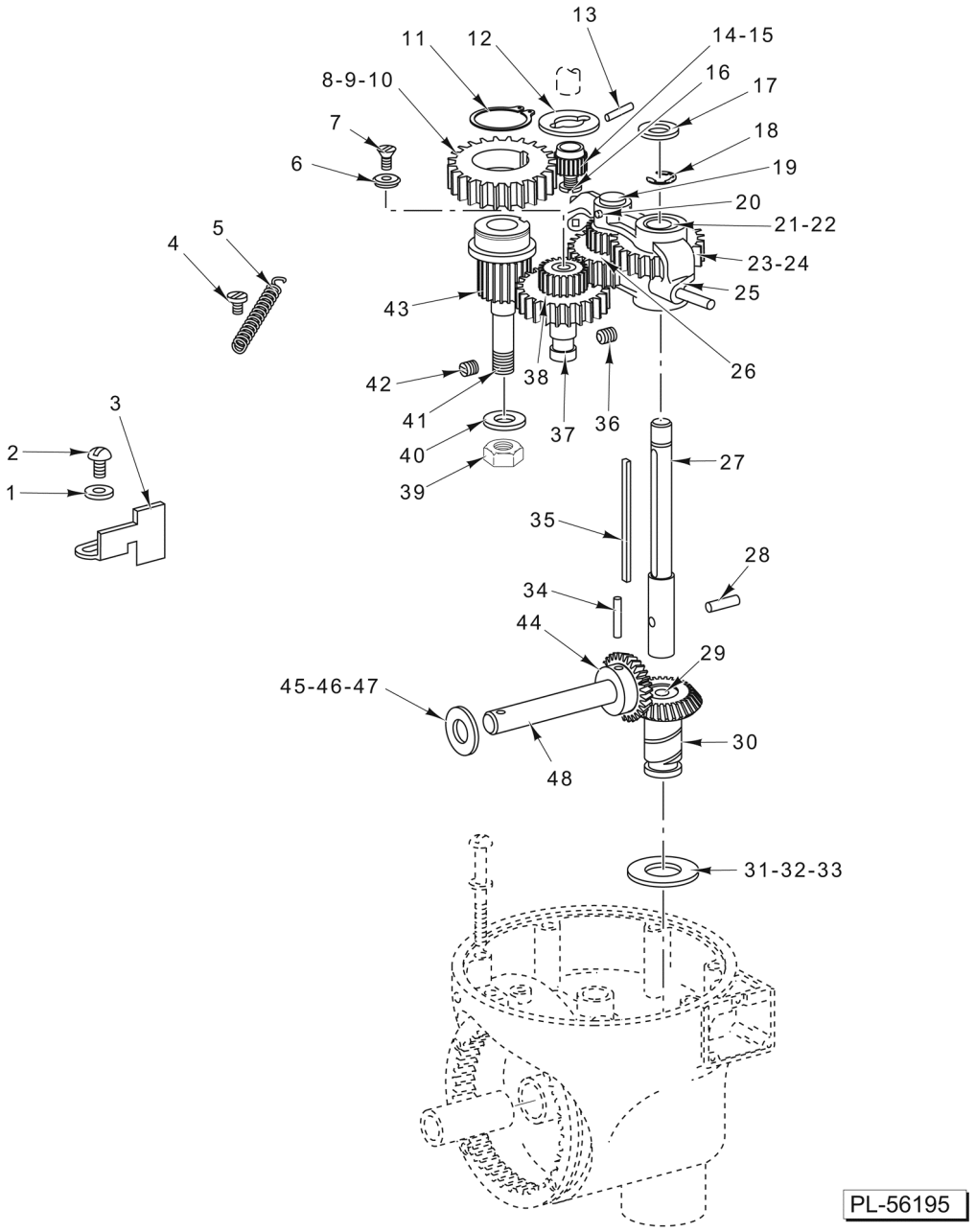

TRANSMISSION

TRANSMISSION

ILLUS. PL-56195	PART NO.	NAME OF PART	AMT.
1	WS-003-07	Washer	1
2	SC-060-07	Mach. Screw 12-24 x 3/4 Rd. Hd	1
3	00-009090	Stop - Tumbler Yoke	1
4	SC-013-26	Mach. Screw 8-32 x 3/8 Slotted Flat Hd	1
5	00-010973	Spring - Tumbler Yoke	1
6	00-009042	Washer - Retaining	1
7	SC-128-97	Mach. Screw 10-24 x 1/2 Phil. Flat Hd	1
8	00-875769	Gear - Main Drive (49T) (60 Hz.)	1
9	00-875794	Gear - Main Drive (47T) (50 Hz.)	1
10	00-012430-00083	Key	1
11	RR-007-02	Retaining Ring	1
12	00-016747	Washer - Motor Pinion	1
13	00-016777	Pin	1
14	00-016759	Pinion - Motor (17T) (50 Hz.)	1
15	00-009421	Pinion - Motor (15T) (60 Hz.)	1
16	00-005247-00002	Screw - Pinion Retaining	1
17	WS-008-04	Washer	1
18	RR-004-25	Retaining Ring	1
19	00-009052	Shaft - Tumbler	1
20	PC-003-36	Cotter Pin 3/32 x 1 Lg	1
21	00-009050	Sleeve - Shifter	1
22	00-009051	Retainer - Shifter Sleeve	1
23	00-009048	Gear - Transmission (31T)	1
24	00-012430-00022	Key	1
25	00-107342	Tumbler Yoke & Shifter Pin Assy	1
26	00-009047	Transmission Gear Assy. (15T & 31T)	1
27	00-115148	Shaft - Transmission (Upper)	1
28	00-011800-00187	Dowel	1
29	00-005465	Washer, Plug	1
30	00-104040-00002	Zerol Bevel Gear Assy. (23T) (Incls. Item 29)	1
31	WS-012-12	Washer (0.008 Thk.)	AR
32	WS-012-13	Washer (1/64 Thk.)	AR
33	WS-012-14	Washer (1/32 Thk.)	AR
34	PT-003-40	Taper Pin - #2 x 1 In. Lg	1
35	00-012430-00023	Key - Transmission Shaft (Upper)	1
36	SC-046-27	Set Screw 1/4-20 x 1/4 Slotted Hdls., Cup Pt	1
37	00-009043	Shaft - Transmission (Lower)	1
38	00-009047	Transmission Gear Assy. (15T & 31T)	1
39	NS-013-22	Nut 3/8-16 Hex	1
40	00-006021	Washer (Copper)	1
41	00-009088	Shaft - Eccentric	1
42	SC-046-27	Set Screw 1/4-20 x 1/4 Slotted Hdls., Cup Pt	1
43	00-017864	Flange Ring & Hub Assy	1
44	00-020661-00002	Gear - Zerol Bevel (23T)	1
45	00-124945	Washer (0.010 Thk.)	AR
46	00-124946	Washer (1/32 Thk.)	AR
47	00-124947	Washer (1/16 Thk.)	AR
48	00-009040	Shaft - Planetary	1
	00-074676	Tumbler Yoke & Gear Assy. (Incls. Items 19 thru 26)	1

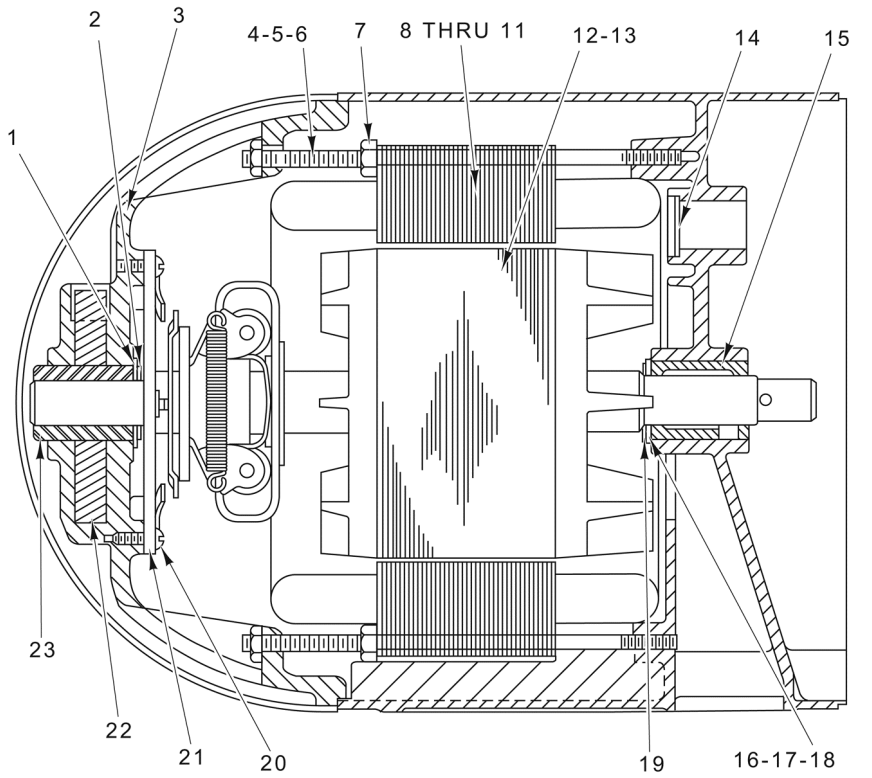

PL-56193

MOTOR PARTS

MOTOR PARTS

ILLUS. PL-56193	PART NO.	NAME OF PART	AMT.
1	WS-007-21	Washer (0.031 Thk.)	AR
2	WS-007-19	Washer (Fiber)	AR
3	00-812450	Bracket - Motor Bearing	1
4	00-022216-00002	Stud	4
5	00-023383-00014	Sleeve (Elec. Leads Protection) (60 Hz.)	4
6	00-023383-00018	Sleeve (Elec. Leads Protection) (50 Hz.)	4
7	NS-009-12	Nut 8-32 Hex	8
8	00-065477-008-1	Stator Assy. (115 V., 60 Hz., 1 Ph.)	1
9	00-065477-008-2	Stator Assy. (230 V., 60 Hz., 1 Ph.)	1
10	00-065477-028-1	Stator Assy. (115 V., 50 Hz., 1 Ph.)	1
11	00-065477-028-4	Stator Assy. (230 V., 50 Hz., 1 Ph.)	1
12	00-022275-00149	Rotor Assy. (60 Hz.)	1
13	00-022275-00148	Rotor Assy. (50 Hz.)	1
14	00-004378	Washer - Cupped	1
15	00-290659	Bearing - Sleeve (Pulley End)	1
16	WS-007-21	Washer (0.031 Thk.)	AR
17	WS-031-50	Washer (0.015 Thk.)	AR
18	SL-005-10	Spring - Loading	1
19	WS-007-19	Washer (Fiber)	AR
20	SC-018-28	Mach. Screw 6-32 x 1/4 Phil. Pan Hd	2
21	00-066085	Switch - Starting (Stationary Part)	1
22	00-511813	Wicking 5/16 Dia. x 1/2 In. Lg	AR
23	00-290659	Bearing - Sleeve	1

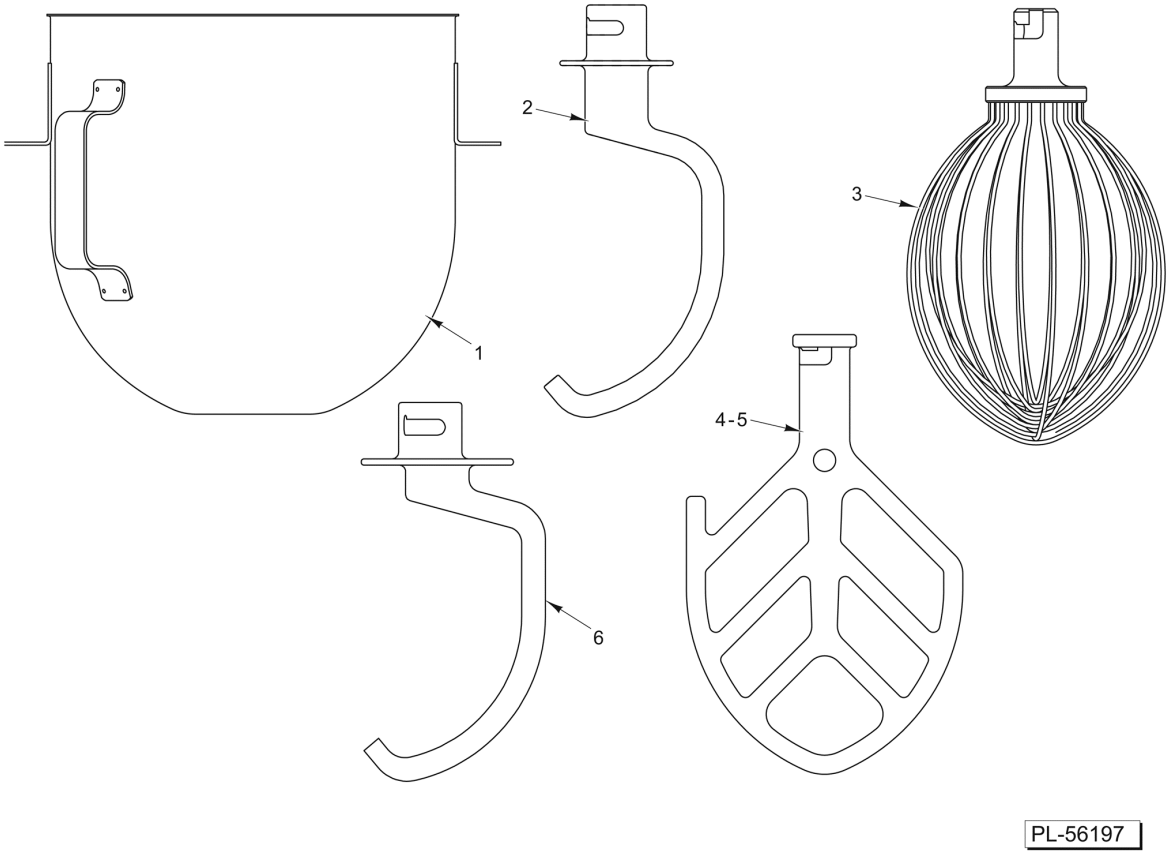

BOWL AND AGITATOR UNIT

BOWL AND AGITATOR UNIT

ILLUS. PL-56197	PART NO.	NAME OF PART	AMT.
1	00-295576	Bowl - 5 Qt. (SST)	1
2	00-315966	"E" Dough Arm	1
3	00-295580	"D" Wire Whip	1
4	00-295578	"B" Flat Beater (Aluminum)	1
5	00-295579	"B" Flat Beater (SST)	1
6	00-875822	"ED" Dough Arm	1