N50 MIXER

INSTRUCTIONAL MANUAL



Model N50





ML-134262
ML-134268

HOBART

701 S. RIDGE AVENUE • TROY, OHIO 45374-0001 • 937-332-3000 • WWW.HOBARTCORP.COM

IMPORTANT SAFEGUARDS

When using electrical appliances, basic safety precautions should always be followed, including the following:

1. Read all instructions.
2. To protect against the risk of electrical shock, do not put mixer in water or other liquid.
3. Close supervision is necessary when this or any appliance is used by or near children.
4. Unplug mixer from outlet when not in use, before putting on or taking off agitator and before cleaning.
5. Avoid contact with moving parts. Keep hands, hair and clothing, as well as spatulas and other utensils away from the agitator during operation to reduce the risk of injury to persons and/or damage to the mixer.
6. Do not operate the mixer with a damaged cord or plug, after the mixer malfunctions, or is dropped or damaged in any manner. Return appliance to the nearest authorized service center for examination, repair, electrical or mechanical adjustment.
7. Hobart does not recommend the use of hub attachments with this machine.
8. Do not use the mixer outdoors.
9. Do not let the cord hang over edge of table or counter.
10. Remove agitator (flat beater, wire whip or dough hook) from the mixer before washing.

SAVE THESE INSTRUCTIONS

FOR SERVICE AND PARTS, CALL 1-888-4HOBART

INSTALLATION, OPERATION AND CARE OF N50 MIXER

{ SAVE THESE INSTRUCTIONS }

GENERAL

The model N50 mixer is a 5-quart countertop mixer equipped with a 1/6 H.P. motor, cord and plug as standard equipment.

INSTALLATION

UNPACKING

Immediately after unpacking the mixer, check for possible shipping damage. If this machine is found to be damaged after unpacking, save the packaging material and contact the carrier within 15 days of delivery.

LOCATION

Before installation, test the electrical service to make sure that it agrees with the specifications on the machine data plate. Place the mixer on a suitable sturdy level surface. There should be adequate space around the mixer for the user to operate the controls and install and remove bowls.

ELECTRICAL CONNECTIONS

WARNING: THE ELECTRICAL CORD ON THIS MACHINE IS EQUIPPED WITH A THREE-PRONGED GROUNDING PLUG WHICH MUST BE CONNECTED TO A PROPERLY GROUNDED RECEPTACLE. IF THE RECEPTACLE IS NOT THE PROPER GROUNDING TYPE, CONTACT AN ELECTRICIAN. DO NOT REMOVE THE GROUNDING PRONG FROM THE PLUG.

OPERATION

WARNING: MOVING AGITATOR IN BOWL, KEEP HANDS, CLOTHING AND UTENSILS OUT WHILE IN OPERATION.

Fig.1

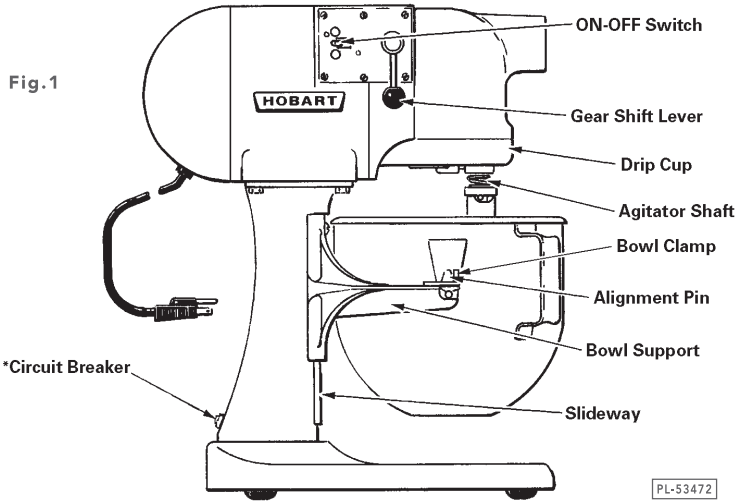

CONTROLS

The ON-OFF switch (Fig. 1) is used to start and stop the mixer. The gear shift lever (Fig. 1) is used to change speeds. Always stop the mixer before changing speeds.

To change speeds, turn the switch OFF, move the gear shift lever to the desired speed and turn the switch back ON.

NOTE: There is a mechanism which prevents the gear shift lever from being moved with the switch in the ON position and also prevents the switch from being turned ON if the gear shift lever is between gears.

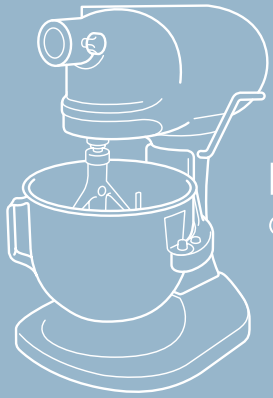

N50 MIXER

OPERATION CONTINUED

SPEED 1 (Low) — This speed is for heavy mixtures such as bread dough, heavy batters and potatoes.

Speed 2 (Medium) — This speed is for light dough which must rise quickly, cake batters and some whipping operations.

SPEED 3 (High) — This is a fast speed for light work such as whipping cream, beating eggs and mixing thin batters.

The bowl lift handle is used to raise and lower the bowl. To raise the bowl, rotate the handle upward; rotating the handle downward lowers the bowl.

*Circuit breaker provided only on 115/60/1 units. (Not provided on ASTM units)

BOWL

New mixer bowls and agitators (beaters, whips and dough hooks) should be thoroughly washed with hot water and a mild soap solution, rinsed with either a mild soda or vinegar solution and thoroughly rinsed with clear water BEFORE being put into service. This cleaning procedure should also be followed for bowls and agitators before whipping egg whites or whole eggs. The bowl must be installed before the agitator. To install the bowl, fully lower the bowl support (Fig. 1). Position the bowl so the alignment bracket on the back of the bowl is in the bowl retainer and the alignment pins (Fig. 1) on the front of the bowl support fit in the holes on the sides of the bowl. Lock the bowl in place by rotating the bowl clamps (Fig. 1) over the ears of the bowl.

AGITATOR

To install an agitator, the bowl must be installed and fully lowered. Place the agitator in the bowl, push it up on the agitator shaft (Fig. 1) and turn it clockwise to seat the shaft pin in the slot of the agitator shank.

MIXING

This section explains operation of the mixer. A Compact Disk with the (Use and Applications Handbook) is provided with the mixer which contains information on mixing procedures and outlines specific uses for agitators.

CIRCUIT BREAKER

The 115/60/1 units are equipped with a circuit breaker to prevent overloading the mixer. The circuit breaker will trip if mixer is overloaded. Ensure mixer is shut-off and unplug unit prior to removing the overloading condition and resetting the circuit breaker. Follow Troubleshooting guide if unit will not start.

CLEANING

WARNING: UNPLUG MACHINE POWER CORD BEFORE BEGINNING ANY CLEANING PROCEDURE.

DAILY

Bowls and agitators should be removed from the mixer and cleaned in a sink. DO NOT use a hose to clean the mixer — it should be wiped with a clean damp cloth.

Remove the agitator spring for cleaning.

1. Slip the lower end of the spring underneath the agitator pin and screw in a counterclockwise motion until the spring comes off (Fig. 2).
2. After cleaning, reinstall the agitator spring by reversing this procedure.

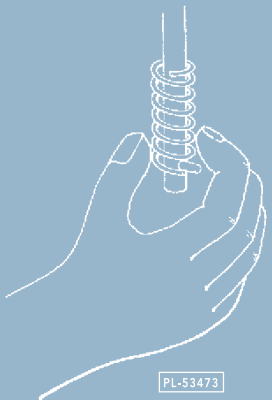

Fig.2

NOTE: All coils of the spring should be above the agitator pin.

CAUTION: Do not operate agitators without the agitator spring in place. Damage to mixer will result.

PERIODIC: The drip cup (Fig. 1) should be removed and wiped clean.

MAINTENANCE

WARNING: UNPLUG MACHINE POWER CORD BEFORE BEGINNING ANY MAINTENANCE PROCEDURE.

BOWL LIFT SLIDEWAYS

The slideways (Fig. 1) should be lubricated twice a year. Apply a light coat of Lubriplate 630AA to all three surfaces of both slideways.

SERVICE

If service is required on this equipment, return it to your local Hobart Service Center. For an authorized Hobart Service Center, call 1-888-4HOBART.

TROUBLESHOOTING

PROBLEM	POSSIBLE CAUSE
Mixer will not start.	1. Check incoming power source and make sure unit is plugged in.
	2. Check circuit breaker on mixer. Verify that circuit breaker is reset by pressing in on the black button (Fig.1).
	3. Take mixer to your local Hobart Service Center.