HOBART

INSTRUCTION MANUAL

... with Replacement Parts



MODEL N-50 MIXER

ML-16472

A product of HOBART CORPORATION TROY, OHIO 45374

FORM 6820E (Rev. 8-73) (Supsds. F. 6820D, 3-73)

- THIS PAGE INTENTIONALLY LEFT BLANK -

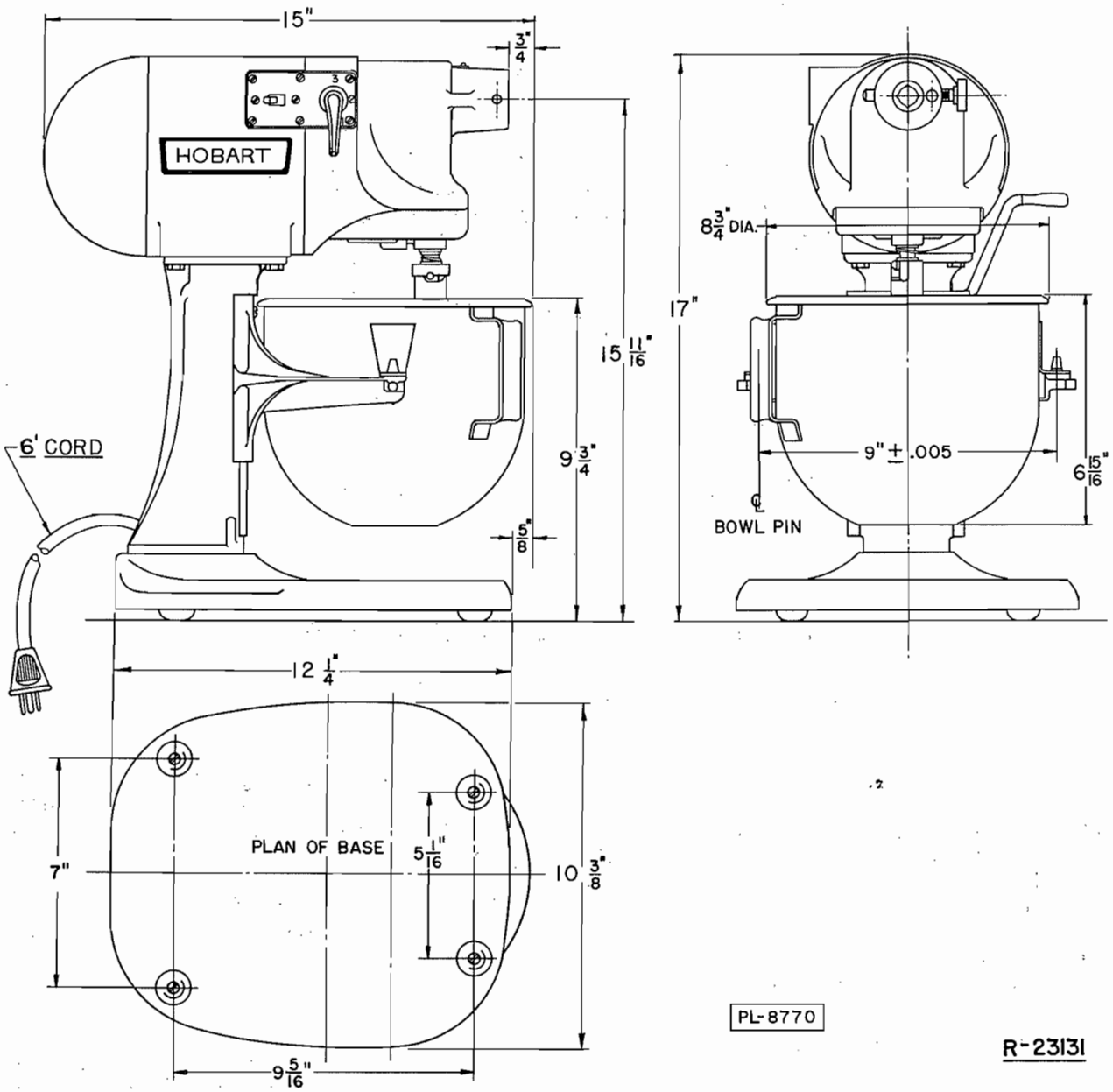

INSTALLATION DIAGRAM

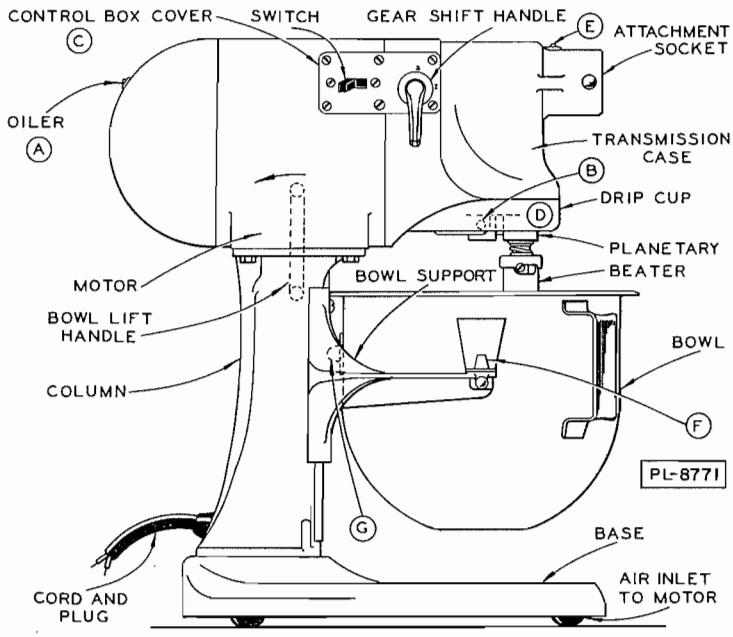

Fig. 1

Instructions For Model N-50
HOBART LABORATORY MIXER

CONNECTIONS:

Before plugging into a socket the first time, make sure that the electrical specifications of the line are the same as called for on the data plate attached to column (Fig. 1).

If cord and plug is not used with this machine, electrical connections should be made by qualified workmen who will observe all applicable Safety Codes and the National Electrical Code.

LUBRICATION:

Very little lubrication is required. Once a month put three drops of oil in the oiler (A, Fig. 1) at the back of the motor, and a like amount in oiler (E, Fig. 1) on the attachment hub.

The transmission gearing is lubricated by a special grease that will last for several years of normal use. Consult a Hobart service technician before adding grease.

After using the machine for a year or two, have the service technician lower the planetary and grease the teeth of the internal gear. The planetary is held to its shaft by a taper pin (B, Fig. 1).

SPEED CHANGING:

There are three speeds. To change from one speed to another, switch off the motor and move the gear shift handle to the required number. As shown in Fig. 1, the handle is set for No. 1 or slow speed. The gear shift handle is interlocked with the switch so that it can be moved only when the switch handle is at "OFF".

BOWL:

To put on the bowl, first locate the back bowl pin (G, Fig. 1) in its proper place, then snap down the bowl locating lugs over the bowl retaining pins (F, Fig. 1).

AGITATORS:

Agitators are available in various designs to suit the class of work to be performed. See Fig. 2.

FLAT BEATER - B–

For mixing batters, mashing potatoes, and general purpose creaming.

WIRE LOOP WHIP - D–

For beating eggs, whipping cream, and all light, fast work.

DOUGH HOOK - E–

For kneading coffee cake, roll dough, and the heavier yeast raised work. Use on No. 1 speed.

PASTRY KNIFE - PK–

For biscuits, pie crust, short cake, and pastry with shortening content.

BOWL LIFT:

Move the bowl-lift handle back as shown by the arrow in Fig. 1 to lower the bowl for changing agitators. Lowering also makes the bowl more accessible for filling.

To mash potatoes, or cream butter, start with the bowl down and raise it slowly into working position as the materials break up.

ATTACHMENTS:

Among the attachments available for this machine are:

Meat Chopper
Vegetable Slicer
Shredder
Ice Chipper
Splash Cover
Salad Oil Dropper
Colander Outfit
Pouring Chute
Ice Jacket

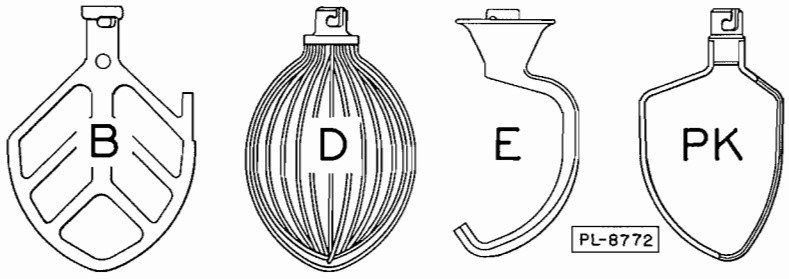

Fig. 2

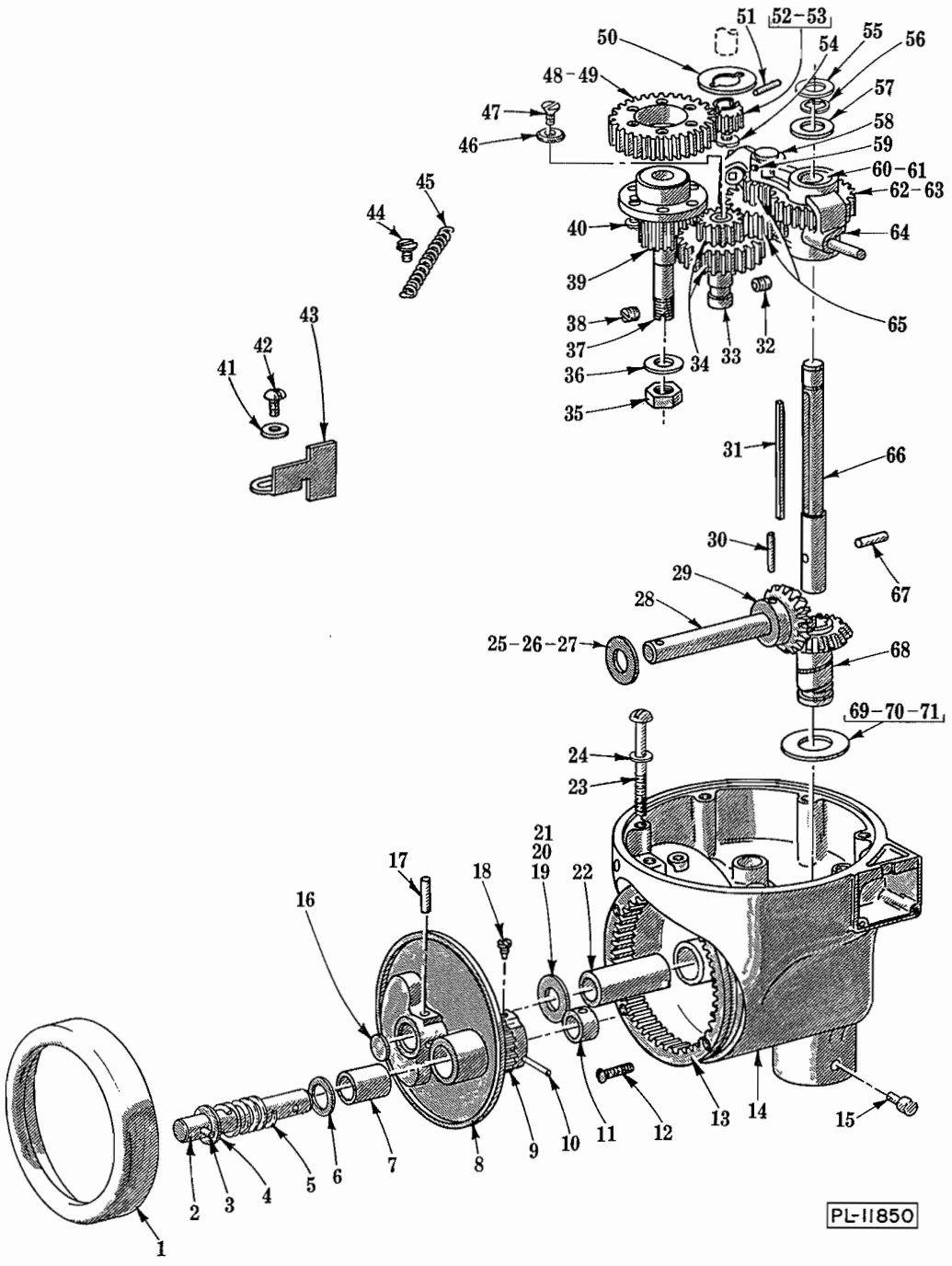

PLANETARY, TUMBLER AND AGITATOR SHAFT UNIT

ILLUS. PL-11850	PART NO.	NAME OF PART	AMT.
1	P-21625-3	Cup - Drip	1
2	M-61473	Agitator Shaft Sub-Assy. (Incls. item #3)	1
3	PG-6-11	Groove-Pin - Type #4, 1/4" x 5/8"	1
4	WS-7-21	Washer	1
5	V-111227	Spring - Agitator Shaft	1

PLANETARY, TUMBLER AND AGITATOR SHAFT UNIT (Cont.)

ILLUS. PL-11850	PART NO.	NAME OF PART	AMT.
6	WS-8-2	Washer	1
7	V-9038	Bearing - Planetary (Lower)	1
8	A-113323	Planetary & Lower Bearing Sub-Assy. (Incls. item #7)	1
9	B-5987	Pinion - Agitator Shaft (18T)	1
10	V-5988	Pin - Agitator Shaft	1
11	V-7595	Bearing - Planetary (Upper)	1
12	SC-9-25	Mach. Screw - #10-24 x 5/8" Rd. Hd.	4
13	M-5428	Gear - Internal (59T)	1
14	M-61064-1	Trans. Case & Attach. Pin Sub-Assy. Unit (Incls. items #15 & 22)	1
15	V-5479	Pin - Attachment Hub Support	1
16	V-4378	Washer - Cupped	1
17	PT-3-29	Taper Pin - #1 x 1" Lg.	1
18	V-7602	Screw - Bearing Retaining	1
19	WS-7-24	Washer - Thrust (.008" Thk.)	As Reqd.
20	WS-7-26	Washer - Thrust (1/32" Thk.)	As Reqd.
21	WS-7-28	Washer - Thrust (1/16" Thk.)	As Reqd.
22	V-9039	Bearing - Planetary Shaft	1
23	SC-8-58	Mach. Screw - #12-24 x 2-3/4" Rd. Hd.	7
24	WS-2-30	Washer	7
25	WS-7-24	Washer - Thrust (.008" Thk.)	As Reqd.
26	WS-7-26	Washer - Thrust (1/32" Thk.)	As Reqd.
27	WS-7-28	Washer - Thrust (1/16" Thk.)	As Reqd.
28	M-9040	Shaft - Planetary	1
29	M-20661	Gear - Zerol Bevel (23T)	1
30	PT-3-40	Taper Pin - #2 x 1" Lg.	1
31	R-12430-23	Key - Transmission Shaft (Upper)	1
32	SC-46-27	Set Screw - 1/4"-20 x 1/4" Hdls., Cup Pt.	1
33	V-9043	Shaft - Transmission (Lower)	1
34	M-9047	Transmission Gear Assy. (15T & 31T)	1
35	NS-13-22	Full Nut - 3/8"-16 Hex Fin.	1
36	V-6021	Washer (Copper)	1
37	M-9088	Shaft - Eccentric	1
38	SC-46-27	Set Screw - 1/4"-20 x 1/4" Hdls., Cup Pt.	1
39	M-17864	Flange Ring & Hub Assy.	1
40	SC-7-42	Mach. Screw - #8-32 x 1/2" Rd. Hd.	6
41	WS-3-7	Washer	1
42	SC-8-51	Mach. Screw - #12-24 x 3/4" Rd. Hd.	1
43	M-9090	Stop - Tumbler Yoke	1
44	SC-13-26	Mach. Screw - #8-32 x 3/8" Flat Hd.	1
45	M-10973	Spring - Tumbler Yoke	1
46	V-9042	Washer - Retaining	1
47	SC-13-48	Mach. Screw - #10-24 x 1/2" Flat Hd.	1
48	M-9392	Gear - Main Drive (49T) (60 Hz.)	1
49	M-16758	Gear - Main Drive (47T) (50 Hz.)	1
50	M-16747	Plate - Baffle	1
51	V-16777	Pin	1
52	M-9421	Pinion - Motor (15T) (60 Hz.)	1
53	M-16759	Pinion - Motor (17T) (50 Hz.)	1
54	V-5247-2	Screw - Pinion Retaining	1
55	WS-8-4	Washer	1
56	RR-4-25	Retaining Ring	1
57	WS-8-2	Washer	1
58	V-9052	Shaft - Tumbler	1
59	PC-3-36	Cotter Pin - 3/32" x 1"	1
60	M-9050	Sleeve - Shifter	1
61	V-9051	Retainer - Shifter Sleeve	1
62	M-9048	Gear - Transmission (31T)	1
63	R-12430-22	Key	1
64	A-107342	Tumbler Yoke & Shifter Pin Sub-Assy.	1
65	M-9047	Transmission Gear Assy. (15T & 31T)	1
66	M-115148	Shaft - Transmission (Upper)	1
67	P-11800-187	Dowel	1
68	A-104040	Zerol Bevel Gear Sub-Assy. (23T)	1
69	WS-12-12	Washer - Thrust (.008" Thk.)	As Reqd.
70	WS-12-13	Washer - Thrust (1/64" Thk.)	As Reqd.
71	WS-12-14	Washer - Thrust (1/32" Thk.)	As Reqd.
	M-74676	Tumbler Yoke & Gear Assy. (Incls. items #57 thru 65)	1
	M-74677	Planetary, Gear, Shaft & Bearing Sub-Assy. (Incls. items #2, 4, 5, 6, 8, 9, 10, 11, 16 & 18)	1

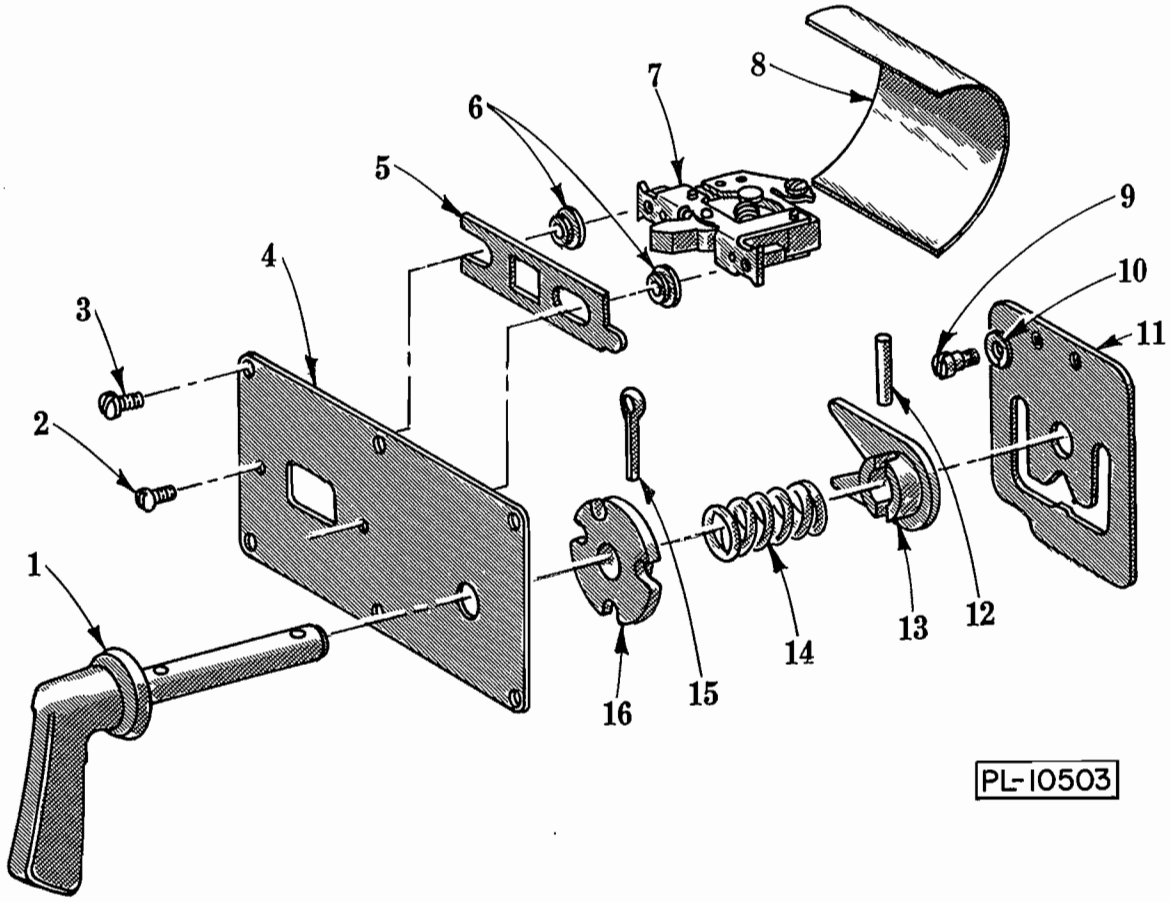

SWITCH UNIT

SWITCH UNIT

ILLUS. PL-10503	PART NO.	NAME OF PART	AMT.
1	P-10684-2	Handle - Shifter	1
2	SC-28-15	Mach. Screw - #4-36 x 3/8" Rd. Hd.	2
3	SC-18-10	Mach. Screw - #6-32 x 3/8" Pan Hd.	6
4	P-89912	Plate - Control Box Cover	1
5	V-9057	Plunger - Interlock	1
6	V-9056	Disc - Guide	2
7	P-87711-12-1	Switch (125-250 V.) (Incls. item #2)	1
8	V-11019	Strip - Insulating	1
9	V-9091	Retaining Screw - Cam Plate	2
10	WL-3-28	Lock Washer - #12 x .062" x .047"	2
11	M-9062	Plate - Cam	1
12	P-11800-19	Dowel	1
13	V-10335	Fork - Shifter	1
14	V-7433-1	Spring	1
15	PC-3-50	Cotter Pin - 7/64" x 1"	1
16	V-9059	Disc - Interlock	1
	FE-6-29	Connector - Wire (Not Shown)	2

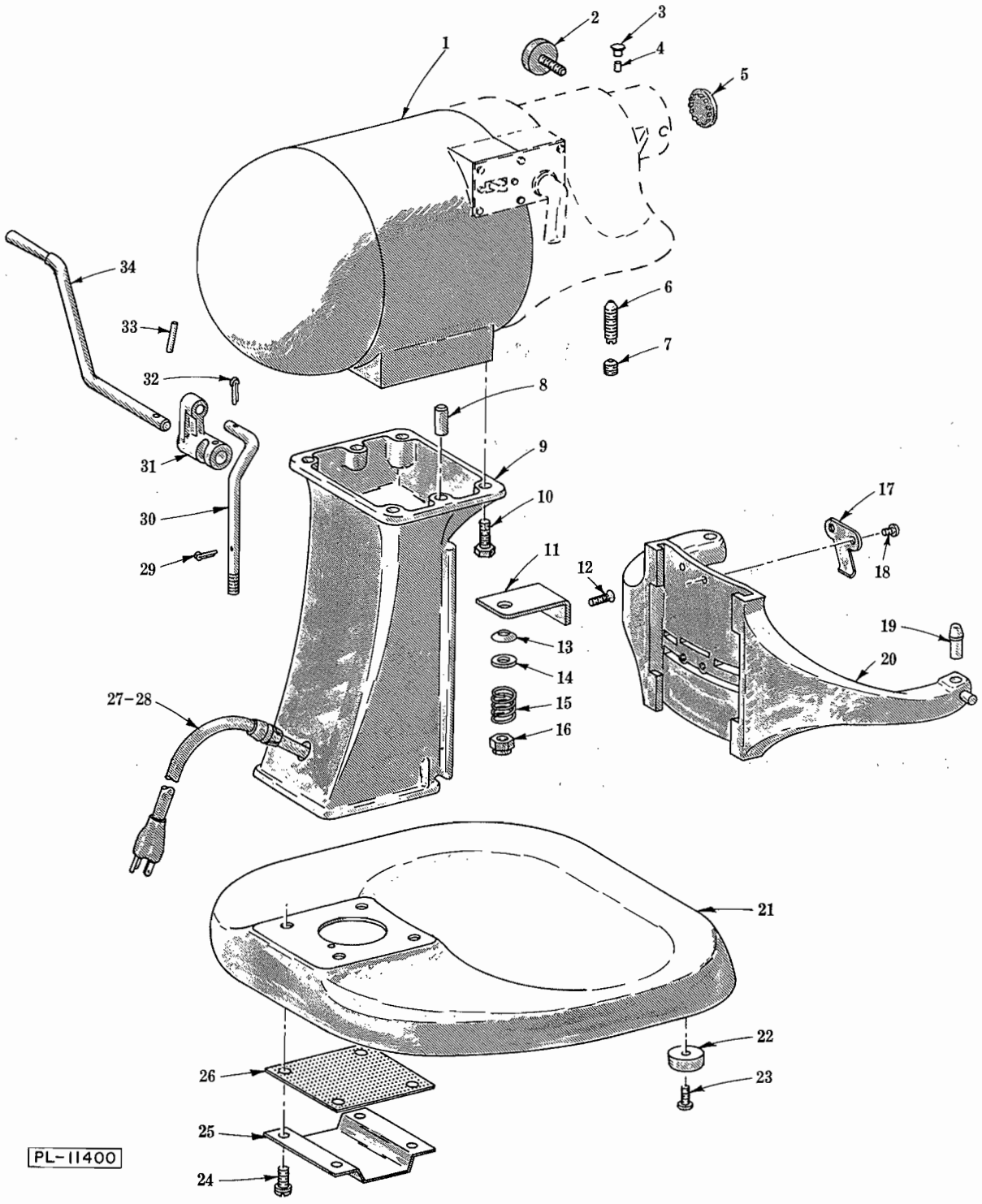

COLUMN AND BASE UNIT

COLUMN AND BASE UNIT

ILLUS. PL-11400	PART NO.	NAME OF PART	AMT.
1	---	Motor (See separate Motor Parts Sheet)	1
2	M-16740	Thumb Screw	1
3	OG-3-28	Oiler	1
4	513379	Wicking (5/32" x 1/2")	1
5	V-18819	Cap - Attachment Hub	1
6	V-9094	Screw - Adjusting	1
7	SC-46-59	Set Screw - 5/16"-18 x 1/2" Hdls., Cup Pt.	1
8	P-11800-215	Dowel	2
9	A-113394	Column & Dowel Sub-Assy. (Incls. item #8)	1
10	SC-62-63	Fin. Bolt - 5/16"-18 x 3/4" Hex Hd.	4
11	M-9080-2	Bracket - Bowl Lift	1
12	SC-13-48	Mach. Screw - #10-24 x 1/2" Flat Hd.	2
13	A-103906	"V" Washer	1
14	WS-3-23	Washer	1
15	V-9237	Spring	1
16	NS-31-23	Stop Nut - 1/4"-28 "Elastic"	1
17	A-9083	Latch - Bowl Spring	1
18	SC-7-72	Mach. Screw - #10-24 x 1/4" Rd. Hd.	2
19	V-4821	Pin - Bowl Retaining	2
20	M-24881-1	Bowl Support Sub-Assy. (Incls. item #19)	1
21	R-89835-1	Base & Foot Support Sub-Assy.	1
22	V-13983-1	Foot	4
23	SD-19-10	Self-Tapping Screw - #7 x 3/8" Phil. Rd. Hd., Type B	4
24	SA-13-6	Screw & L.W. Assy. - 5/16"-18 x 3/4" Rd. Hd.	4
25	M-16742	Shield - Base	1
26	M-78815	Screen - Air	1
27	B-104342-1	Cord & Plug (3 Cond., Under 150 V.)	1
28	B-104342-2	Cord & Plug (3 Cond., 200-250 V.)	1
29	PC-3-32	Cotter Pin - 3/32" x 1/2"	1
30	M-9085	Rod - Bowl Lift	1
31	M-9086	Arm - Bowl Lift	1
32	PC-3-32	Cotter Pin - 3/32" x 1/2"	1
33	PT-3-39	Taper Pin - #2 x 3/4"	1
34	B-9079	Handle - Bowl Lift	1
	R-64898-8	Cord (3 Cond., 115 V./220 V., 50 Hz.)	1

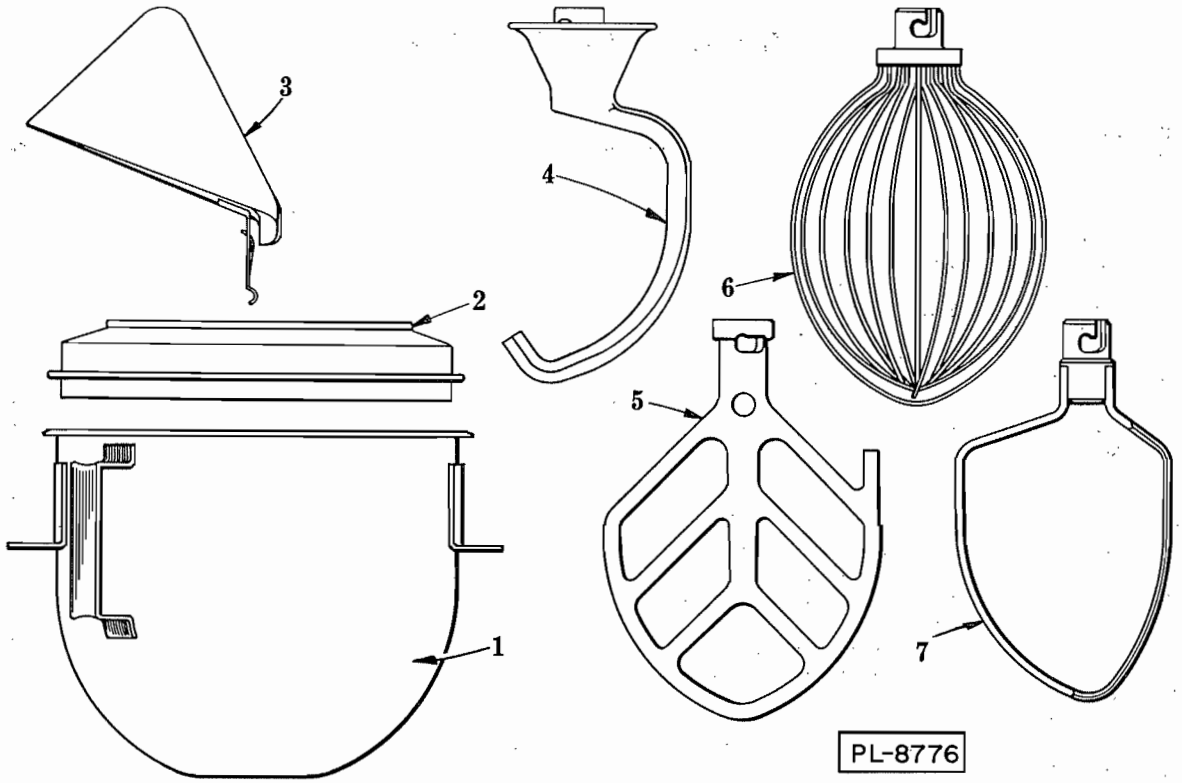

BOWL AND AGITATOR UNIT

ILLUS. PL-8776	PART NO.	NAME OF PART	AMT.
1	S-78575-2	Bowl - 5 Qt. (SST)	1
2	R-101164	Cover - Splash	1
3	R-16769	Chute - Bowl	1
4	R-78818	"E" Dough Arm	1
5	P-9033	"B" Flat Beater	1
6	P-77764	"D" Wire Whip	1
7	P-111157	"P" Pastry Knife	1