CATALOGUE OF REPLACEMENT PARTS

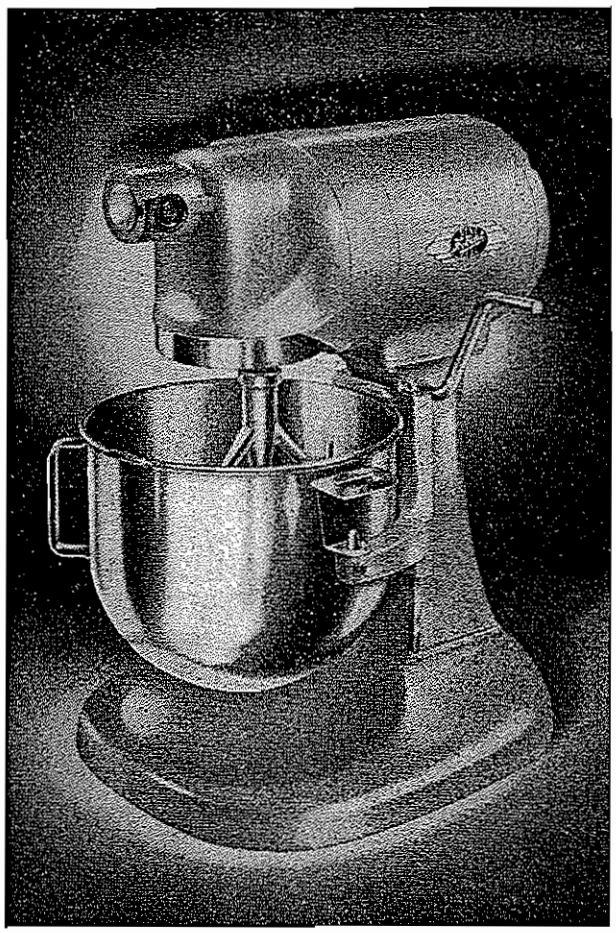

N-50 MIXER

For Commercial and Laboratory Use

Also Form 5682

THE HOBART MANUFACTURING COMPANY
TROY, OHIO, U. S. A.

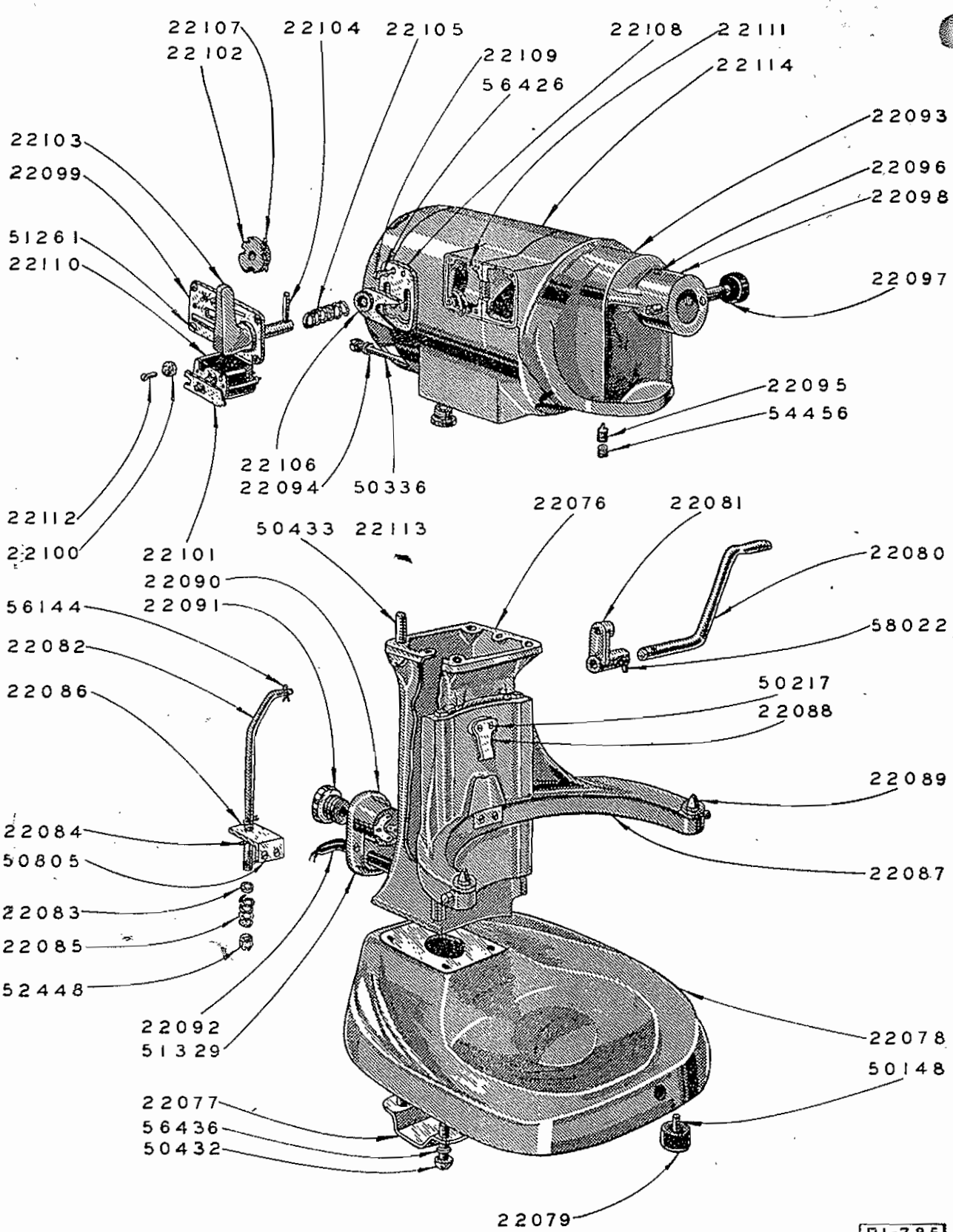
22107
22102
22104
22105
22108
22111
22109
56426
22114
22093
22103
22099
22096
22098
51261
22110
22097
22095
54456
22106
22094
50336
22112
22100
22101
50433
22113
22076
22081
22090
22091
22080
56144
58022
22082
50217
22088
22086
22089
22084
50805
22087
22083
22085
52448
22092
51329
22078
50148
22077
56436
50432
22079
PL-785

COLUMN AND BASE UNIT

Cat. No.	Part Name	Quantity	Factory No.	Code Word
22 076	Column	1	S-9065-1	Ebyhw
22 077	Shield for Base	1	M-16742	Ebyix
22 078	Base	1	S-9067-1	Ebyjy
22 079	Foot for Base	4	V-13983-1	Ebykz
22 080	Bowl Lift Handle	1	M-9079-1	Ebyla
22 081	Bowl Lift Arm	1	M-9086	Ebymb
22 082	Bowl Lift Rod	1	M-9085	Ebync
22 083	Washer	1	M-17000-3-7	Ecyod
22 084	"V" Washer	1	V-9236	Ebype
22 085	Spring	1	V-9237	Ebyrg
22 086	Bowl Lift Bracket	1	M-9080-1	Ebysh
22 087	Bowl Support	1	S-9066-1	Ebyti
22 088	Spring Latch for Bowl	1	V-9083-1	Ebyuj
22 089	Bowl Retaining Pin	2	V-4821	Ebyvk
22 090	Assy. of Fuse Block	1	M-9207	Ebywl
22 091	Fuse. Give number of Amperes	1	--------	Ebyxm
22 092	Cord and Plug	1	R-14144-3	Ebyyn
22 093	Transmission Case	1	S-9063-1	Ebyzo
22 094	Fibre Washer 13/32" OD x 7/32" ID x 1/32"	7	M-17000-2-30	Ebzac
22 095	Adjusting Screw for Tumbler Stop	1	V-9094	Ebzbd
22 096	Gits Oiler Style "GB" #522	1	--------	Ebzce
22 097	Thumb Screw	1	M-16740	Ebzeg
22 098	Attachment Hub Support Pin	1	V-5479	Ebzgi
22 099	Name Plate & Control Box Cover	1	M-21594	Ebzhj
22 100	Guide Disc	2	V-9056	Ebzik
22 101	Interlock Plunger	1	V-9057	Ebzkm
22 102	Interlock Disc	1	V-9059	Ebzmo
22 103	Shifter Handle & Shaft	1	P-10684-1	Ebzoq
22 104	Shifter Pin	1	P-11800-19	Ebzpr
22 105	Spring for Shifter Handle	1	V-7433	Ebzsu
22 106	Shifter Fork for Shifter Handle	1	P-10335	Ebztv
22 107	Cotter Pin 7/64" Dia. x 1" Lg.	1	--------	Ebzuw
22 108	Cam Plate	1	M-9062	Ebzwy
22 109	Cam Plate Retaining Screw	2	V-9091	Ebzya
22 110	Toggle Switch Single Pole, #7228 M. Handle	1	--------	Ecaac
22 111	Insulating Strip	1	V-11019	Ecabd
22 112	#4-40 x 5/16" French Hd. Mach. Screw	2	Plated	Ecace
22 113	3/8" Hard Rubber Socket Bushing	1	V-19077	Ecadf
22 114	Magnet Ring*	1	S-10717	Ecaeg
50 148	Round Hd. Mach. Screw, #8-32 x 1/2"	4	Steel	Iygym
50 217	Round Hd. Mach. Screw, #10-24 x ½"	2	Plated	Iylya
50 336	Round Hd. Mach. Screw, #12-24 x 2 ¾"	7	Steel	Iytdj
50 432	Round Hd. Mach. Screw, 5/16" -18 x ¾"	4	Steel	Izabk
50 433	Round Hd. Mach. Screw, 5/16"-18 x ¾"	4	Plated	Izacl
50 805	Flat Hd. Mach. Screw, #10-24 x ½"	2	Plated	Izxnu
51 261	French Hd. Mach. Screw, #6-32 x ⅜"	6	Plated	Jaykf
51 329	French Hd. Mach. Screw, #8-32 x ⅜"	2	Plated	Jebsk
52 448	Standard Hexagon Castle Nut, ¼"-28	1	Steel	Josqt
54 456	Hdless Set Screw, 5/16" x 18 x ⅜"	1	Steel	Kiapr
56 144	3/32" Dia. Cotter Pin ½" Lg.	3	Steel	Ktoyu
56 426	#12 Lockwasher 1/16" x 3/64"	2	Steel	Kumnj
56 436	5/16" Lockwasher ⅛" x 1/16"	4	Steel	Kunen
58 022	#2 Taper Pin ¾" Lg.	1	Steel	Leocq

* Motor parts are listed on separate sheets. If none is inserted in this book, ask for one when needed, giving us the serial number of your machine and the electrical specifications.

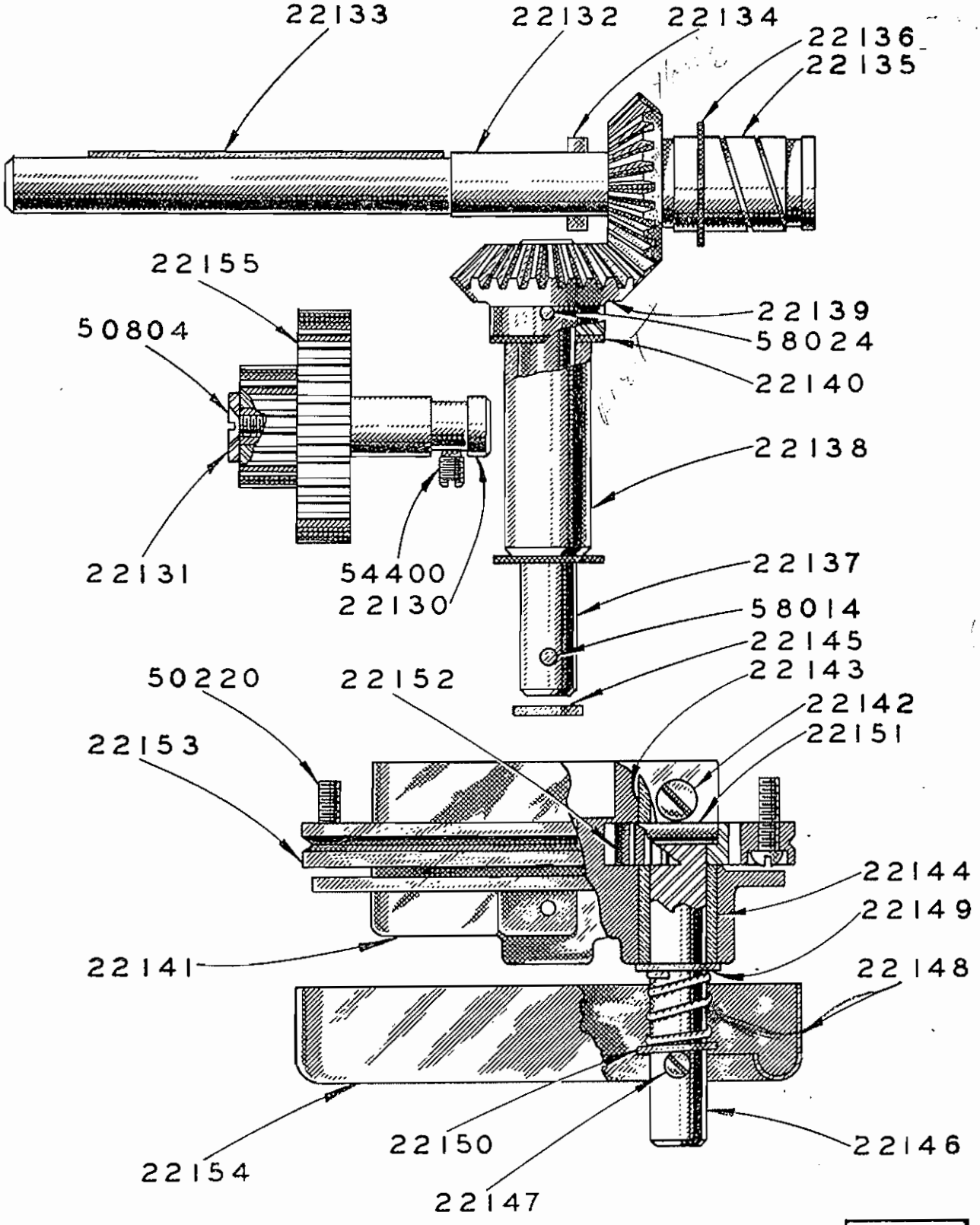
22133
22132
22134
22136
22135
22155
50804
22139
58024
22140
22138
22131
54400
22130
22137
58014
22145
22143
50220
22152
22142
22151
22153
22144
22149
22141
22148
22150
22146
22154
22147
PL-786

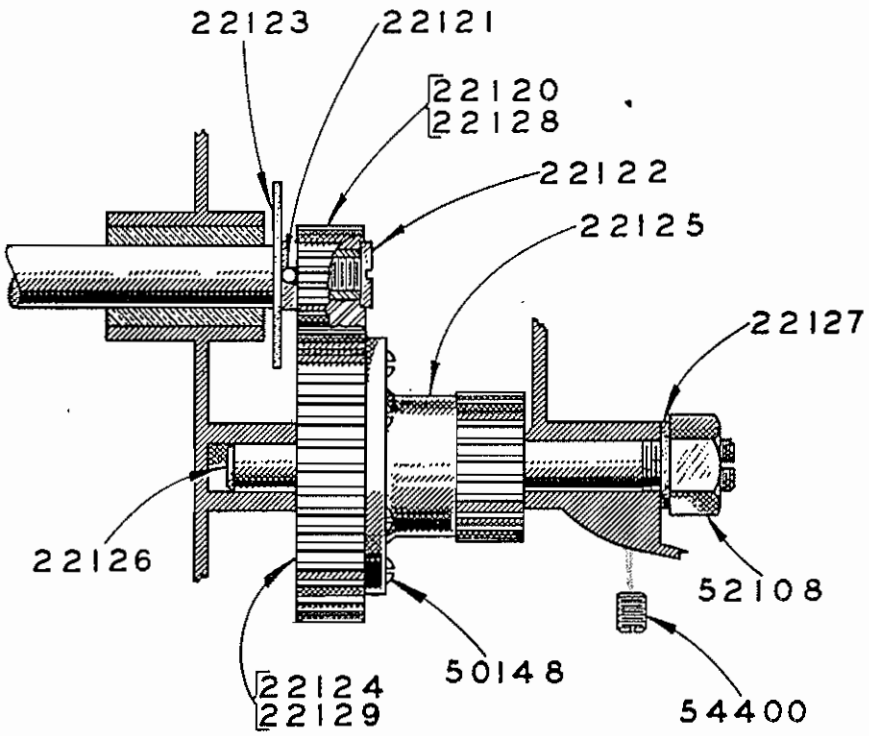

PL-791

Gearing Unit

Cat. No.	PART NAME	Quantity	Factory No.	Code Word
22120	Motor Pinion 15T - 22P	1	M-9421	Ecakm
22121	Pin	1	V-16777	Ecaln
22122	Pinion Retaining Screw	1	V-5247-2	Ecamo
22123	Baffle Plate for Motor Pinion	1	M-16747	Ecanp
22124	Main Drive Gear 49T - 22P	1	M-9392	Ecaoq
22125	Assy. of Flange Ring & Hub for Reduction Gear 15T - 16P	1	M-17864	Ecapr
22126	Eccentric Shaft	1	M-9088	Ecaqs
22127	Washer	1	V-6021	Ecart
22128	Motor Pinion 17T - 22P, 25 & 50 cycle only	1	M-16759	Ecasu
22129	Main Drive Gear 47T - 22P, 25 & 50 cycle only	1	M-16758	Ecatv
22130	Lower Transmission Shaft	1	V-9043	Ecauw
22131	Retaining Washer	1	V-9042	Ecavx
22132	Upper Transmission Shaft	1	M-9075	Ecawy
22133	Key for Upper Transmission Shaft	1	R-12430-23	Ecaxz
22134	Pin for Upper Transmission Shaft	1	P-11800-187	Ecaya
22135	Zerol Bevel Gear	1	M-20662	Ecazb
22136	Fibre Thrust Washer, 1½" OD x 13/16" ID x 1/32"	As Reqd.	M-17000-12-14	Ecbap
22137	Planetary Shaft	1	M-9040	Ecber
22138	Planetary Shaft Bearing	1	V-9039	Ecbds
22139	Zerol Bevel Gear	1	M-20661	Ecbct
22140	Fibre Thrust Washer, 1" OD ½" ID x 1/64"	As Reqd.	M-17000-7-25	Ecbfu
22141	Planetary	1	P-9028-1	Ecbix
22142	Bearing Retaining Screw	1	V-7602	Ecbjy
22143	Upper Planetary Bearing for Beater Shaft	1	V-7595	Ecbla
22144	Lower Planetary Bearing for Beater Shaft	1	V-9038	Ecbod
22145	Cupped Oil Stop Washer	1	V-4378	Ecbpe
22146	Beater Shaft	1	M-9037	Ecbsh
22147	Stud for Beater Shaft	1	V-3837	Ecbti
22148	Spring for Beater Shaft	1	V-5894	Ecbuj
22149	Washer for Beater Shaft, 1/32" x ¾" OD x 33/64" ID	1	M-17000-8-2	Ecbyn
22150	Washer	1	M-17000-7-21	Ecbzo
22151	Beater Shaft Pin	1	V-5988	Eccad
22152	Beater Shaft Pinion 18T - 18P	1	V-5087	Eccbe
22153	Internal Gear 59T - 18P	1	M-5428	Ecceh
22154	Drip Cup	1	P-21625	Eccfi
22155	Assy. of Transmission Gears	1	M-9047	Eccil
50148	Round Hd. Mach. Screw, #8-32 x ½"	6	Steel	Iygym
50220	Round Hd. Mach. Screw, #10-24 x ⅝"	4	Steel	Iymcs
50804	Flat Hd. Mach. Screw, #10-24 x ½"	1	Steel	Izxkr
52108	Hexagon Nut, ⅜" - 16	1	Steel	Jiwyk
54400	Headless C. P. Set Screw, ¼"-20 x ¼"	2	Steel	Khuiv
58014	#1 Taper Pin 1" Lg.	1	Steel	Lemoc
58024	#2 Taper Pin 1" Lg.	1	Steel	Leoes

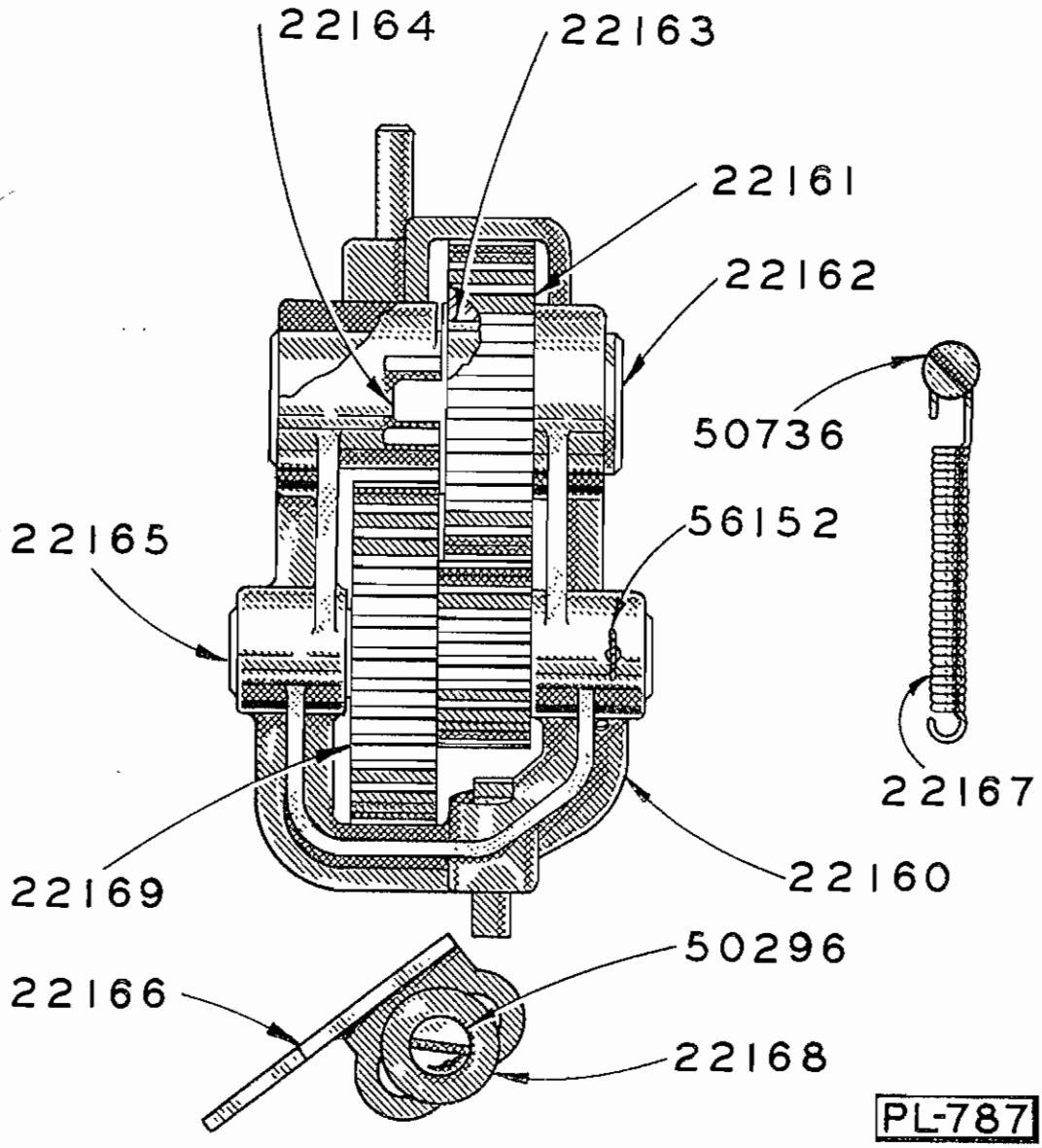

Tumbler Unit

Cat. No.	PART NAME	Quantity	Factory. No.	Code Word
22 160	Tumbler Yoke	1	R-9027	Eccru
22 161	Transmission Gear 31T - 16P	1	M-9048	Eccsv
22 162	Shifter Sleeve	1	M-9050	Ecctw
22 163	Key, used with No. 22161	1	R-12430-22	Eccux
22 164	Shifter Sleeve Retainer	1	V-9051	Eccvy
22 165	Tumbler Shaft	1	V-9052	Eccxa
22 166	Stop for Tumbler Yoke	1	M-9090	Eccyb
22 167	Spring for Tumbler Yoke	1	M-10973	Ecdaq
22 168	Washer	1	M-17000-3-7	Ecdbr
22 169	Transmission Gear Assy. on Tumbler Shaft	1	M-9047	Ecdcs
50 296	Round Hd. Mach. Screw, #12-24 x 3/4"	1	Steel	Iyqsk
50 736	Flat Hd. Mach. Screw, #8-32 x 3/8"	1	Stecl	Iztch
56 152	3/32" Dia. Cotter Pin 1" Lg.	1	Steel	Ktugh

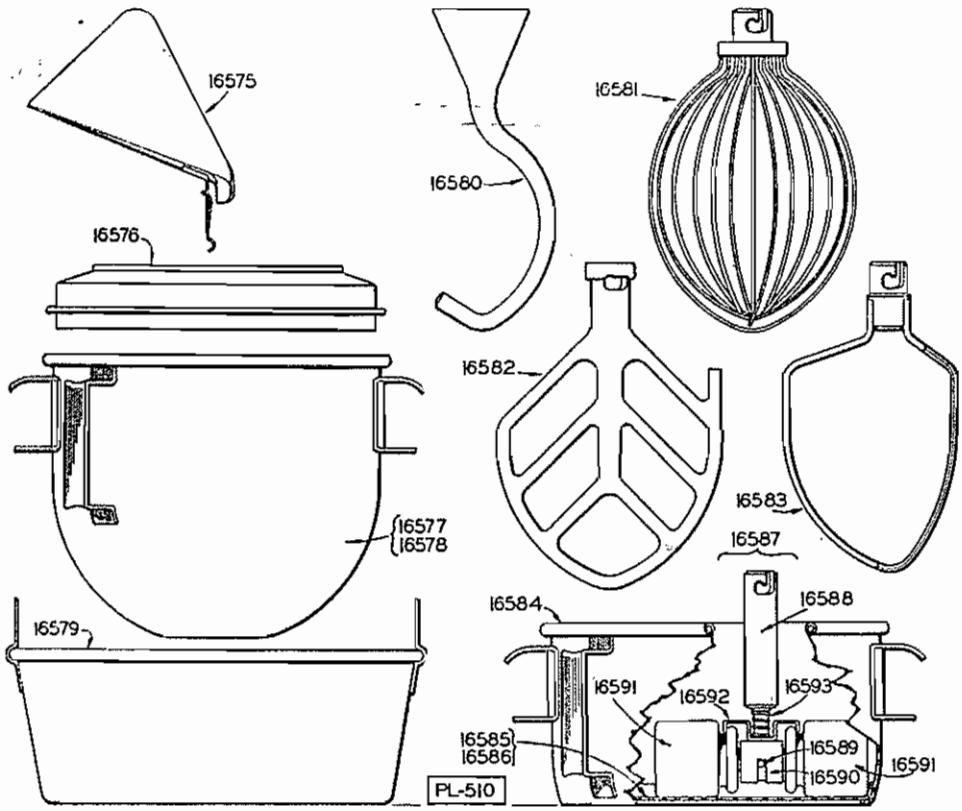

Bowls and Beaters Unit

Cat. No.	PART NAME	Quantity	Factory No.	Code Word
16 575	Bowl Chute	1	R-16769	Cureh
16 576	Splash Ring	1	P-9506	Curfl
16 577	5-Quart Bowl (Tinned)	1	R-16800-1	Curil
16 578	5-Quart Bowl (Stainless Steel)	1	R-16800-2	Curkn
16 579	Ice and Hot Water Jacket	1	R-16746	Curlo
16 580	Dough Hook (N-5-EA)	1	P-9202	Curor
16 581	Wire Whip (N-5-D)	1	P-9034	Curps
16 582	Flat Beater (N-5-B)	1	P-9033	Curru
16 583	Pastry Knife (N-5-PK)	1	P-9205	Cursv
16 584	Colander Jacket	1	R-9240	Curtw
16 585	Colander Disc, small holes	1	P-9447	Curux
16 586	Colander Disc, larger holes	1	P-9444	Curvy
16 587	Colander Roller Completely Assembled	1	M-9621	Curxa
16 588	Roller Holder Shank	1	M-9238	Curyb
16 589	Pin, roller holder to shank	1	P-11800-29	Cusar
16 590	Roller Holder	1	M-9239	Cusbs
16 591	Colander Rollers	2	V-8808	Cuset
16 592	Clip for Colander Rollers	1	M-10250	Cusdu
16 593	Spring for Clip	1	V-5490	Cusev

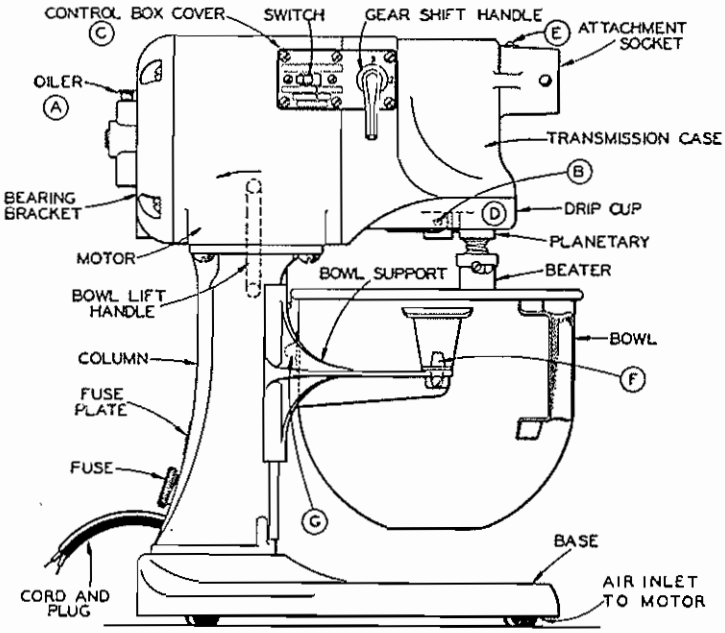

Fig. 1

Instructions For Model M

HOBART LABORATORY MIXER

CONNECTIONS Before plugging into a socket the first time, make sure that the electrical specifications of the line are the same as called for on the name plate C.

The motor is protected by a plug fuse which is screwed into a socket on the rear of the machine. Additional fuses may be purchased at any electrical supply store at small cost. The ampere rating of the required fuse is stamped on the Fuse Plate. Never use any other size.

LUBRICATION Very little lubrication is required. Once a month put three drops of oil in the oiler A at the back of the motor, and a like amount in oiler E on the attachment hub.

The transmission gearing is lubricated by a special grease that will last for several years of normal use. Consult a Hobart Service man before adding grease.

After using the machine for a year or two, have the service man lower the planetary and grease the teeth of the internal gear. The planetary is held to its shaft by a taper pin B.

SPEED CHANGING There are three speeds. To change from one speed to another, switch off the motor and move the Gear-shift Handle to the required number. As shown in the illustration, the handle is set for No. 1 or slow speed. The Gear-shift [illegible] is interlocked with the switch so that it can be moved only when the switch handle is at "OFF".

BOWL To put on the bowl, first locate the back lug G in its proper place, then snap down the side ears over the locating pins F.

BEATERS Beaters are available in various designs to suit the class of work to be performed. See fig. 2.

FLAT BEATER - B - For mixing heavier batters, mashing potatoes, and general purposes.

WIRE LOOP WHIP - D - For beating eggs, whipping cream, and all light, fast work.

DOUGH HOOK - E - For kneading coffee cake, roll dough, and the heavier work. Use on No. 1 speed.

PASTRY KNIFE - PK - For biscuits, pie crust, short cake, and pastry of various kinds.

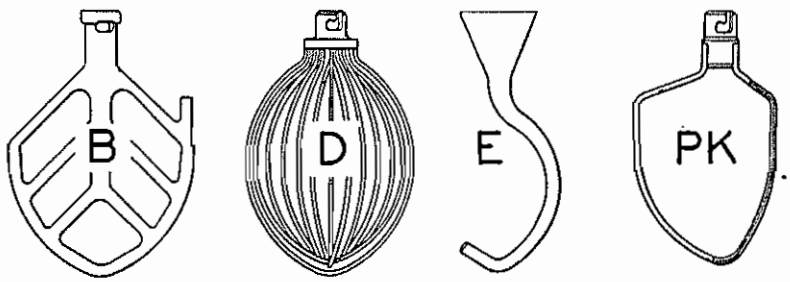

Fig. 2

BOWL LIFT Move the bowl-lift handle back as shown by the arrow in fig. 1 to lower the bowl for changing beaters. Lowering also makes the bowl more accessible for filling.

To mash potatoes, or to cream butter, start with the bowl down and raise it slowly into working position as the materials break up.

ATTACHMENTS Among the attachments available for this machine are:

Meat Chopper
Vegetable Slicer
Shredder
Ice Chipper
Splash Cover
Salad Oil Dropper
Colander Outfit
Pouring Chute
Ice Jacket

THE HOBART MANUFACTURING CO.
TROY, OHIO, U.S.A.