HOBART

INSTRUCTION MANUAL

MODELS FT-600 & FT-700 SERIES DISHWASHERS

A product of HOBART CORPORATION TROY, OHIO 45374

FORM 12777A (Rev. 4-82)

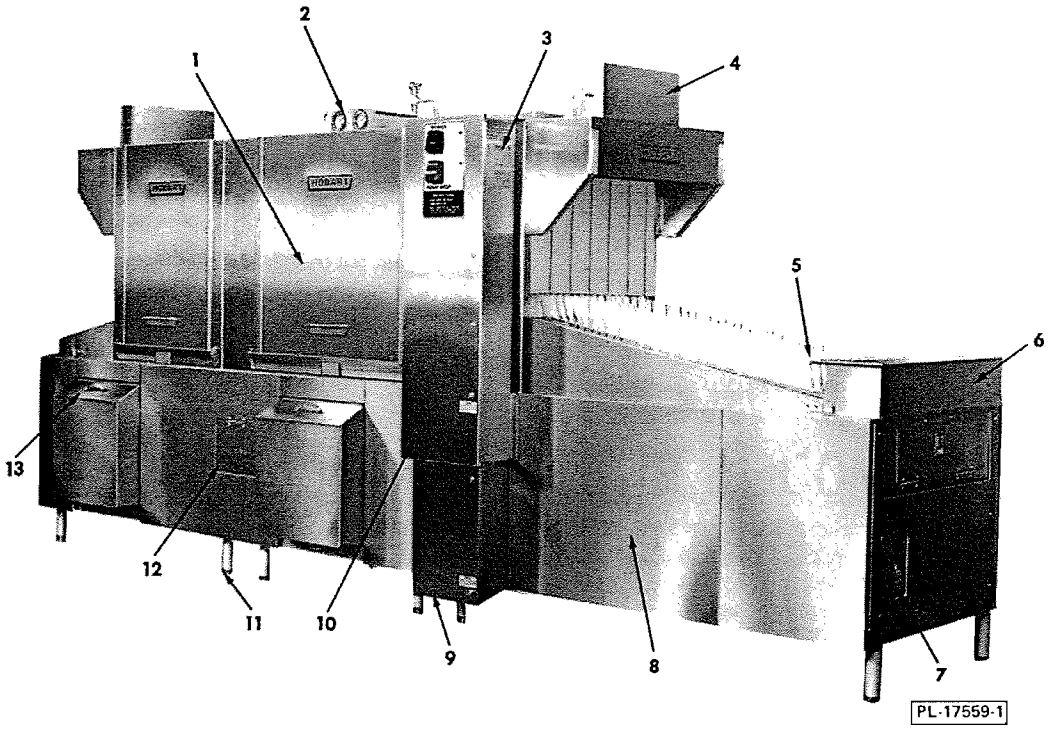

Fig. 1

Installation, Operation and Care of MODEL FT-600/700 DISHWASHERS Save These Instructions

GENERAL

The FT-600 (Flight-Type) dishwasher is made up of three units: Prewash (loading section); Power Wash and Discharge (unloading section). The FT-700 (Flight-Type) dishwasher is made up of four units: Prewash (loading section); Power Wash; Power Rinse and Discharge (unloading section). Although the loading and unloading sections are available in different lengths and have various combinations of equipment, the following instructions cover all models.

The Prewash unit (loading section) may be 44" or 60" long and has a 1 H.P. pump motor.

The Power Wash unit is 44" long and has a 2 H.P. pump motor.

The Power Rinse unit (FT-700 only) is 44" long and has a 2 H.P. pump motor.

The Discharge unit (unloading section) may be 44", 60", 78", 96", 114" or 132" long and has a 1/2 H.P. conveyor drive motor.

All models are available for either right to left or left to right operation. The direction of operation cannot be changed in the field.

A conveyor brake is standard on all models.

Controls are mounted on the Discharge unit and contained in a stainless steel control box.

Watertight interlock switches are provided on the inspection doors and the conveyor brake. The machine cannot be started until all interlocked components are in their operating positions. If, during operation, an inspection door is opened or the water in the wash or rinse tank falls below operating level, the pumps will stop. If the conveyor brake is tripped, the conveyor will stop. To restart, the component(s) and/or water level must be returned to the correct operating position, and the conveyor start button must be pushed.

INSTALLATION

LOCATION

Models up to and including 14 feet long are shipped completely assembled. Locate the machine as

close to its operating position as possible before removing from skid. Once machine has been placed on the floor, avoid unnecessary moving, as machine alignment and watertight joints may be disturbed.

Longer models are shipped in two, three or four sections and must be assembled on site. Locate the sections as close to their operating position as possible before removing from skids. Once the sections have been joined together, avoid moving as machine alignment and watertight joints may be disturbed.

DO NOT remove any tags or labels until the installation is complete. Check to assure that appropriate electrical, plumbing and exhaust accommodations are provided at the installation location. Before unpacking, take measurements of site's drain, electrical and exhaust installations. Then take corresponding measurements of machine or machine sections to assure correct mating of all connections.

UNPACKING

CAUTION: Do not use a forklift to move or lift machine or machine sections.

Assembled Machines

(Shipped as one piece) — Remove all cover panels (8, Fig. 1) and open all inspection doors (1, Fig. 1). Remove all wrapped parts and boxes from interior of machine.

Remove shipping supports from feet. Raise machine vertically and slide the skid from under machine. Plug tapped holes in feet with plastic plugs (furnished). Thread the adjustable feet (11, Fig. 1) in as far as possible.

Make final adjustments to machine location. Make a visual inspection to assure all plumbing, electrical and exhaust connections align properly.

Level the machine, front to back and end to end, by placing a level at various points on the frame (7, Fig. 2) and adjusting the feet (11, Fig. 1) as necessary.

Multi Section Installations

Remove all cover panels (11, Fig. 2) and open all inspection doors (1, Fig. 2) . Remove all wrapped parts, boxes and conveyor section from interior of each machine section.

Remove shipping supports from feet. Raise section vertically and slide the skid from under each

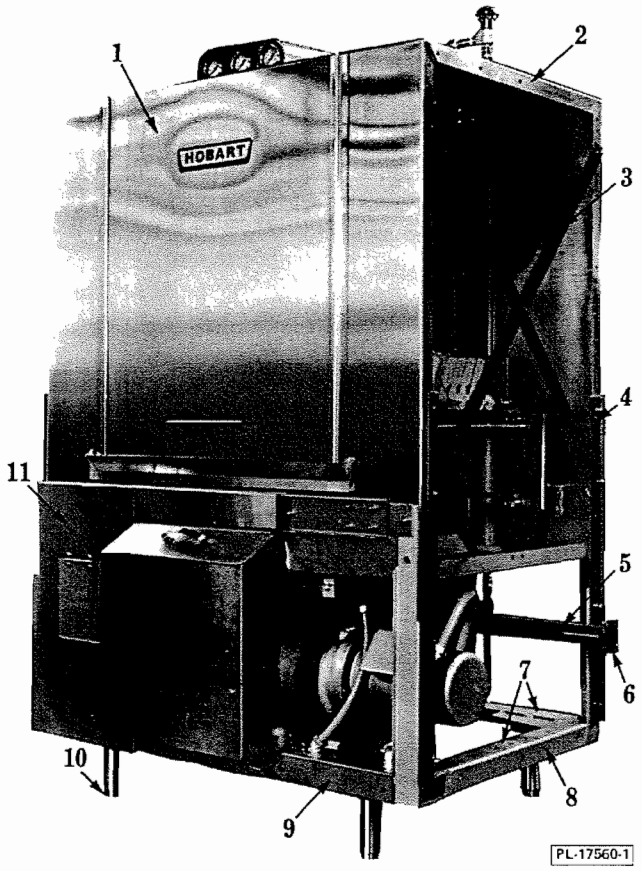

Fig. 2

section. Plug tapped holes in feet with plastic plugs (furnished). Thread the adjustable feet (10, Fig. 2) in as far as possible.

Remove: flow back pipe brace (5, Fig. 2); chamber to frame braces (4, Fig. 2); chamber braces (3, Fig. 2) and any other packaging, tape, wire or bracing that may be unique to a particular machine section.

SECTION ASSEMBLY

When assembling TWO section machines, it makes no difference which section is positioned and leveled first. However, when assembling MULTI - section machine it is very important to begin with the center section(s) and work outward.

One complete section assembly is described in the following paragraphs. For multi-section assemblies it will be necessary to repeat this procedure as required.

Make final position adjustments to the Loading section of two section machines or the Power Wash section of three and four section machines.

Level the section front to back and end to end by placing a level at various points on the frame (7, Fig. 2) and adjusting the feet (10 Fig. 2) as necessary.

Cut strips of pressure sensitive vinyl foam tape (roll furnished) to fit completely around the discharge end flanged face (2, Fig. 2). Use care to butt the tape end to end, assuring a good seal.

Move the Unloading section of two and three section machines or the Power Rinse section of four section machines to within three inches of its final position (relative to the leveled section).

Peel the protective paper from the foam tape.

Adjust the second section's feet, adjacent to the leveled section, the SAME HEIGHT as the leveled section.

Adjust the discharge end feet LOWER than the mating end, thus allowing the lower frames (8, Fig. 2) of the two sections to touch when pushed together, leaving the flanged faces (2, Fig. 2) apart.

Although each section is pre-wired, it must be electrically connected to the mating section in the wire channel. The connecting leads extending from the wire channel are held to the frame for shipment with tape. Remove the shipping tape from both sections.

Remove the wire channel covers (9, Fig. 2).

Move the second section to its final position, making sure the wire leads enter the wire channel properly, not pinched or crimped.

Using a drift pin, align lower frame holes of the two sections. Bolt the lower frames together.

Raise the discharge end of the second section and level the section.

Using a drift pin, open and align all holes in the flanged faces (2, Fig. 2) of the mated sections. Use care not to tear the foam tape seal. Bolt the chambers together.

A saddle joint is made up of two saddle halves (1 & 4, Fig. 3) and a saddle connector (2, Fig. 3). Place the saddle halves and connector in position over the seam between the two tanks, to verify that the components are in the correct location and that ALL bolt holes align. After verification, remove components.

Run strips of ribbon sealer the width of both tanks, even with the tank's top edge.

Completely cover both saddle flanges (3, Fig. 3) with ribbon sealer.

Locate one saddle half (4, Fig. 3), flange (3, Fig. 3) against machine wall, over the tanks' seam.

Locate the other saddle half (1, Fig. 3) over tanks' seam, butting the two halves nose to nose, then lower the flange end into position.

Cut five pieces of ribbon sealer the length of the saddle connector (2, Fig. 3).

Lay two, one above the other, on each side and one over the top of the saddle joint. The seam (5, Fig. 3) created by the two saddle halves, should be completely covered with ribbon sealer.

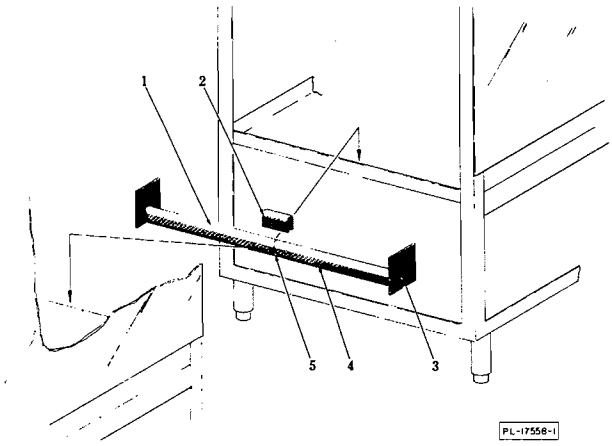

Fig. 3

Place the saddle connector (2, Fig. 3) over the ribbon sealer and bolt in position.

All wires to be connected are marked with flags. Refer to channel covers (9, Fig. 2) to identify correct connections. Locate correct flags from each section and press connectors together. Do not let connectors lay on channel floor.

Replace channel covers (9, Fig. 2) on two section machines.

Slide the gasket between the flanges (6, Fig. 2) of the flow back piping and bolt flanges together.

Connect the union for Unloading to Loading section feed-back piping (FT-700 only).

Bolt the dish guides (1, Fig. 4) and tracks (2, Fig. 4) between sections together.

Install the drain back pans (see curtain diagram).

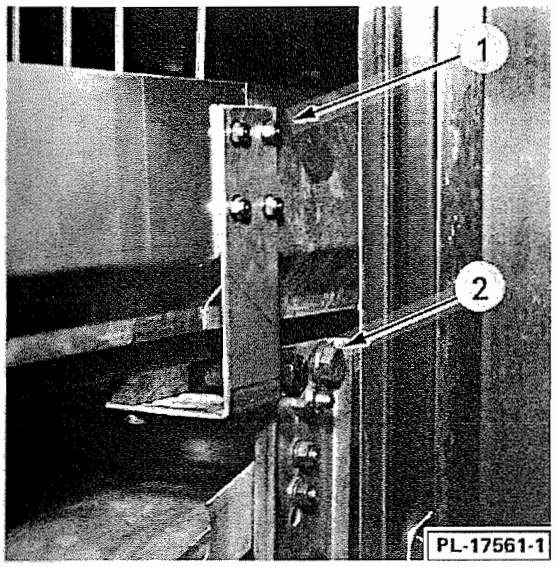

Fig. 4

CONVEYOR ASSEMBLY (Multi-Section Machines)

Each section is furnished with the correct amount of conveyor. The order of conveyor assembly is unimportant.

Release the slip clutch (3, Fig. 5), allowing the drive sprockets to turn freely, by using a spanner wrench or inserting a punch in one of the holes in the spanner nut and turning counterclockwise as required.

Remove the loading and unloading platforms (6, Fig. 1).

Loosen the locknuts (4, Fig. 6) and turn the adjusting nuts (3, Fig. 6) as required to move the Take-Up unit as far forward (toward center of machine) as possible.

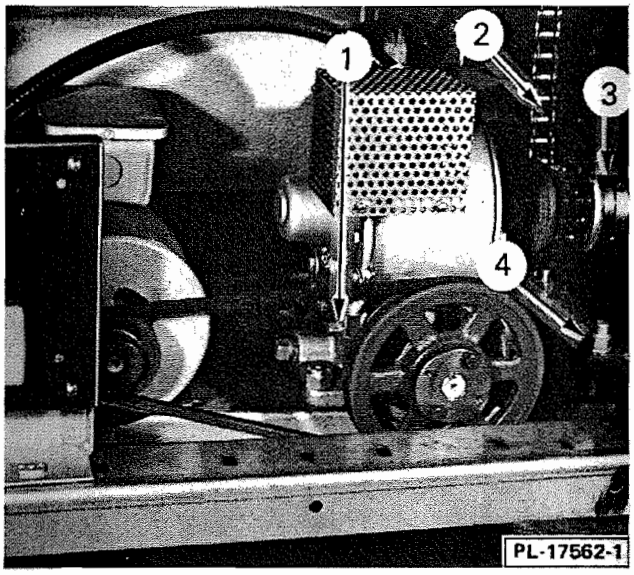

Fig. 5

Pivot and secure the hinged conveyor safety stop (5, Fig. 1) away from conveyor sprockets.

Position the first section of conveyor, parallel to the machine, in front of the load end. The flight link tips MUST slope away from the machine. Attach a rope to the conveyor rod closest to the machine. Pass the rope in the loading end, the length of the machine, around the drive sprockets (8, Fig. 6) and return to the loading end. The rope MUST follow the desired path of the conveyor. Use caution not to confuse the path when threading the rope.

Begin feeding the conveyor section in the machine with conveyor rollers on upper tracks. Draw the section through the machine by pulling the rope. With about 6" of conveyor remaining on the floor, tie the rope off to maintain tension on conveyor section.

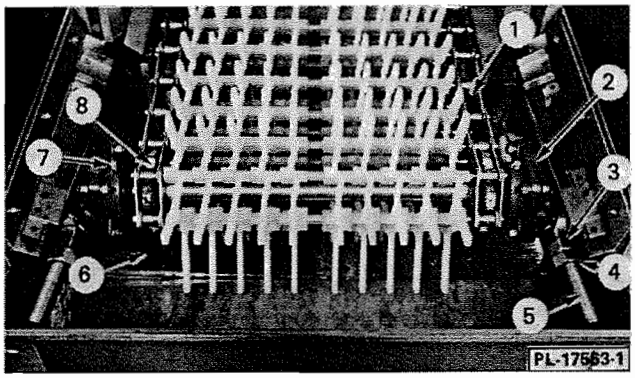

Fig. 6

Move the next conveyor section into position. The flight link tips MUST slope away from the machine. Remove a conveyor rod from one of the conveyor section ends. Join the two sections together with the rod.

Draw the conveyor into the machine by pulling the rope. When the conveyor reaches the drive sprockets (8, Fig. 6), carefully guide the conveyor rollers around the sprockets and on top of the lower tracks. Draw the remainder of the section thru the machine.

When the final section has been drawn into the machine, remove a conveyor rod from one end of the conveyor. Join the two ends of conveyor with the rod, making a continuous length of conveyor.

Take up the slack in the conveyor by adjusting the Take-Up unit. Proper tension on the conveyor is

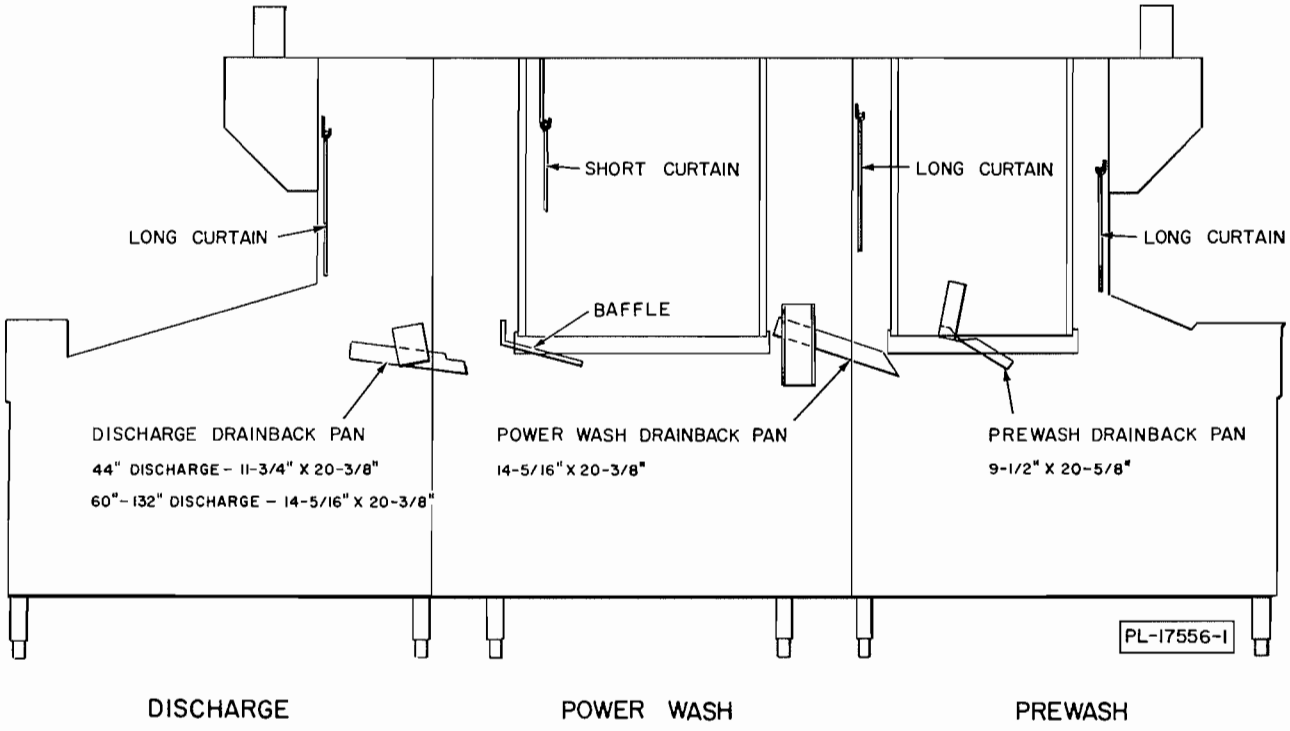

FT-600
CURTAIN DIAGRAM

IMPORTANT. An incorrect adjustment may cause excessive conveyor wear or conveyor jamming. Refer to **MAINTENANCE** for recommended adjustment procedure.

NOTE: Check the set screws in the sprockets (8, Fig. 6) and bearing blocks (2, Fig. 6) to assure they are tight.

Free the conveyor safety stop (5, Fig. 1) and return to original position. Replace the loading and unloading platforms (6, Fig. 1).

Adjust the slip clutch (3, Fig. 5) for load requirements. Refer to **MAINTENANCE** for recommended adjustment procedure.

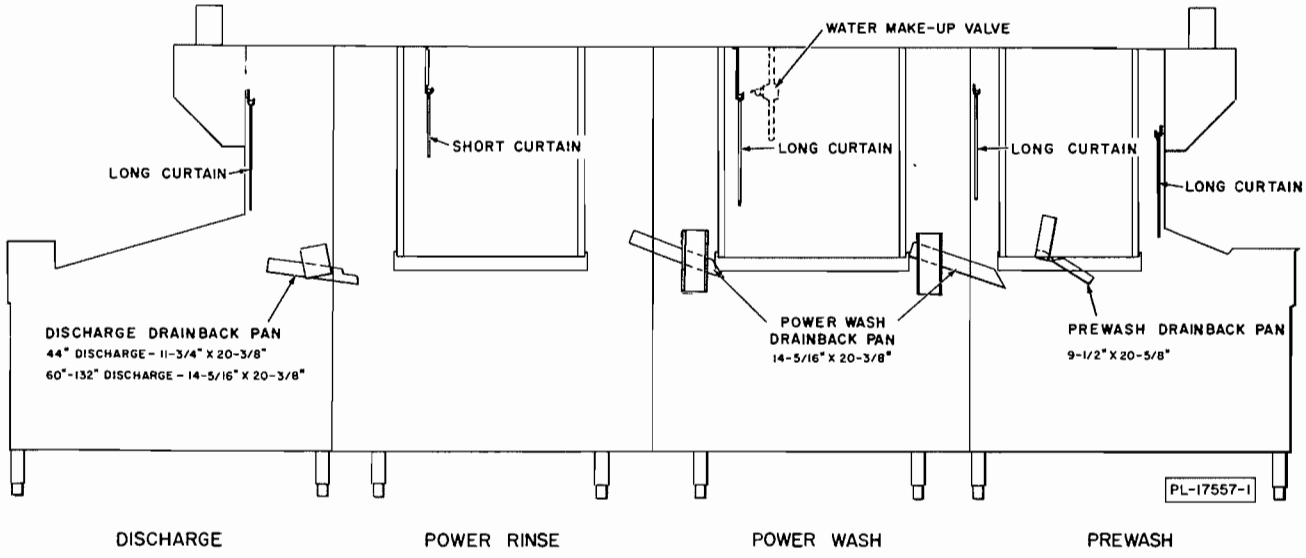

FT-700
CURTAIN DIAGRAM

PLUMBING CONNECTIONS

Plumbing connections must be made by qualified workmen who will comply with applicable sanitary, safety and plumbing codes.

The PLUMBER who connects this machine is RESPONSIBLE for making certain that both water and steam lines are THOROUGHLY FLUSHED OUT BEFORE connecting to any manual valve or solenoid valve.

This "flush-out" is necessary to remove from the lines all foreign matter such as chips (resulting from cutting or threading of pipes), joint make-up compound, or, if soldered fittings are used, bits of solder or cuttings from the tubing. Debris, if not removed, will lodge in these valves and render them inoperative.

Manual valves or solenoid valves, fouled by foreign matter and any expenses resulting from this fouling, are NOT the responsibility of the manufacturer.

Drains

Drains below each tank are connected to sewer using 2" pipe.

Machines equipped with optional common drain have prewash, power wash, power rinse (FT-700 only) and discharge drains already connected, thus requiring only one drain connection.

If a grease trap is required by code, its design should be based on a flow rate of 35 gallons per minute for machines with common drain or 30 gallons per minute per tank for machines without common drain.

Fill

If machine is not equipped with common fill piping, one connection (1/2" for FT-600, 3/4" for FT-700) at the wash tank and one 3/4" at the discharge unit for the final rinse are required.

If machine is equipped with common fill piping (for fill and booster), one 1-1/4" connection is required at the wash tank.

All machines equipped with Prewash Temperature Control require a seperate cold water line to the 1/2" union at the Prewash unit.

Steam (Tank Heat)

The steam supply must be between 15 and 50 P.S.I. flowing pressure. Steam flow is controlled by solenoid valves as well as mechanical globe valves.

FT-600 - One 3/4" connection at the Power Wash unit is required for steam coil or steam injector installations.

If machine is equipped with a steam booster, two connections are required, one 3/4" at the Power Wash unit (tank heat) and one 1" at the Discharge unit (steam booster).

If machine is equipped with common steam piping, only one connection is required, a 2" connection at the Power Wash unit.

FT-700 - Two 3/4" connections are required for steam coil or steam injector, one at the power wash unit (tank heat) and one at the power rinse (tank heat) unit.

If machine is equipped with a steam booster, three connections are required, one 3/4" at the Power Wash unit (tank heat), one 3/4" at the Power Rinse unit (tank heat) and one 1" at the discharge unit (steam booster).

If machine is equipped with common steam piping (tank heat), one connection is required, a 1-1/2" connection at the Power Wash unit.

If machine is equipped with common steam piping (tank heat) and steam booster, one connection is required, a 2" connection at the Power Wash unit.

ELECTRICAL CONNECTIONS

Before making electrical connections, check the specifications on the data plate (3, Fig. 1) to assure they agree with those of your electrical service. Electrical connections should be made by qualified workmen who will observe all applicable Safety Codes and the National Electrical Code.

WARNING: DISCONNECT ELECTRICAL POWER SUPPLY AND PLACE A TAG, INDICATING THE CIRCUIT IS BEING WORKED ON, AT THE FUSED DISCONNECT SWITCH.

Most electrical codes (local, state or national) require the power circuit for the dishwasher to have a disconnecting device (NOT FURNISHED) such as a fused disconnect switch, for both the motor circuit and heat circuit. Make sure the installation complies with codes of your area.

BRANCH CIRCUIT SIZE AND PROTECTION

FT-600
Motors and Steam Heat

Voltage	Ph	Maximum Dual Element Size	Minimum Supply Circuit Conductor Ampacity	60°C Copper Wire Size Except as Noted
200-230	3	25	25	10
400-460	3	15	15	14
		Motors and Electric Heat (30 KW Standard)		
200	3	150	150	0*
230	3	150	150	0*
460	3	70	70	4
		FT-700 Motors and Steam Heat		
200-230	3	30	30	10
400-460	3	15	15	14
		Motors and Electric Heat (40 KW Standard)		
200	3	175	175	00*
230	3	175	175	00*
460	3	90	90	2

*Incoming services larger than 100 Amps. require the use of 75°C minimum rated wire.

The above chart only includes standard machines. The addition of condensers (1 to 2), blower dryer, and additional tank heat will change the rated incoming service and fuse sizes.

A single electrical connection is required for motors and tank heat.

If machine is not equipped with circuit breakers, connect a permanent electrical power supply to the terminal block (1, Fig. 7) inside the transition box (9, Fig. 1), located below the main control box. The service ground is connected to the ground lug marked GRD (2, Fig. 7).

If machine is equipped with circuit breakers, connect a permanent electrical power supply to the terminal block (1, Fig. 7) inside the circuit breaker portion of the main control box (10, Fig. 1). The service ground is connected to the ground lug marked GRD (2, Fig. 7).

Before placing machine into service, a check must be made to verify correct direction of motor rotation. Since all motors are wired to rotate the same direction at the time of manufacture, only one check need be made.

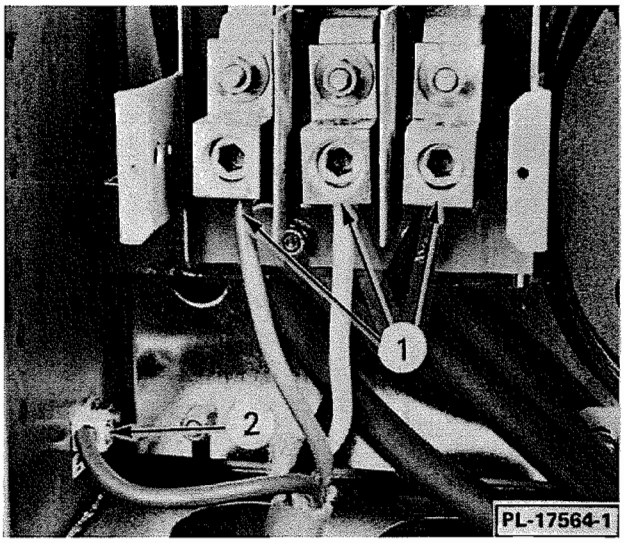

Fig. 7

Energize the machine momentarily. The conveyor must move from entrance end to discharge end. If incorrect motor rotation is found, **DISCONNECT ELECTRICAL SUPPLY** and interchange any two power supply leads at the terminal block (1, Fig. 7). Energize machine momentarily and verify correct direction of conveyor travel.

MISCELLANEOUS

Vent Ducts

Fit overhead vent ducts (supplied by others) inside the machine vents (4, Fig. 1). Bolt in place. The damper should be locked in a horizontal position. Refer to **MAINTENANCE** for recommended adjustment procedure.

Arm Assemblies

Install the prewash, wash, rinse (FT-700 only) and final rinse arm units. Care must be exercised to install each arm in its correct location. Each arm is marked with an identification tag.

The nozzle angle on final rinse arms is critical. The upper final rinse arm nozzles should angle 10° - 15° toward the loading end. The lower final rinse arm nozzles should angle 5° - 10° toward the loading end. Refer to **ADJUSTMENTS** for recommended adjustment procedure.

Thermometer Connections

If thermometers (2, Fig. 1) were disconnected for shipping purposes, carefully uncoil the senders.

Insert the senders through the baffle assemblies and route to the respective tank or final rinse piping.

Speed Reducer

Remove the gear case plug. The oil level should be even with the bottom of the plug hole. If oil is below this level, fill from container labelled "This Oil for Gear Case Only".

Motor Vents

The motor vent(s) (Fig. 8) should be located 1/2" to 1" below the machine frame with the opening parallel to the floor. The motor vent opening(s) MUST be located so as to allow the intake of room-temperature air. For example, the motor vent(s) must be relocated if the opening is above or near steam piping or other sources of heat.

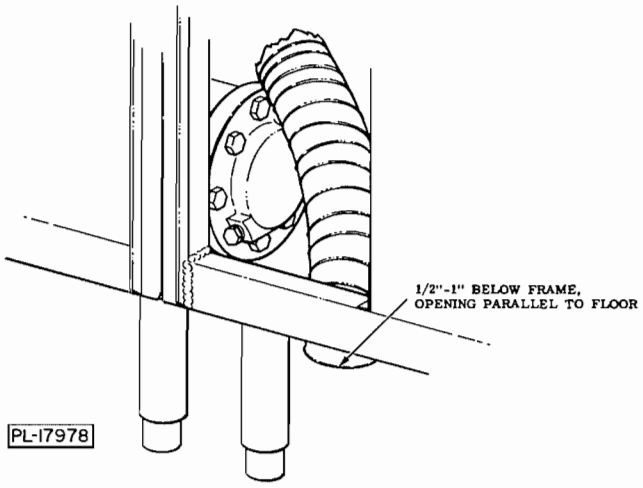

Fig. 8

Rinse Sprayers and Pipe

Upper and lower final rinse pipes should be thoroughly cleaned after the first few days of operation. The hole in the rinse nozzles may be cleaned with a wire or paper clip. Push any obstruction into the rinse arm, unscrew the end caps and flush out the pipes by operating the rinse actuator while the conveyor is running. This will remove all pipe scale and plumber's cement. KEEP HANDS AWAY FROM HOT WATER.

OPERATION

PREPARATION

Install strainer pans (13, Fig. 1) (2 for FT-600, 3 for FT-700). Each pan is key drilled for pin alignment to insure correct location. Install strainer baskets (13, Fig. 1). Install prewash (60" only) and discharge drain screens. Hang curtains on open hooks provided (see curtain diagram).

Close all inspection doors (1, Fig. 1). Close all drain valves

FILLING

Swing and raise door (12. Fig. 1) marked "Fill" and/or "Valve Access" and open fill valve. This valve fills both wash and rinse tanks (FT-700 only). The prewash tank is filled by the connecting pipe from the power wash and power rinse tanks. Let fill valve remain open until the prewash tank is filled to the overflow level.

If machine is equipped with automatic fill, make sure the manual fill valve, ahead of the solenoid valve, is open. Drain valves are interlocked and must be closed with power ON before tanks can be filled. A flashing light (2, Fig. 9) on the control panel indicates a drain(s) is still open. The wash, rinse and prewash tanks will fill to the proper level and automatically shut off.

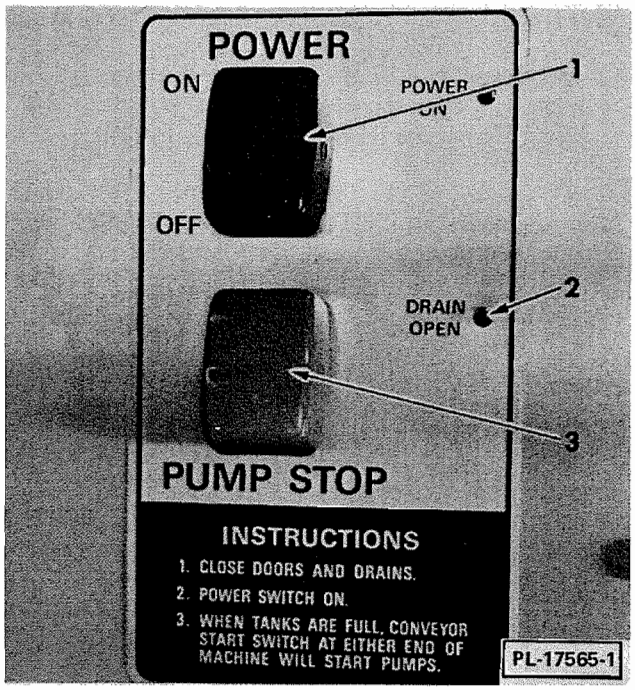

Fig. 9

WATER MAKE-UP

FT-600 - All make-up is through the final rinse. Correct make-up flow depends upon the nozzle angle on the final rinse arms. The upper final rinse arm nozzles should angle 10° - 15° toward the loading end. The lower final rinse arm nozzles should angle 5° - 10° toward the loading end.

The make-up is preset at the factory to deliver the correct amount at 20 P.S.I. If installation pressure is not 20 P.S.I and adjustment is required, refer to **MAINTENANCE** for recommended adjustment procedure.

FT-700 - A measured amount (1.5 to 2 gallons per minute) of fresh water is added to the wash tank when final rinse actuator is tripped during conveyor operation.

The adjustable valve is preset at the factory to deliver the correct amount of water at 20 P.S.I. If installation pressure is not 20 P.S.I. and adjustment is required, refer to **MAINTENANCE** for recommended procedure.

CONTROLS

NOTE: Dishwashers having the most controls will be described. Since all machines are similar, refer to the portions applying to your specific machine.

Power to machine, tank heat, and auto fill (optional) is uspplied through the ON/OFF Rocker Style switch (1, Fig. 9).

The pumps are started by the conveyor START switch (7, Fig. 1), if the tanks are full, and are turned off by the STOP switch (3, Fig. 9).

The conveyor is operated from Rocker-Style switch stations (7, Fig. 1) on both ends of the dishwasher. The conveyor circuit may also be broken by tripping the conveyor safety stop (5, Fig. 1).

The conveyor speed is 5.5 feet per minute for an FT-600 and 8.2 feet per minute for an FT-700. Conveyor speed is not adjustable.

Heaters

Dishwasher operation cools tank water so additional heat must be supplied. The tank water MUST BE at operating level before tank heat will operate. A float controlled low water protection switch will automatically turn heat off if the tank is drained or water level falls for any reason.

Regulate the heat so the following temperatures will be maintained:

Prewash Unit	140° F Max.
Power Wash Unit (FT-600 Only)	160° F Min.
Power Wash Unit (FT-700 Only)	150° F Min.
Power Rinse Unit (FT-700 Only)	160° F Min.
Final Rinse	180° F Min.

DISHWASHING

A definite system of stacking and sorting the pieces will make operation more efficient.

Loading

All dishware and trays are loaded in the preferred inclined position. Although cups and glasses may be loaded directly on the conveyor, it is better to wash stem ware in special racks. Silverware and small pieces must be washed in special racks.

Unloading

Lift the pieces off and stack similar pieces together. If a piece is left on the conveyor, it will strike the conveyor safety stop (5, Fig. 1), immediately stopping conveyor. To re-energize, remove object from conveyor allowing fingers to return to operating position and press the conveyor START switch (7, Fig. 1).

CLEANING

After each day's operation, TURN OFF ALL MOTORS AND DISCONNECT POWER SWITCH. Open the drain valves and all inspection doors (1, Fig. 1). When tanks are empty, remove all curtains, strainer pans (6, Fig. 6) and baskets (13, Fig. 1) and empty contents. Use care in removing the strainer pans to avoid spilling contents in the dishwasher tanks.

Wash out interior using a high pressure hose. **NOTE:** For convenience when cleaning, customer should install a water tap under or near the dishwasher and have 30 feet of heavy duty hose with a squeeze valve.

Thoroughly clean strainer pans (6, Fig. 6), baskets and curtains. Replace strainer pans and basket. Allow curtains to air dry prior to reinstallation. Leave inspection doors (1, Fig. 1) open until next day's operation.

MAINTENANCE

WARNING: DISCONNECT ELECTRICAL POWER SUPPLY AND PLACE A TAG, INDICATING CIRCUIT IS BEING WORKED ON, AT FUSED DISCONNECT SWITCH BEFORE PERFORMING ANY MAINTENANCE PROCEDURE.

LUBRICATION

NOTE: Lists of acceptable lubricants are available through authorized Hobart Servicing Offices.

Speed Reducer

Lubricant is replenished as needed. Check monthly by removing the gear case plug (1, Fig. 5). The oil level should be even with the bottom of the plug hole. If oil is below this level, fill from container labeled "This oil for gear case only" (EP-140 supplied).

Conveyor Drive Chain

Inspect chain (2, Fig. 5) regularly and oil as required with "Oildag" (supplied).

Conveyor Sprocket Bearings

Located at both the entrance and discharge ends of machine, they should be lubricated every four months. Alemite fittings (7, Fig. 6), one at each bearing (4), and a grease gun are provided for this operation.

Adjustable Take-Up Gibs

Inspect regularly and lubricate as required with "Gredag #3" (supplied). Also lubricate the adjusting stud threads (5, Fig. 6) with "Oildag" (or equivalent).

ADJUSTMENT

Conveyor Alignment and Tension

The rollers on each side of the conveyor should be centered and run true on the tracks during operation. Proper tension is achieved when the conveyor rollers run on the bottom track freely but will not jam between the track and the sprockets. At the discharge end. As the conveyor runs, a given roller should contact the entrance end upper track at about the "knee" of the incline (1, Fig. 6) in the track.

To adjust, loosen the lock nuts (4, Fig. 6) at the loading end and turn adjusting nuts (3, Fig. 6) at each conveyor take-up.

When adjustment is correct, the sprocket shaft may not be at right angles to the conveyor track. This is not important. The CONVEYOR ROLLERS CENTERED ON THE TRACK IS IMPORTANT. Retighten lock nuts (4, Fig. 6).

Conveyor Slip Clutch

Adjustment should be made so that the conveyor will just pull a full load of dishes through the machine. The adjustment will vary with the length of the machine and the type ware washed. The clutch should slip if more than a normal full load is placed on the conveyor.

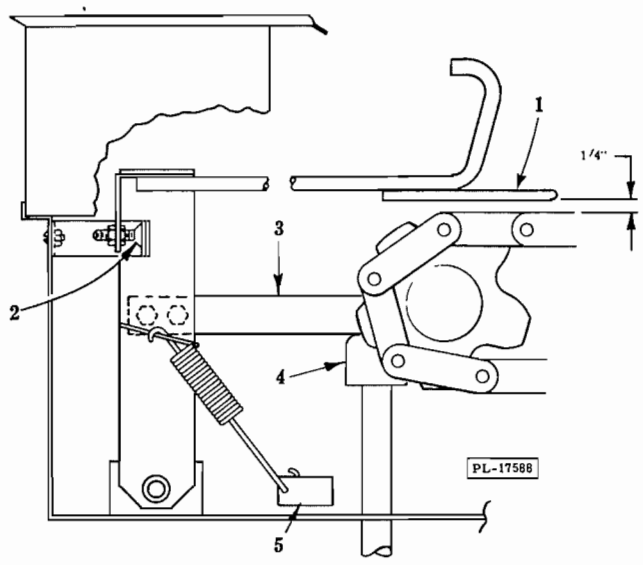

Fig. 10

To adjust, tighten clutch adjustment nut (3, Fig. 5) by hand until tight. Check operation by loading conveyor with customer's ware, manually hold back the fully loaded conveyor by grabbing the flights. The clutch should slip. Additional clutch adjustment may be required to obtain positive clutch operation.

NOTE: New machines require readjustment after serveral days of operation.

Conveyor Drive Chain

Drive chain should never be taut. However, if it is too loose it will rub on the tube chain guard. The correct adjustment is achieved when the chain is just tight enough to pass through the tube and not touch.

To adjust, turn the adjusting nuts (4, Fig. 5) to raise or lower the motor/speed reducer base plate as required.

Conveyor Brake

Approximately 1/4" movement of the safety stop should operate the brake.

To adjust, raise the safety stop assembly fingers (1, Fig. 10) of the safety stop assembly. Loosen the plunger bolt jam nut (1, Fig. 11) and adjust clearance between plunger bolt (2, Fig. 11) and limit switch (3, Fig. 11) to 1/16". Tighten jam nut.

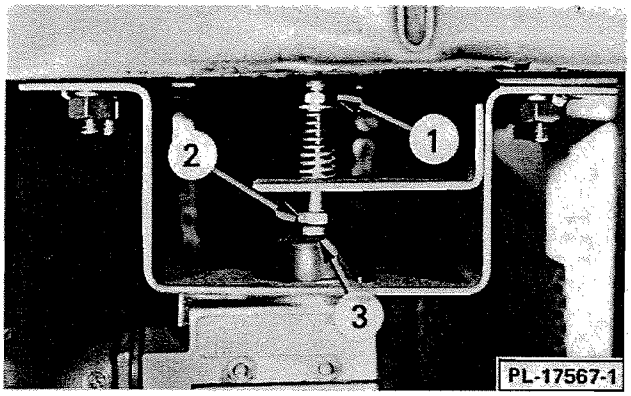

Fig. 11

Loosen the two mounting bolts on the actuator arm (3, Fig. 10) and position the arm 1/4" from its stop (4, Fig. 10). Tighten the bolts.

Loosen the stop plate nuts and adjust the stop plate (2, Fig. 10) so the outside of the safety stop assembly fingers (1, Fig. 10) are centered with and 1/4" above the conveyor rollers.

Hook the conveyor trip springs (2) in the appropiate holes (5, Fig. 10) so that the smallest and lightest dish to be washed will easily trip the safety stop.

Exhaust Vents

The dishwasher must be in operation, at proper temperatures, before an adjustment can be made.

To adjust, loosen the hex nut (2, Fig. 12). Using an open-end wrench on the flatted tongue (1, Fig. 12), open the damper just enough so that only small puffs of vapor are discharged into the room. Lock the damper hex nut. Repeat this procedure for each damper.

Make-Up Water

Since a certain amount of water is lost during normal operation, it is necessary to add regulated amounts.

FT-600 Make-up is controlled by rotating the final rinse arms toward or away from the loading end of machine. In normal operating conditions the upper final rinse arm should angle 10° - 15° toward the loading end and the lower final rinse arm, 5° - 10° toward the loading end.

To adjust, loosen the arm lock nut (upper or lower) and rotate the arm to the desired position. Tighten the lock nut.

FT-700 - Make-up is controlled by a replenishing valve located inside the Power Wash unit (see curtain diagram). The valve should be set to replenish 1.5 to 2 gallons per minute. This equates to a stream of water from the valve about the thickness of a pencil.

To adjust, remove curtains and operate the rinse actuator while the conveyor is running. Inspect the flow of water from the entrance end or discharge end. Stop machine and open or close valve as necessarv.

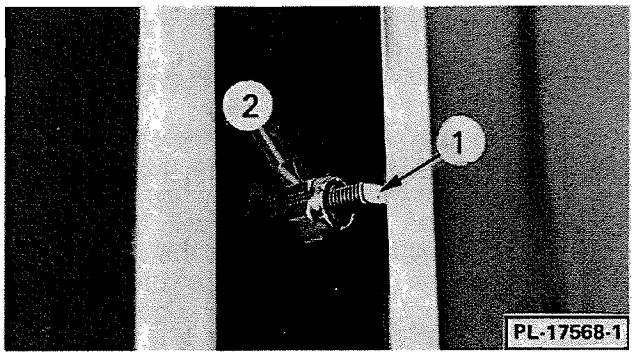

Fig. 12