HOBART

INSTRUCTION MANUAL

... with Replacement Parts

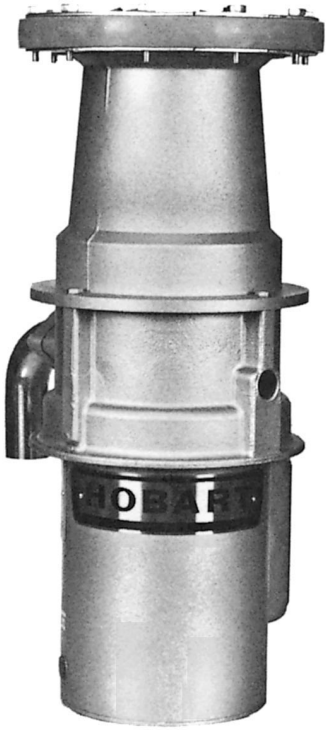

MODELS
FD2-50, FD2-75 & FD2-125
FOOD WASTE DISPOSERS

ML-32437	FD2-50 W/LONG HOUSING
ML-32438	FD2-75 W/LONG HOUSING
ML-32439	FD2-125 W/LONG HOUSING
ML-33333	FD2-50 W/SHORT HOUSING
ML-33335	FD2-75 W/SHORT HOUSING
ML-33337	FD2-125 W/SHORT HOUSING

A product of HOBART CORPORATION TROY, OHIO 45374

FORM 14231 (Rev. B, 10-87)

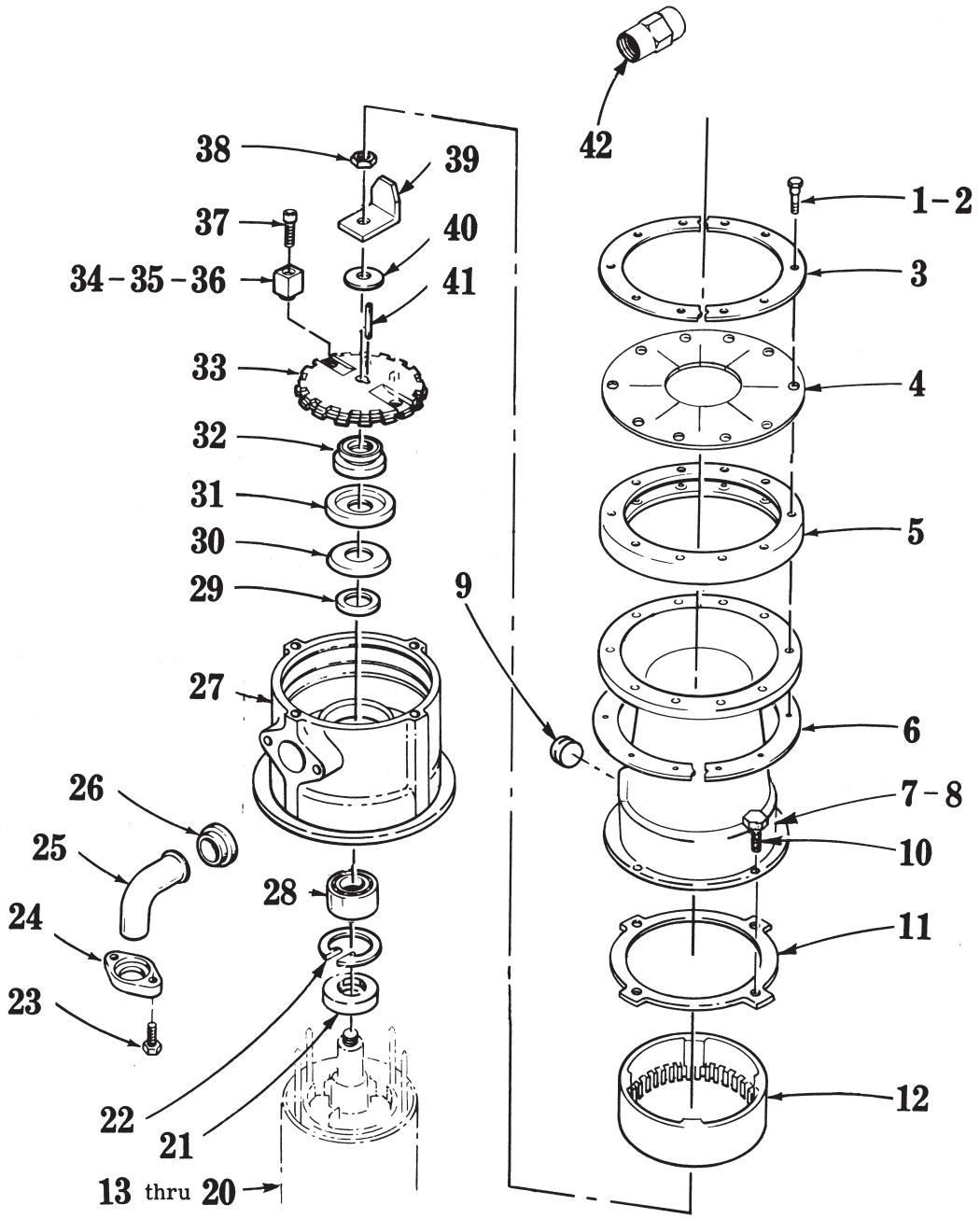

PL-20668

DISPOSER UNIT

DISPOSER UNIT

ILLUS. PL-20668	PART NO.	NAME OF PART[27]	AMT.
1	SC-90-18	Cap Screw ¼-20 × 1⅜ Hex Hd. (Use with item 7)	10
2	SC-62-81	Cap Screw 5/16-18 × ⅞ Hex Hd. (Use with item 8)	3
3	203185	Ring - Top Cone Clamp (Half)	2
4	202105	Guard - Splash (8 1/16 Bolt Circle) (Use with item 7)	1
5	201492	Ring - Isolating	1
6	203191	Ring - Bottom Cone Clamp (Half)	2
7	289015	Housing - Upper (8⅛″ High, 8 1/16″ Bolt Circle, 8 11/16″ O.D. Flange)	1
8	289006	Housing - Upper (5½″ High, 4½″ Bolt Circle, 6⅞″ O.D. Flange)	1
9	FP-66-2	Plug ½ Sq. Hd. Pipe	1
10	SC-36-13	Cap Screw ¼-20 × ¾ Hex Head	4
11	289001	Gasket - Waste	1
12	201227	Ring - Shredder	1
13	294269-2	Motor (115/200-230 V., 60 Hz., 1 Ph.) (FD2-50 & FD2-75)	1
14	294506-2	Motor (110-120/220-240 V., 50 Hz., 1 Ph.) (FD2-50 & FD2-75)	1
15	294270-2	Motor (200-230/460 V., 60 Hz., 3 Ph.) (FD2-50 & FD2-75)	1
16	294507-2	Motor 220-240/380-415 V., 50 Hz., 3 Ph.) (FD2-50 & FD2-75)	1
17	294271-2	Motor (115/200-230 V., 60 Hz., 1 Ph.) (FD2-125)	1
18	294508-2	Motor (110-120/220-240 V., 50 Hz., 1 Ph.) (FD2-125)	1
19	294272-2	Motor (200-230/460 V., 60 Hz., 3 Ph.) (FD2-125)	1
20	294509-2	Motor (220-240/380-415 V., 50 Hz., 3 Ph.) (FD2-125)	1
21	201448	Seal - Oil	1
22	RR-8-15	Ring - Retaining	1
23	SC-62-81	Cap Screw 5/16-18 × ⅞ Hex Hd	2
24	200731	Flange - Spout	1
25	203401	Spout - Waste	1
26	201404	Gasket - Spout	1
27	289008	Housing - Lower	1
28	BB-21-8	Ball Bearing - Hoover #6303	1
29	202717	Spacer - Shaft	1
30	202725	Slinger - Water	1
31	203194	Support - Seal	1
32	117071	Water Seal Assy	1
33	201250-1	Flywheel	1
34	201223-3	Cutter - Flywheel (FD2-50)	2
35	201223-1	Cutter - Flywheel (FD2-75)	2
36	201223-4	Cutter - Flywheel (FD2-125)	2
37	202556-1	Screw	2
38	NS-31-39	Stop Nut ½-20 ''Elastic''	1
39	201235	Cutter - Hi-Bulk	1
40	201484	Seal - Shaft	1
41	203619-2	Key - Shaft	1
42	292119	Flow Control (5 G.P.M.)	1
	289004-3	Upper Housing & Shredder Ring Assy. (Incls. items 1, 3, 4, 5, 6, 7, 9 & 12)	1
	289004-1	Upper Housing & Shredder Ring Assy. (Incls. items 2, 8, 9 & 12)	1
	289036	Seal & Bearing Kit (Incls. items 21, 22, 28, 29, 30, 31, 32, 38 & 40)	1
	292122	Ring - 7″ Scrap	1
	292123	Flange - Sink 7″ ID	1
	ML-33268-Z	Disposer Cover 15″ Cone	1
	ML-33269-Z	18″ Cone Disposer Cover Kit	1

Installation, Operation and Care of MODELS FD2-50, FD2-75 & FD2-125 FOOD WASTE DISPOSERS

SAVE THESE INSTRUCTIONS

GENERAL

The model FD2 disposers utilize hardened steel cutter blocks (1, Fig. 1) mounted to a rotating flywheel (4, Fig. 1) and a stationary shredder ring (2, Fig. 1) to grind food waste to a small particle size for discharge through waste lines. With the motor running and flushing water turned on, food waste is reduced to grinding size by the rotating "hi-bulk" cutter (3, Fig. 1). Grinding occurs as the food waste is forced against the shredder ring by the cutter blocks and the centrifugal force due to rotation. The flushing water aids the grinding action and discharges ground food waste into the waste line.

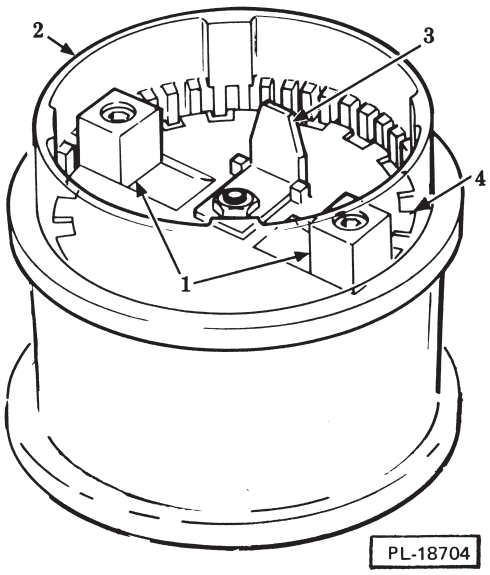

Fig. 1

The disposer features removable hardened steel components, reversible rotation with grinding in both directions, and a manual reset inherent overload protector in the motor circuit. It is self-feeding, making it unnecessary to force the food waste into the grinding mechanism. It may be completely filled with waste when idle, and will start and operate at full load.

Control groups and accessory groups are available to suit each installation.

INSTALLATION

Prior to installation, test the electrical service to assure that it agrees with the specifications on the disposer data plate.

Temporary support, such as blocking, must be provided for the disposer during installation to avoid excessive stress at welded or soldered cone to table connection.

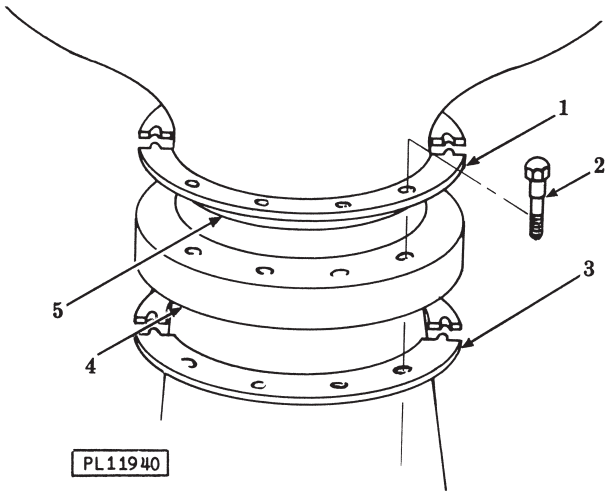

Fig. 2

ASSEMBLY

To attach the disposer assembly to the cone for a regular duty installation, see Fig. 2. Note the top clamp ring (1, Fig. 2) has drilled holes and the bottom clamp ring (3, Fig. 2) has threaded holes. Using five screws (2, Fig. 2) assemble rear halves of clamp rings to the back of the disposer flange (4, Fig. 2). Lift the disposer into position on the cone flange (5, Fig. 2) and assemble front halves of clamp rings using remaining five screws. Tighten all screws finger tight. Rotate disposer to desired position and tighten all screws evenly to form a water-tight joint.

To install accessory group E (sink adapter for 3½″ to 4″ sink opening), use the short upper housing. See (3, Fig. 4) and the accessory group data sheet.

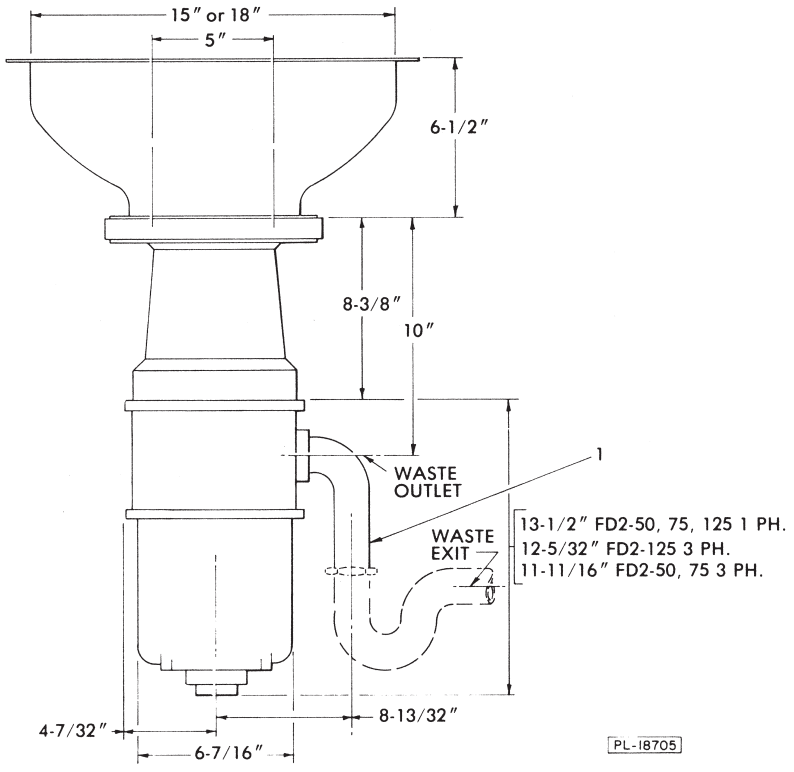

Fig. 3

PLUMBING

WARNING: PLUMBING CONNECTIONS MUST COMPLY WITH APPLICABLE SANITARY, SAFETY, AND PLUMBING CODES.

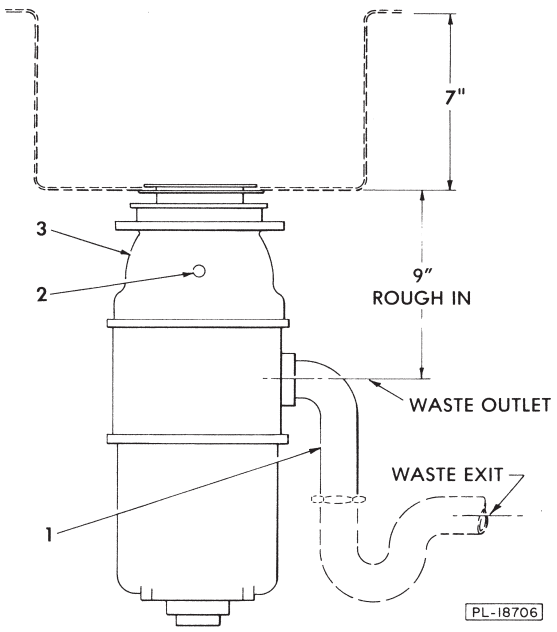

Fig. 4

Drain

The disposer is furnished with a 1½" O.D. waste discharge spout suitable for connection to a standard trap. Install waste lines with the shortest possible run and best fall. The waste exit must not be higher than center line of the water outlet (1, Fig. 3 and 1, Fig. 4). Old waste lines must be thoroughly cleaned. Ream burrs from cut pipe ends and use fittings which will permit unrestricted flow. Drum traps and grease traps must NOT be used.

Water Connections

Connect disposer at 2, Fig. 4 or 1, Fig. 5 from a ¾" i.p.s. cold water supply line. Install the five gallon per minute flow control (2, Fig. 5) supplied with the disposer at 2, Fig. 4 or 1, Fig. 5. If the water line pressure exceeds 60 p.s.i., a pressure reducing valve (6, Fig. 5) (not supplied) should be installed. The minimum flow pressure for the disposer to function properly is 16 p.s.i. Install a shut-off valve (not supplied) for proper servicing of the disposer.

All control groups are supplied with a solenoid valve (4, Fig. 5 or 3, Fig. 6) which must be installed in the water supply line as shown. Control Group 3 is furnished with a pressure switch (5, Fig. 5 or 4, Fig. 6) which must be installed between the solenoid valve and pressure reducing valve. If there is no pressure reducing valve in the water supply line, then install the pressure switch between the solenoid valve and the shut-off valve.

Install a vacuum breaker (3, Fig. 5) according to local plumbing codes. If local plumbing codes prohibit the use of a vacuum breaker, install an air gap water inlet (2, Fig. 6) (not supplied) observing the local codes.

ELECTRICAL CONNECTIONS

WARNING: ELECTRICAL AND GROUNDING CONNECTIONS MUST COMPLY WITH THE APPLICABLE PORTIONS OF THE NATIONAL ELECTRICAL CODE AND/OR OTHER LOCAL ELECTRICAL CODES.

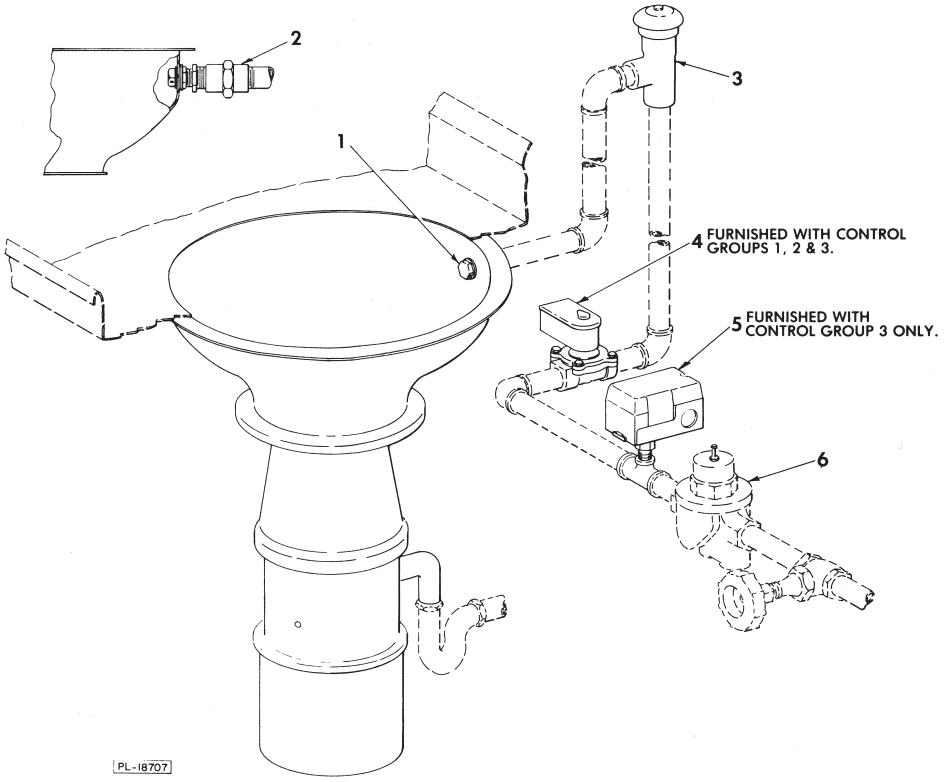

Fig. 5

WARNING: DISCONNECT ELECTRICAL POWER SUPPLY AND PLACE A TAG AT THE DISCONNECT SWITCH INDICATING THAT YOU ARE WORKING ON THE CIRCUIT.

Knockouts are provided in the motor junction box for making electrical connections to the unit. Flexible conduit should be used to permit moving the unit for periodic servicing and maintenance.

Select and follow wiring diagram, furnished with machine, applicable to your disposer and electrical service.

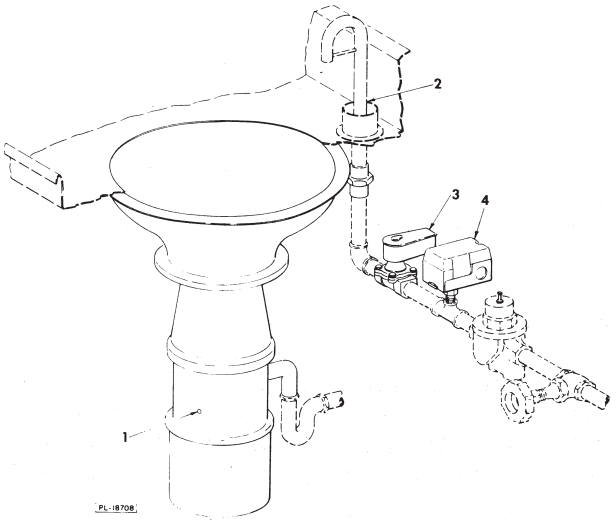

Fig. 6

OPERATION

Before operating disposer make sure it is clear of foreign objects such as metal or wire clippings, screws, nails, etc., which may have dropped into it during installation. Check the flywheel for free rotation.

WARNING: NEVER USE YOUR HAND TO CHECK ROTATION OF FLYWHEEL OR TO REMOVE FOREIGN MATTER FROM THE DISPOSER. USE A STICK OR SIMILAR OBJECT TO TURN THE FLYWHEEL. FOREIGN MATTER CAN BE REMOVED WITH TONGS OR PLIERS.

Start disposer before feeding food waste. Be sure water is flowing. With typical optional controls, water flow and unit starting are simultaneous and automatic. Feed food waste into disposer. Do NOT feed china, metal, rags, clam shells, or similar material into the unit. Do NOT put grease or oil in disposer as drain may become clogged. Always allow the disposer to run for a short period after grinding is completed to assure proper flushing of the disposer and waste line. This flushing is automatically controlled with certain optional controls.

CONTROLS

The operation of the disposer and additional available controls will depend on the selection of control devices. Refer to control group data sheet.

CLEANING

The food waste disposer should be kept in a clean and sanitary condition. Allow the disposer to run a few moments after disposing of all food waste to completely flush out the interior.

If food waste is allowed to accumulate due to improper clean up, it will give off offensive odors. If this happens, cleaning can be accomplished by using a stiff brush with a strong soap and hot water solution. Light cleaning can be accomplished by grinding ice and a lemon through the disposer.

CAUTION: Do not use chemical solvents or other drain cleaning compounds through this disposer.

WARNING: NEVER REACH INSIDE THIS DISPOSER WHILE IT IS OPERATING.

MAINTENANCE

LUBRICATION

No lubrication is required for the food waste disposer unit.

CUTTER BLOCKS

The cutter blocks (1, Fig. 1) may be rotated by a qualified Hobart Service Technician if the cutting edges become worn.

OVERLOAD PROTECTION

The disposer motor is protected by a thermal, resetable circuit breaker and will trip if the motor is overloaded. To reset, allow approximately five minutes for cooling, then press the manual reset button located on the bottom of the motor. An arrow on the side of the motor indicates location of the button. Restart the disposer using normal operating procedure. If circuit breaker continues to trip, contact your local Hobart Service Office.

WATER SEAL VENT

A small weep hole (1, Fig. 6) in the side of the lower housing vents the dry side of the water seal. Water leaking from this weep hole is an indication of water seal leakage. If leaking, the water seal should be replaced. DO NOT plug or put grease in the weep hole.