HOBART

INSTRUCTION MANUAL

... with Replacement Parts

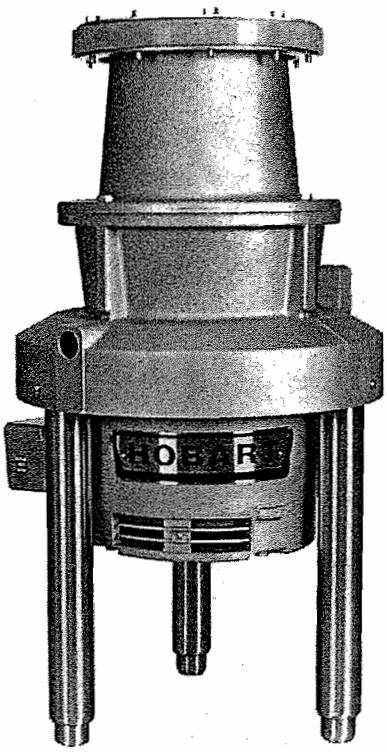

MODELS
FD2-150, FD2-200 & FD2-300
FOOD WASTE DISPOSERS

ML-32440	FD2-150 W/ADJ. LEGS
ML-32441	FD2-200 W/ADJ. LEGS
ML-32442	FD2-300 W/ADJ. LEGS
ML-33346	FD2-150 W/LAG LEGS
ML-33350	FD2-200 W/LAG LEGS
ML-33354	FD2-300 W/LAG LEGS

A product of HOBART CORPORATION TROY, OHIO 45374

FORM 14233 (Rev. B, 11-87)

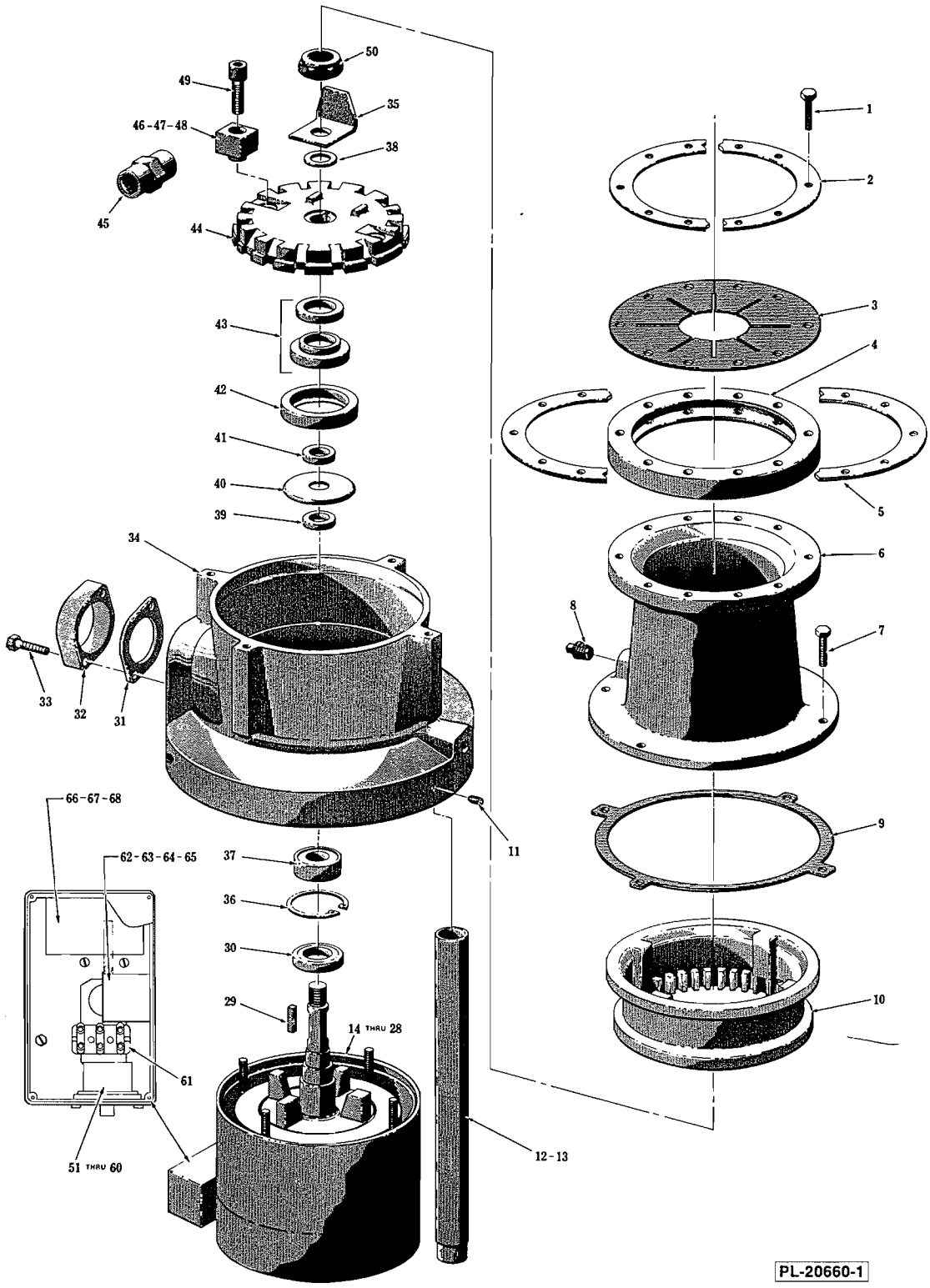

DISPOSER UNIT

DISPOSER UNIT

ILLUS. PL-20660-1	PART NO.	NAME OF PART[27]	AMT.
1	SC-90-18	Cap Screw ¼-20 × 1⅜ Hex Hd	10
2	203185	Ring - Top Cone Clamp (Half)	2
3	202105	Guard - Splash	1
4	201492	Ring - Isolating	1
5	203191	Ring - Bottom Cone Clamp (Half)	2
6	200942-2	Housing - Upper	1
7	SC-41-12	Cap Screw 5/16-18 × ¾ Hex Hd	4
8	FP-66-2	Plug ½ Sq. Hd. Pipe	1
9	289002	Gasket - Waste	1
10	201228	Ring - Shredder	1
11	SC-88-36	Set Screw 5/16-18 × ½ Soc. Hdls., Cup Pt	3
12	288380-1	Leg & Bullet Foot	3
13	289026-1	Leg & Flanged Foot	3
14	294518-5	Motor (200 V., 60 Hz., 1 Ph.) (1½ H.P., FD2-150)	1
15	294518-6	Motor (230 V., 60 Hz., 1 Ph.) (1½ H.P., FD2-150)	1
16	294519-4	Motor (200 V., 60 Hz., 3 Ph.) (1½ H.P., FD2-150)	1
17	294520-4	Motor (230/460 V., 60 Hz., 3 Ph.) (1½ H.P., FD2-150)	1
18	294522-3	Motor (220/240 V., 50 Hz., 1 Ph.) (1½ H.P., FD2-150)	1
19	294521-4	Motor (220-240/380-415 V., 50 Hz., 3 Ph.) (1½ H.P., FD2-150)	1
20	294518-7	Motor (200 V., 60 Hz., 1 Ph.) (2 H.P., FD2-200)	1
21	294518-8	Motor (230 V., 60 Hz., 1 Ph.) (2 H.P., FD2-200)	1
22	294519-5	Motor (200 V., 60 Hz., 3 Ph.) (2 H.P., FD2-200)	1
23	294520-5	Motor (230/460 V., 60 Hz., 3 Ph.) (2 H.P., FD2-200)	1
24	294522-4	Motor (220-240 V., 50 Hz., 1 Ph.) (2 H.P., FD2-200)	1
25	294521-5	Motor (220-240/380-415 V., 50 Hz., 3 Ph.) (2 H.P., FD2-200)	1
26	294519-6	Motor (200 V., 60 Hz., 3 Ph.) (3 H.P., FD2-300)	1
27	294520-6	Motor (230/460 V., 60 Hz., 3 Ph.) (3 H.P., FD2-300)	1
28	294521-6	Motor (220-240/380-415 V., 50 Hz., 3 Ph.) (3 H.P., FD2-300)	1
29	203619-1	Key - Shaft	2
30	288999	Seal - Oil	1
31	201420	Gasket - Spout	1
32	204852	Flange - Outlet	1
33	SC-36-40	Cap Screw 5/16-18 × 1¼ Hex Hd	2
34	289019	Lower Housing	1
35	201234	Cutter - Hi-Bulk	1
36	RR-6-2	Retaining Ring	1
37	BB-17-39	Ball Bearing - MRC 205SZZ	1
38	201485	Seal-Shaft	1
39	289012	Spacer	1
40	202724	Slinger - Water	1
41	289012	Spacer	1
42	203193	Support - Seal	1
43	114144	Water Seal Assy	1
44	201210	Flywheel	1
45	292120	Flow Control (8 G.P.M.)	1
46	201223-3	Cutter - Flywheel (FD2-150)	2
47	201223-1	Cutter - Flywheel (FD2-200)	2
48	201223-4	Cutter - Flywheel (FD2-300)	2
49	202556-2	Screw	2
50	NS-31-43	Stop Nut ¾-16 "Elastic"	1
51	201982-2	Protector 230 V., 60 Hz., 1 Ph. (FD2-150)	1
52	201982-3	Protector 200 V., 60 Hz., 1 Ph. (FD2-150)	1
53	201982-4	Protector 200 V., 60 Hz., 3 Ph. (FD2-150)	1
54	201982-5	Protector 230/460 V., 60 Hz., 3 Ph. (FD2-150)	1
55	201982-6	Protector 230 V., 60 Hz., 1 Ph. (FD2-200)	2
56	201982-7	Protector 200 V., 60 Hz., 1 Ph. (FD2-200)	1
57	201982-8	Protector 230/460 V., 60 Hz., 3 Ph. (FD2-200)	1
58	201982-9	Protector 200 V., 60 Hz., 3 Ph. (FD2-200)	1
59	201982-10	Protector 230/460 V., 60 Hz., 3 Ph. (FD2-300)	1
60	201982-11	Protector 200 V., 60 Hz., 3 Ph. (FD2-300)	1
61	292672-2	Block - Terminal, 3 Ph	1
62	201991-1	Relay 230 V. (FD150 & FD2-200)	1
63	201991-2	Relay 200 V. (FD150 & FD2-200)	1
64	201991-3	Relay 115/230 V. (FD2-150)	1
65	201991-4	Relay 115/230 V. (FD2-200)	1
66	201873-2-1	Capacitor 200/300 V., 60 Hz. (FD2-150 & FD2-200)	1
67	201873-2-2	Capacitor 220-240 V., 50 Hz. (FD2-200)	1
68	201873-2-3	Capacitor 220-240 V., 50 Hz. (FD2-150)	1
	BB-21-4	Ball Bearing (Fafnir P203) (Fan End - Not Shown)	1
	289037	Seal & Bearing Kit (Incls. items 30, 36 thru 43 & 50)	1

Installation, Operation and Care of MODELS FD2-150, FD2-200 & FD2-300 FOOD WASTE DISPOSERS

SAVE THESE INSTRUCTIONS

GENERAL

The disposer features, removable hardened steel components and reversible rotation with grinding in both directions. It is self-feeding, making it unnecessary to force the food waste into the grinding mechanism.

The model FD2 disposers utilize hardened steel cutter blocks (1, Fig. 1) mounted to a rotating flywheel (4, Fig. 1) and a stationary shredder ring (2, Fig. 1) to grind food waste to a small particle size for discharge through waste lines. With the motor running and flushing water turned on, food waste is reduced to grinding size by the rotating "hi-bulk" cutter (3, Fig. 1). Grinding occurs as the food waste is forced against the shredder ring by the cutter blocks and the centrifugal force due to rotation. The flushing water aids the grinding action and discharges ground food waste into the waste line.

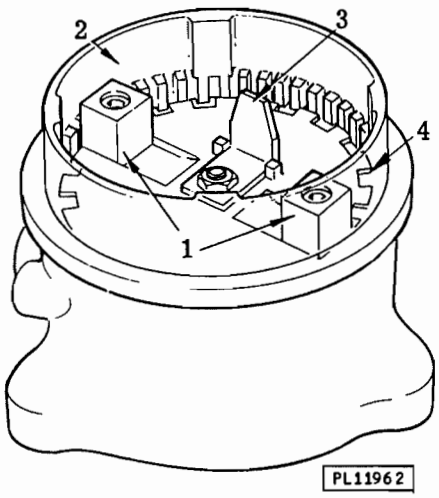

Fig. 1

Control groups and accessory groups are available to suit each installation.

INSTALLATION

Prior to installation, test the electrical service to assure that it agrees with the specifications on the disposer data plate.

Use legs and temporary blocking to support disposer during installation to avoid excessive stress at welded or soldered cone or table connection.

ASSEMBLY

Use the following procedure to attach the disposer assembly to the cone (see Fig. 2 and 4):

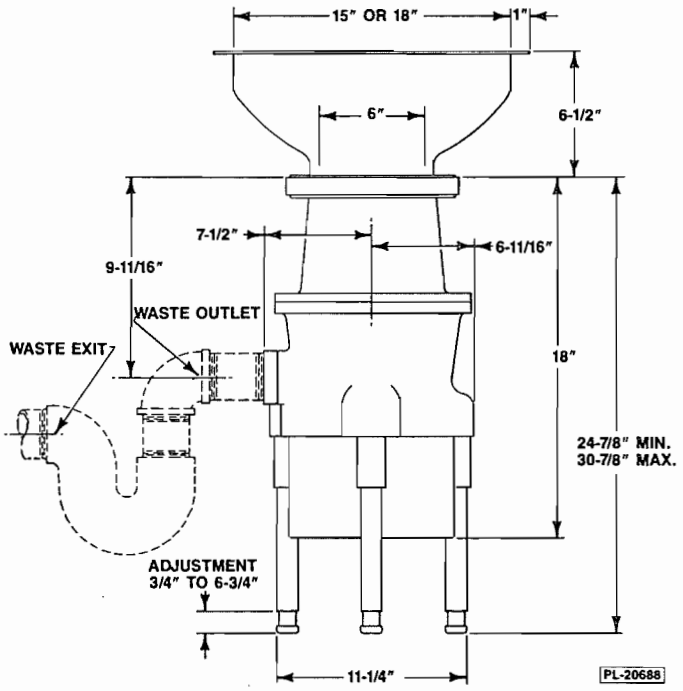

Fig. 2

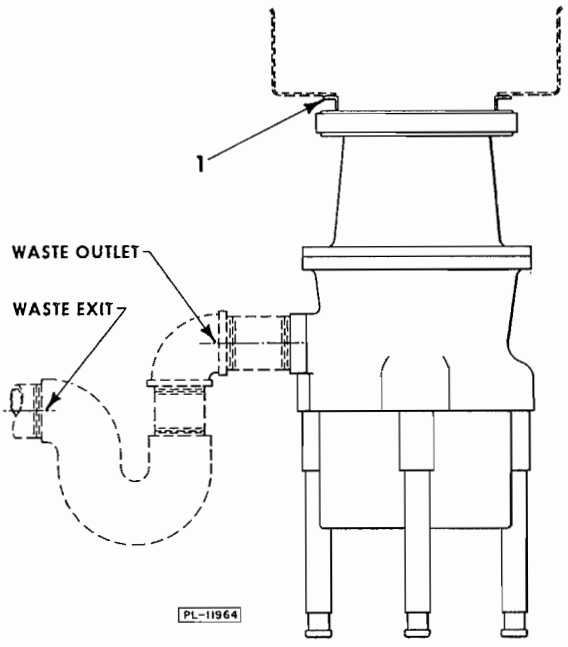

Fig. 3

Raise the disposer into position using the adjustable feet to bring the disposer into firm contact with the cone flange. Do not place the weight of the disposer on the cone.

Turn each adjustable foot as required to complete height and level adjustments.

Assemble the clamp ring halves using the ten screws and tighten screws finger tight. Rotate disposer to the desired position. Tighten the ten screws evenly to form a water right joint.

For an accessory group D installation, use the mounting flange (1, Fig. 3) included with accessory group D. See Fig. 3 and the accessory group data sheet.

PLUMBING

WARNING: PLUMBING CONNECTIONS MUST COMPLY WITH APPLICABLE SANITARY, SAFETY, AND PLUMBING CODES.

Drain

The disposer is furnished with a waste discharge outlet flange (7, Fig. 4) threaded with a standard 2" i.p.s. tapered thread. Install waste lines with the shortest possible run and best fall. If possible, use a fall of ¼" per foot. The waste exit must be lower than the waste outlet (see Fig. 2). The waste lines must be thoroughly cleaned. Ream burrs from cut pipe ends and use fittings which will permit unrestricted flow.

NOTE: Drum traps and grease traps must NOT be used.

Water Connections

Connect disposer at (1, Fig. 4) from a ¾" i.p.s. cold water supply line. Install the eight gallon per minute flow control supplied with the disposer at 2, Fig. 4. If the water line pressure exceeds 60 p.s.i., a pressure reducing valve (6, Fig. 4) (not supplied) should be installed. The minimum flow pressure for the disposer to function properly is 16 p.s.i. Install a shut-off valve (not supplied) for proper servicing of the disposer.

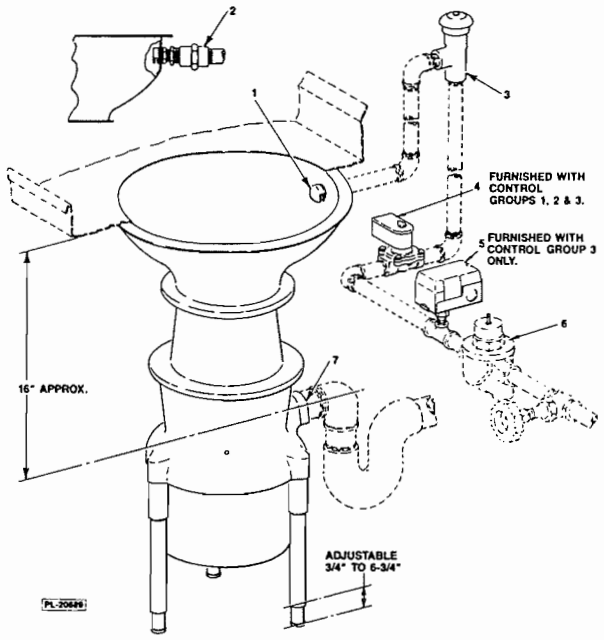

Fig. 4

All control groups are supplied with a solenoid valve (4, Fig. 4 or 3, Fig. 5) which must be installed in the water supply line as shown. Control Group 3 is furnished with a pressure switch (5, Fig. 4 or 4, Fig. 5) which must be installed between the solenoid valve and pressure reducing valve. If there is no pressure reducing valve in the water supply line, then install the pressure switch between the solenoid and the shut-off valve.

Intall a vacuum breaker (3, Fig. 4) according to local plumbing codes. If local plumbing codes prohibit the use of a vacuum breaker, install an air gap water inlet (2, Fig. 5) (not supplied) observing the local codes.

ELECTRICAL CONNECTIONS

WARNING: ELECTRICAL AND GROUNDING CONNECTIONS MUST COMPLY WITH THE APPLICABLE PORTIONS OF THE NATIONAL ELECTRICAL CODE AND/OR OTHER LOCAL ELECTRICAL CODES.

WARNING: DISCONNECT ELECTRICAL POWER SUPPLY AND PLACE A TAG AT THE DISCONNECT SWITCH INDICATING THAT YOU ARE WORKING ON THE CIRCUIT.

Knockouts are provided in the motor junction box for making electrical connections to the unit. Flexible conduit should be used to permit moving the unit for periodic servicing and maintenance.

Select and follow wiring diagram, furnished with machine, applicable to your disposer and electrical service.

OPERATION

Before operating disposer make sure it is clear of foreign objects such as metal or wire clippings, screws, nails, etc., which may have dropped into it during installation. Check the flywheel for free rotation.

WARNING: NEVER USE YOUR HAND TO CHECK ROTATION OF FLYWHEEL OR TO REMOVE FOREIGN MATTER FROM THE DISPOSER. USE A STICK OR SIMILAR OBJECT TO TURN THE FLYWHEEL. FOREIGN MATTER CAN BE REMOVED WITH TONGS OR PLIERS.

Start the disposer before feeding food waste. Be sure water is flowing. With typical optional controls, water flow and unit starting are simultaneous and automatic. Feed food waste into disposer. DO NOT feed china, metal, rags, clam shells or similar material into the unit. DO NOT put grease or oil in the disposer. Oil or grease can clog the drain. Always allow the disposer to run for a short period after grinding is completed to assure proper flushing of the disposer and waste line. This flushing is automatically controlled with certain optional controls.

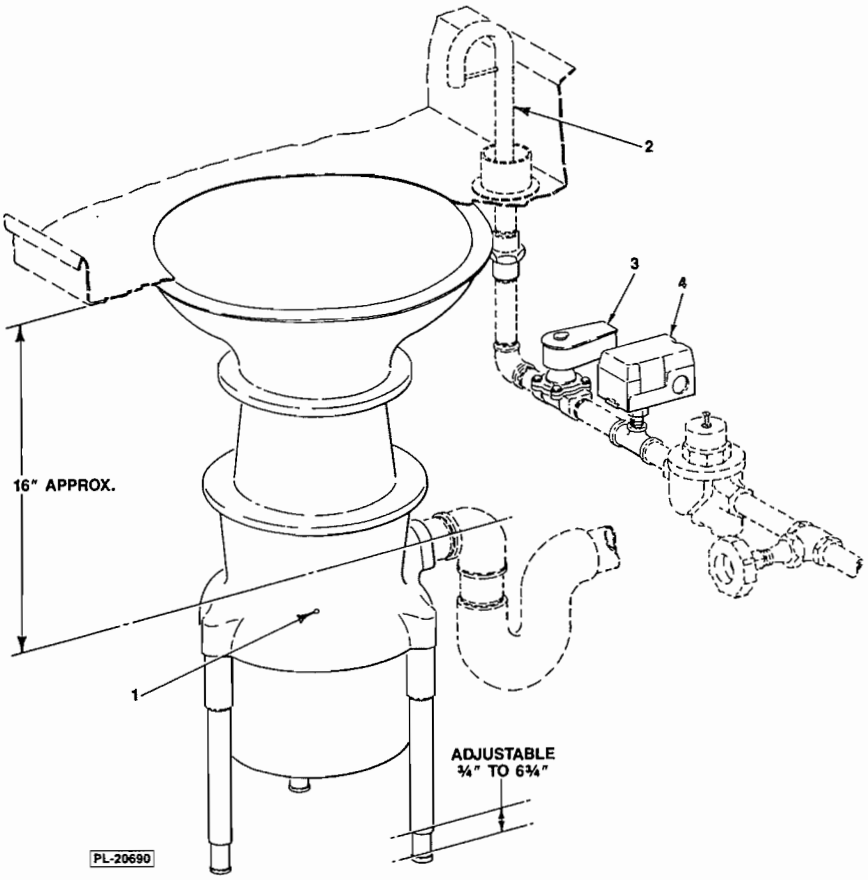

Fig. 5

CONTROLS

The operation of the disposer and additional available controls will depend on the selection of control devices. Refer to control group data sheet.

CLEANING

The food waste disposer should be kept in a clean and sanitary condition. Allow the disposer to run a few moments after disposing of all food waste to completely flush out the interior.

If food waste is allowed to accumulate due to improper clean up, it will give off offensive odors. If this happens, cleaning can be accomplished by using a stiff brush with a strong soap and hot water solution. Light cleaning can be accomplished by grinding ice and a lemon through the disposer.

CAUTION: Do not use chemical solvents or other drain cleaning compounds through the disposer.

WARNING: NEVER REACH INSIDE THIS DISPOSER WHILE IT IS OPERATING.

MAINTENANCE

LUBRICATION

No lubrication is required for the food waste disposer unit. It has grease-packed sealed bearings, requiring no service.

CUTTER BLOCKS

The cutter blocks (1, Fig. 1) may be rotated by a qualified Hobart Service Technician if the cutting edges become worn.

OVERLOAD PROTECTION

The disposer motor is protected by a thermal, resetable overload protector and will trip if the motor is overloaded. To reset, allow approximately five minutes for cooling, then press the manual reset button located on the bottom of the motor junction box. An arrow on the side of the motor junction box indicates location of the button. Restart the disposer using normal operating procedure. If overload protector continues to trip, contact you local Hobart Service Office.

WATER SEAL VENT

A small weep hole (1, Fig. 5) in the side of the lower housing vents the dry side of the water seal. Water leaking from this weep hole is an indication of water seal leakage. If leaking, the water seal should be replaced. DO NOT plug or put grease in the weep hole.