INSTRUCTIONS

MODEL HFB6
ELECTRIC FlashBake® OVEN

MODEL

HFB6 ML-126878
ML-126880

HOBART
CORPORATION
701 S. RIDGE AVENUE
TROY, OHIO 45374-0001
937 332-3000
www.hobartcorp.com

FORM 34485 (May 2000)

TABLE OF CONTENTS

GENERAL 3

INSTALLATION 3

- Unpacking 3
- Location 3
- Installation Codes and Standards 4
- Assembly 4
- Exhaust Duct Installation 4
- Electrical Connection (Hard Wired Ovens) 5
- Electrical Connection (Cord Connected Ovens) 5
- Start-up Testing 6
- Lamp Test 6
- Voltage Test 6

OPERATION 7

- Precautions 7
- Utensils to Use 7
- Cooking Hints 7
- Controls — Model HFB6 8
- To Start Cooking 9
- Choosing a Power Level 9
- Choosing a Cook Time 9
- To Save a Recipe 9
- Password Protection for Presets 10
- Stopping or Pausing a Recipe 10
- Blower 10
- Cleaning 11
- Approved Cleaning Materials and Procedures 11
- Cleaners 11
- Cleaning Tools 11
- Removing and Installing the Top Lamp Shield 13

MAINTENANCE 14

- Inspecting the Oven 14
- Fuses 14
- Circuit Protectors 14
- Lamp Replacement 14

TROUBLESHOOTING 15

- Error Messages 16
- Service 16

© HOBART CORPORATION, 2000

Installation, Operation, and Care of MODEL HFB6 ELECTRIC *Flash*Bake® OVEN

SAVE THESE INSTRUCTIONS

GENERAL

Your Hobart *Flash*Bake oven is a versatile oven that employs a revolutionary high quality, high-speed cooking technology. The baking process is so fast that food retains its natural juices. Bread products brown and become crisp while vegetables retain their color and texture.

*Flash*Bake ovens use visible and infrared light energy to cook by radiative heat transfer. The infrared energy browns the surface of the food, while the visible light energy penetrates and heats it internally. Using the proper combination of visible and infrared light energy, the *Flash*Bake oven provides efficient, high-speed baking and high quality food.

The HFB6 *Flash*Bake oven may be ordered with a 6 foot (1829 mm) power cord for receptacle installation, or with a junction box for direct line connection.

INSTALLATION

Before installing, verify that the electrical service agrees with the specifications on the rating plate located on the rear of the oven. If the supply and specifications do not agree, do not proceed with the installation. Contact your dealer or your local Hobart-authorized service office immediately.

UNPACKING

Immediately after unpacking, check for possible shipping damage. If the oven is found to be damaged, save the packaging material and contact the carrier within 15 days of delivery.

Check to make sure you have the following items:

1. Oven (1)
2. 16" (406.5 mm) stainless steel grill (1)
3. Upper lamp shield (1)
4. Instructions Manual (1)
5. Cooking guide (1)
6. Lamp shield scraper (1)
7. Menu cards (3)

LOCATION

When deciding oven placement, be sure to consider clearance and available air for oven cooling. If the inlet air is obstructed or heated, the oven will not operate properly.

Install the oven on a level countertop.

There must be a 3" (76 mm) minimum clearance on each side of the oven. The area behind the oven around the blower must be kept clear of obstructions and allow free air circulation.

Make sure the cord can be plugged into the appropriate outlet.

INSTALLATION CODES AND STANDARDS

The HFB6 *Flash*Bake oven must be installed in accordance with:

In the United States of America:

1. State and local codes.
2. National Electrical Code, ANSI/NFPA-70 (latest edition). Copies may be obtained from The National Fire Protection Association, Batterymarch Park, Quincy, MA 02269.

In Canada:

1. Local codes.
2. Canadian Electrical Code, Part 2, CSA Standard C22.1 (latest edition). Copies may be obtained from The Canadian Standard Association, 178 Rexdale Blvd., Rexdale, Ontario, Canada M9W 1R3.

ASSEMBLY

Install the upper lamp shield into the oven cavity. Be sure the shield is pushed all the way back and is lying flat in the channels. Refer to REMOVING AND INSTALLING THE TOP LAMP SHIELD, page 13.

Place the grill on the rollers.

EXHAUST DUCT INSTALLATION

A length of flexible exhaust duct may be attached to the oven to vent hot air out of the area. Attach the duct to the blower assembly (Fig. 1).

The other end of the duct can be vented into an existing hood, or to the outside in a manner consistent with local building codes.

The exhaust duct must not be less than 4" (10.1 cm) diameter, and a recommended maximum length of 6 feet (182.9 cm). The duct should be made of metal, suitable for high temperature use. Be sure there are no bends in the duct that will restrict air flow.

A duct longer than 6 feet (182.9 cm) may require a supplementary exhaust system to ensure adequate air flow. The exhaust system must support 135 cfm.

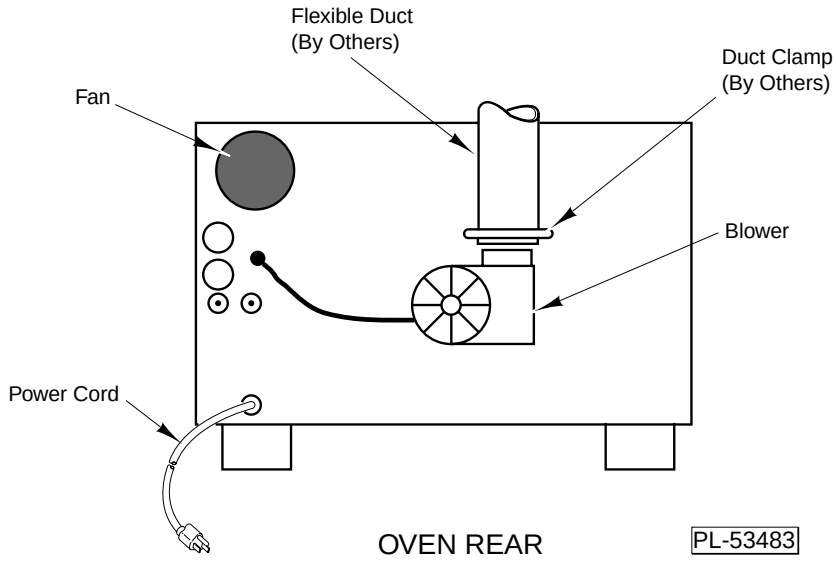

Fig. 1

ELECTRICAL CONNECTION — (Hard Wired Ovens)

WARNING: ELECTRICAL AND GROUNDING CONNECTIONS MUST COMPLY WITH THE APPLICABLE PORTIONS OF THE NATIONAL ELECTRICAL CODE AND/OR OTHER LOCAL ELECTRICAL CODES.

WARNING: DISCONNECT THE ELECTRICAL POWER SUPPLY AND PLACE A TAG AT THE DISCONNECT SWITCH TO INDICATE YOU ARE WORKING ON THE CIRCUIT.

A qualified electrician must wire the oven into a properly-rated dedicated circuit.

Measure the incoming power supply with a volt ohmmeter. The supply **MUST** measure 197 volts with no load as a minimum.

ELECTRICAL CONNECTION — (Cord Connected Ovens)

WARNING: APPLIANCES EQUIPPED WITH A FLEXIBLE ELECTRIC SUPPLY CORD ARE PROVIDED WITH A THREE-PRONG GROUNDING PLUG. THE PLUG MUST BE CONNECTED TO A PROPERLY GROUNDED THREE-PRONG RECEPTACLE. IF THE RECEPTACLE IS NOT THE PROPER GROUNDING TYPE, CONTACT AN ELECTRICIAN. DO NOT REMOVE THE GROUNDING PRONG FROM THE PLUG.

Plug the oven into a dedicated circuit outlet of the appropriate NEMA style and rating. The plug and cord supplied is suitable for 208 or 240 volt operation.

Measure the incoming power supply with a volt ohmmeter. The supply **MUST** measure 197 volts with no load as a minimum.

ELECTRICAL DATA

Model	Volts / Hertz / Phase	Minimum Circuit Ampacity Maximum Protective Device AMPS	Receptacle	Plug
HFB6 Cord Equipped	208 – 240 / 60 / 1	30	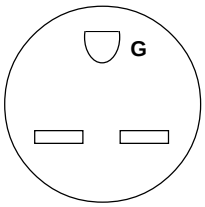 6–30R	6–30P
HFB6 Hard Wire Installation	208 – 240 / 60 / 1	30		

Compiled in accordance with the National Electrical Code, NFPA 70, latest edition.

START-UP TESTING

After the oven is connected to the supply circuit, perform the following tests to ensure that the oven is operating properly.

Lamp Test

Turn the oven on by pressing the ON/OFF button. After a few seconds, the display will settle on Recipe 1. At this point, hold down the **1** button and push the **8** button at the same time. The display at right appears:

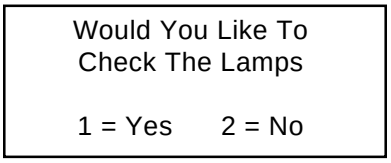

Press the **1** button to begin the lamp test. The door will lock and the lamps will each turn on briefly. After each of the four lamps are turned on successfully, the display will report Lamp OK. When all lamps pass, the oven will automatically return to the normal operating mode.

If a lamp does not operate properly, the test will stop and the display will show the number of the lamp that failed. The display at right is an example:

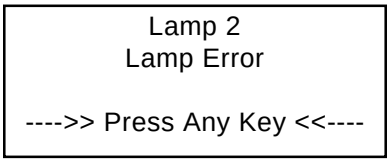

Press any key to continue the test. At the end of the test, the display will show “Lamp Check Finished.” If a lamp was reported as an error, retest and verify visually that the lamp did or did not light.

If either of the two light sensors failed to operate during the test, you will see the message at right at the end of the test:

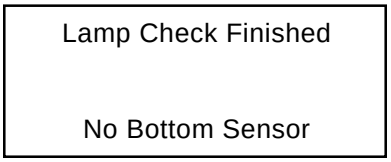

If either a lamp or a sensor are reported as a problem, call your local Hobart-authorized service office.

Voltage Test

After performing the lamp test, the display will return to Recipe 1. On a new oven, the display will say Empty Recipe.

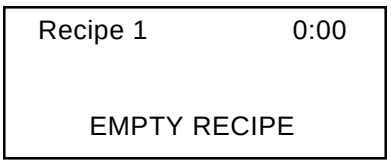

Press the green START button. The door will lock, the blower will start, and a few seconds later the cycle will end and the door will unlock. Now hold down the **1** button and push the **7** button at the same time. The display reports the system voltage.

The voltage reported on this screen must match the nominal system voltage supplied to the oven, either 208 Volts or 240 Volts. Call your local Vulcan-authorized service office if it does not match.

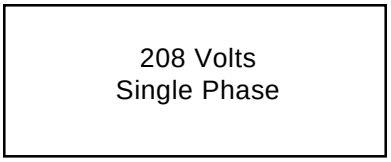

OPERATION

WARNING: THE OVEN AND ITS PARTS ARE HOT. USE CARE WHEN OPERATING, CLEANING, OR SERVICING THE OVEN.

PRECAUTIONS

- Never attempt to open the oven door while a cook cycle is in progress. Never attempt to operate the oven with the door open.
- Do not operate the oven without the grill, or with missing or damaged lamp shields.
- Never operate the oven without food inside.
- Before removing a pan from the oven, prepare a place to put the hot pan. Do not place the hot pan on wood, plastic, Formica, or other burnable surfaces.
- When removing pans from the oven, use a pan grabber and hot pads designed to withstand high temperatures.

UTENSILS TO USE

We recommend using FlashWare (9" and 12" Pyroceram), Metal, Aluminum and Silverstone pans.

Approved		Never Use	
FlashWare (Pyroceram)	Steel	Paper	Stoneware
Silverstone coated aluminum	Ceramic	Boil-In Bag Pouches	Roasting Bags
Corelle Dishes	Aluminum	Plastic	

COOKING HINTS

Experiment. Try various combinations of time and power levels until each of your recipes results in a perfectly cooked product. Some rules of thumb:

- Generally, try to cook as quickly as possible. Cooking for longer periods of time at lower intensities may reduce the quality of the food.
- Consistent preparation and storage of foods to be cooked in the oven will result in consistent cooking results. If oven settings are developed for a pizza using refrigerated and portioned ingredients, then this is how the pizza should be prepared every time or the results will vary.
- Cooking times should *decrease* if foods are room temperature instead of refrigerated, foods are more dry and porous, foods are flat or thin, uniform size pieces are cooked, or black cooking pans are used.
- Cooking times should *increase* when foods are thick and/or dense, foods are frozen, the number of food items in a portion is increased, and foods have high moisture content.
- Keep the lamp shields and interior cavity clean. Baked-on grease and food particles will reduce the efficiency of the oven and affect the cooking process. See the CLEANING section of this manual.
- For best results when experimenting with a new product or recipe, try to start each test cook cycle from a cool oven.

CONTROLS — Model HFB6

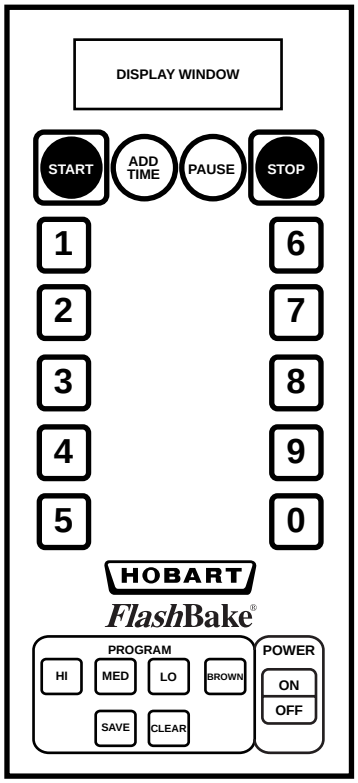

PL-53506

DISPLAY — The display screen, located at the top of the control panel provides a constant indication of the oven status. It is also used for programming the oven and for the display of information and diagnostic messages.

START — Press this button to begin cooking with the programmed recipe that is currently displayed. After this button is pressed, the door will lock, the blower will start, and the oven will start cooking.

ADD TIME — Press this button after the cook cycle has completed if additional cooking is desired. An additional 20 seconds of cooking is done using the power settings from the final step of the last recipe used.

PAUSE — Press this button while the oven is cooking to pause the current cook cycle and unlock the door. Press the START button to resume cooking at the point the recipe was interrupted.

STOP — Press this button while the oven is cooking or paused to stop the cook cycle.

1 Thru 0 — Each of these buttons can have a recipe assigned to it. Press one of these buttons to display that recipe.

HI — This mode uses maximum power, applied from both the top and bottom of the oven for the duration of the cook cycle. It is best suited for cooking appetizers, meats, par-baked pizzas and fresh dough.

MED — This mode begins to decrease the amount of energy applied from the top and bottom of the oven as the cook cycle progresses. It is best suited for baking cookies.

LO — This mode significantly reduces the amount of energy applied to the top and bottom of the oven. It is best suited for bread products, and most frozen products.

BROWN — This mode applies maximum power from the top of the oven only. It is best suited for toasting bagels and sandwiches, melting cheese and browning the top of foods.

SAVE — Pressing this key will save the current cook mode and time in one of the nine preset locations. The display will prompt you to select one of the nine presets.

CLEAR — Pressing this key will clear any numeric entry field. Pressing it again will return the display to the standby or ready mode.

ON – OFF — Turns the control On or Off.

TO START COOKING

You can start cooking immediately by choosing a cook mode, a length of time and pressing the START button. Press one of the four cook mode buttons (HI, MED, LO, or BROWN). Then enter the desired cook time in minutes and seconds(up to 99:99 max.) using the number buttons. Press START and the cook cycle will begin. The oven automatically adjusts the top and bottom power ratios to provide optimum performance. During a cook cycle, it is normal to see the lamps turn on and off at various times. A lower power setting will result in more lamp "off time". Also, a very hot oven will result in more lamp "off time", especially at the lower power settings.

CHOOSING A POWER LEVEL

Use the table below to determine the suggested power level for the following types of food. Experiment with the times and power levels to find the desired settings for your products.

HI	MED	LO	BROWN
Most frozen appetizers/finger foods Meats Seafood Fresh Dough Pizza Par-baked Dough	Cookies Brownies Breads	Biscuits Muffins Bread Sticks Cheese Sticks Cinnamon Rolls Frozen Pizza/Pastries Lasagna (reheating)	Bagels Sandwiches Melting Cheese Top Browning

CHOOSING A COOK TIME

Most items cooked in the *Flash*Bake oven will cook in approximately one half to three-quarters of the time recommended for a conventional oven. Check the food after cooking for half the recommended time. Add time, if necessary, to obtain the desired cooking results.

TO SAVE A RECIPE (Presets)

Once you have determined the appropriate settings for a food item, you can store those settings in any one of the 20 preset locations. After selecting the desired settings, simply press the SAVE button. The display will prompt you to elect one of the 20 available storage locations, using the number buttons. Follow the prompts to confirm your choice and to save your settings.

To start a saved recipe using the presets, simply press the number of the preset, verify that the display shows the desired setting, and press the START button.

PASSWORD PROTECTION FOR PRESETS

This oven comes with an optional password protection to prevent accidental changes to the settings stored in the nine preset locations.

To Enter a Password

1. Press and hold down the “1” button and press the “6” button simultaneously.
2. At the prompting of the display, enter a four digit password.
3. Follow the instructions on the display to either save or disable the password.
   - Be sure to save the password, even if you want to disable it.
   - If a password has already been enabled, you must enter the current password before it will allow you to change or disable the password.

If You Forget Your Password

1. Turn the oven “OFF”.
2. Hold down the STOP button as you press the ON/OFF button to turn the oven on.
3. Release the STOP button. The display will briefly show the current password.

STOPPING OR PAUSING A RECIPE

To stop a cook cycle, press the **STOP** button. The door will unlock and the product can be removed. Use caution as the product and the oven will be extremely hot.

To pause a cook cycle, press the **PAUSE** button. The door will unlock and the product can be examined. If more cooking is desired, close the door and press **START** and cooking will continue from the point at which it was paused. If no more cooking is needed, press the **STOP** button and the cooking cycle will be ended.

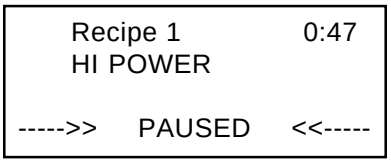

After a cook cycle ends, the oven will beep every few seconds until the door is opened or a button is pressed. This is to remind the operator that the food is still in the oven.

Extending the Cook Time

To extend the cook time, press the **ADD TIME** button after the cook cycle has completed. The oven will cook for an additional 20 seconds at the last recipe's ending intensities. You can stop the extended cook cycle at any time by pressing the **STOP** or **PAUSE** buttons.

An asterisk (*) appears next to the recipe number in the display indicating that it is cooking in an extended mode. The TIME value is set to 20 seconds and it begins counting down as usual.

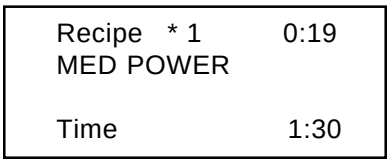

BLOWER

The oven blower turns off automatically after approximately 4 minutes of nonuse, adding to the oven's energy efficiency.

CLEANING

WARNING: DISCONNECT ELECTRICAL SUPPLY BEFORE CLEANING THE OVEN.

WARNING: THE OVEN AND ITS PARTS ARE HOT. USE CARE WHEN OPERATING, CLEANING, OR SERVICING THE OVEN.

The interior cleanliness of the *Flash*Bake oven is essential to ensure maximum efficiency of your oven. Keeping the oven clean and free of food debris will minimize the possibility of smoke and odors from food stuck on the lamp shields and interior walls.

The interior of the oven cavity is lined with highly reflective materials that allow the oven to cook with exceptional speed. These materials **MAY NOT**, under any circumstances, be cleaned with abrasive materials or chemicals that are not recommended for aluminum. If the non-recommended type chemicals are used, they can etch and scratch the cavity, causing a loss in efficiency and result in the need for repairs.

APPROVED CLEANING MATERIALS AND PROCEDURES

Cleaners

- Mild dish soap - Use any mild food service type dish soap for the interior cleaning. Be sure that the soap is non-caustic.
- Citrus 2000 Multi-Purpose Ready To Use
- Pro Formula 409/Pro Formula 409 Degreaser - Use for interior walls.
- Windex Powerized Formula - Use for cleaning the door window interior and exterior.
- Norcross Bar-Be-Que and Grill Cleaner - Use this to clean the stainless steel grill. **Only clean the grill outside of the oven.**
- FDA food quality sanitizer for cooking surfaces.

Cleaning Tools

- Terry towel cloth - Food service quality.
- Nonabrasive pad - Institutional quality-certified nonabrasive. (Example: White 3-M).
- Small wire brush - Used to clean the rollers on the grill assembly only.
- *Flash*Bake lamp shield scraper.

Always rinse cleaned surfaces to ensure all the soap and chemicals have been removed, then wipe dry with a soft clean cloth.

It is recommended that you clean the oven after each shift. If your operation is extremely busy, it may be necessary to wipe out the oven during a shift until you are able to perform the detailed cleaning.

1. Allow oven to cool before starting the cleaning process.
2. Lift the door to the UP position.
3. Remove the grill and set aside. Clean the stainless steel grill with a non-caustic grill cleaner, using a small wire brush. The grill **MUST** be cleaned only when it is out of the oven.

4. To start the interior cleaning, use a cloth dampened with one of the recommended cleaners. Be sure that the soap is non-caustic. Wipe the food debris out of the oven, working from the back forward. **Do not pour cleaning liquids into the oven. Always use a cloth dampened with the cleaning fluids.**

5. Using a *Flash*Bake lamp shield scraper, scrape the lower lamp shield to loosen all residual food. Repeat step 4 by wiping the cavity out, working from the back forward.

6. Remove the upper lamp shield and clean as recommended in REMOVING AND INSTALLING THE TOP LAMP SHIELD, page 13.

7. Dampen a clean cloth with one of the recommended cleaners and wipe out the interior wall surfaces to remove any grease or spatters. Work from the back of the oven forward. Repeat this step several times if necessary.

8. Next, use a small wire brush to clean the drive rollers. Make sure you remove any buildup so the rollers spin freely. After brushing, clean the rollers with a mild soap and water solution. Rinse thoroughly and dry with a soft clean cloth. Test the rollers by spinning them. The drive roller on the right side in the center of the oven cavity will not spin by hand.

9. Clean the interior surface of the front door with a terry cloth towel and recommended cleaner. Wipe the exterior edges of the door and frame, paying close attention to the gasket.

10. Clean the inside of the oven door window with a cloth dampened with window cleaner. If necessary, use a nylon scouring pad to remove baked on grease. Wipe the window clean with a cloth or paper towel dampened with window cleaner. **CAUTION: Do not use abrasives on the reflective inside door surface.**

11. With a clean cloth dampened with a food quality sanitizer, wipe the entire interior cavity of the oven, working from the back forward.

12. Clean the exterior of the oven with a soft cloth dampened **sparingly** with a commercial stainless steel cleaner. The outside of the oven door window may be cleaned with a cloth dampened with window cleaner.

13. NEVER touch the cooking lamps. If contact does occur, gently wipe the lamps with a clean, lint-free cloth dampened with rubbing alcohol.

REMOVING AND INSTALLING THE TOP LAMP SHIELD

Turn the oven off before removing the lamp shield.

The lamp shields **MUST** be kept clean to ensure maximum efficiency of the oven. If the lamp shields are dirty, foods may not cook as quickly or as thoroughly as specified in the programmed recipes. The lamp shields should be cleaned any time food or grease begins to build up on the shield surface. Keeping the shields clean will prevent residue from baking on the shields and burning.

The upper lamp shield is easily removed with the door open. Lift the front edge of the lamp shield over the retaining feature (Fig. 2) and pull it toward you.

To reinstall the lamp shield, place it on its rails and **gently** push it into the oven until it stops. Be sure the lamp shield is properly seated behind the retaining feature.

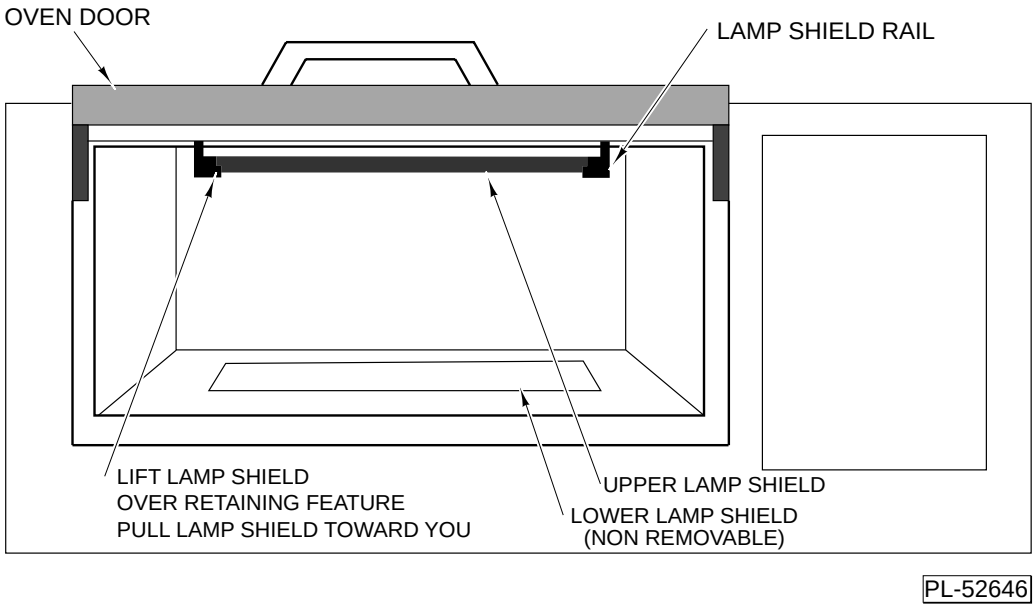

Fig. 2

It is recommended that you obtain spare lamp shields so that dirty ones can be replaced quickly. Dirty shields can then be cleaned during off-peak times.

The lamp shield is made of a special transparent material with specific properties. Replace shield only with official *Flash*Bake oven replacements.

MAINTENANCE

WARNING: THE OVEN AND ITS PARTS ARE HOT. USE CARE WHEN OPERATING, CLEANING AND SERVICING THE OVEN.

WARNING: DISCONNECT THE ELECTRICAL SUPPLY BEFORE PERFORMING ANY MAINTENANCE ON THE OVEN.

Do not remove the oven covers or attempt to open the control cabinet. Doing so will void the warranty. There are no user serviceable parts inside.

INSPECTING THE OVEN

At least once each day, when the oven is cool, visually inspect the inside of the oven. Make sure both lamp shields are in place, clean, and unbroken. Make sure there are no obvious signs of damaged, worn, or broken parts.

FUSES

There are two replaceable fuses located on the back of the oven (Fig. 3). Replace these fuses only with Class CC 3 Amp Fuses.

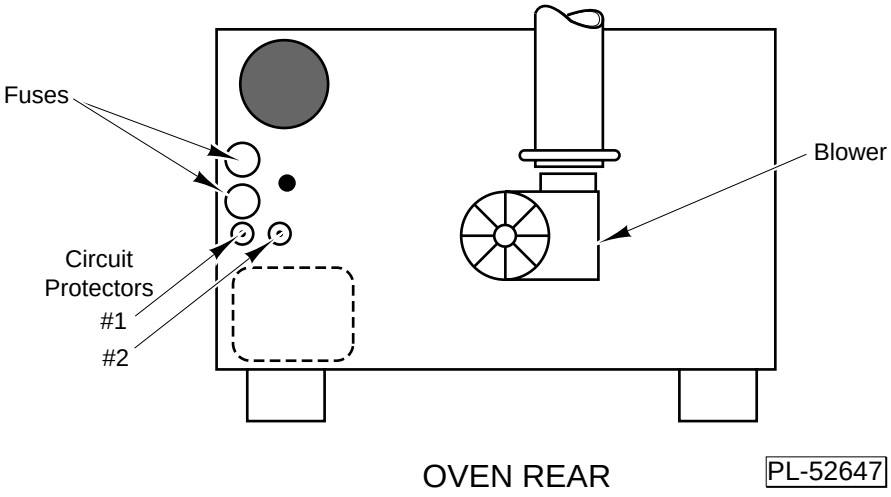

Fig. 3

CIRCUIT PROTECTORS

There are two resettable circuit protectors located on the back of the oven (Fig. 6). A tripped protector is indicated by the reset button sticking out. To reset the protector, press the button.

LAMP REPLACEMENT

All lamps MUST be replaced by your local Hobart service representative.

TROUBLESHOOTING

PROBLEM	POSSIBLE CAUSES
No power to the oven.	1. Oven power cord is not plugged into the wall outlet. 2. Main branch circuit breaker is blown.
No power to the oven controls or display.	1. Tripped circuit protector. Reset by pushing the button. 2. Blown fuse(s). Replace with Class CC 3 Amp fuses only.
Blower not operating.	1. Obstruction in the blower air flow path. Initiate a cook cycle and check for foreign objects in the blower air flow path. 2. Blown fuse(s). Replace with Class CC 3 Amp fuses only.
Oven not cooking.	1. Check the recipe settings. Make sure the settings are valid. Be sure time setting is not zero.
Display screen does not light up.	1. Circuit Protector #1 located at rear of oven (see Fig. 3) has blown. Press reset button.
Grill does not rotate.	1. Circuit Protector #2 (see Fig. 3) has blown. Press reset button.
Door does not lock.	1. Circuit Protector #2 (see Fig. 3) has blown. Press reset button.
No "High Power".	1. Circuit Protector #2 (see Fig. 3) has blown. Press reset button.

ERROR MESSAGES

Under certain conditions, the oven will emit a short trill tone alarm when the operator presses a button. This indicates that something is preventing the oven from operating properly. Check the display screen for the following messages:

MESSAGE	SUGGESTED ACTION
HIGH POWER IS NOT ON --> Press ANY key <--	1. Press any button to clear the message. 2. Restart the cook cycle.
[16] DOOR IS OPEN	Door detected open after cook cycle started. 1. Check for obstructions that may be keeping the door from closing properly. 2. Restart the cook cycle.
DOOR IS NOT CLOSED	Door detected open at start of cook cycle. 1. Check for obstructions that may be keeping the door from closing properly. 2. Restart the cook cycle.
[18] OVEN OVERHEATED ALLOW TO COOL	1. Press any button to clear the message. 2. Make sure the blower is on. 3. Check vent/duct for obstructions. 4. Close door, wait for the oven to cool. 5. Restart the cook cycle.
[15] LAMPS ARE ON *! H.V. IS TURNED OFF	An irregular lamp condition was detected. 1. Turn the oven off. 2. Turn the oven on. 3. Restart the cook cycle.
[19] UPPER LAMP SHIELD OUT OF PLACE	1. Check that the upper lamp shield is properly installed. 2. Restart the cook cycle.

SERVICE

If these actions do not reset the oven and allow the cooking cycle to begin, contact your local Hobart authorized service office.