CATALOG OF REPLACEMENT PARTS

Food Processors FP400 (ML'S 104751 & 134183)

A product of HOBART 701 S. RIDGE AVENUE TROY, OHIO 45374-0001

FORM 43012 Rev. C (July 2024)

 © HOBART 2024

Table of Contents

5 HOUSING UNIT
7 MOTOR AND GEARING
9 MANUAL PUSH FEED ASSEMBLY
11 FEED CYLINDER ASSEMBLIES
13 ACCESSORIES
17 FEED HOPPER ASSEMBLY
19 TUBE FEED ASSEMBLY
21 ELECTRICAL BOX ASSEMBLY

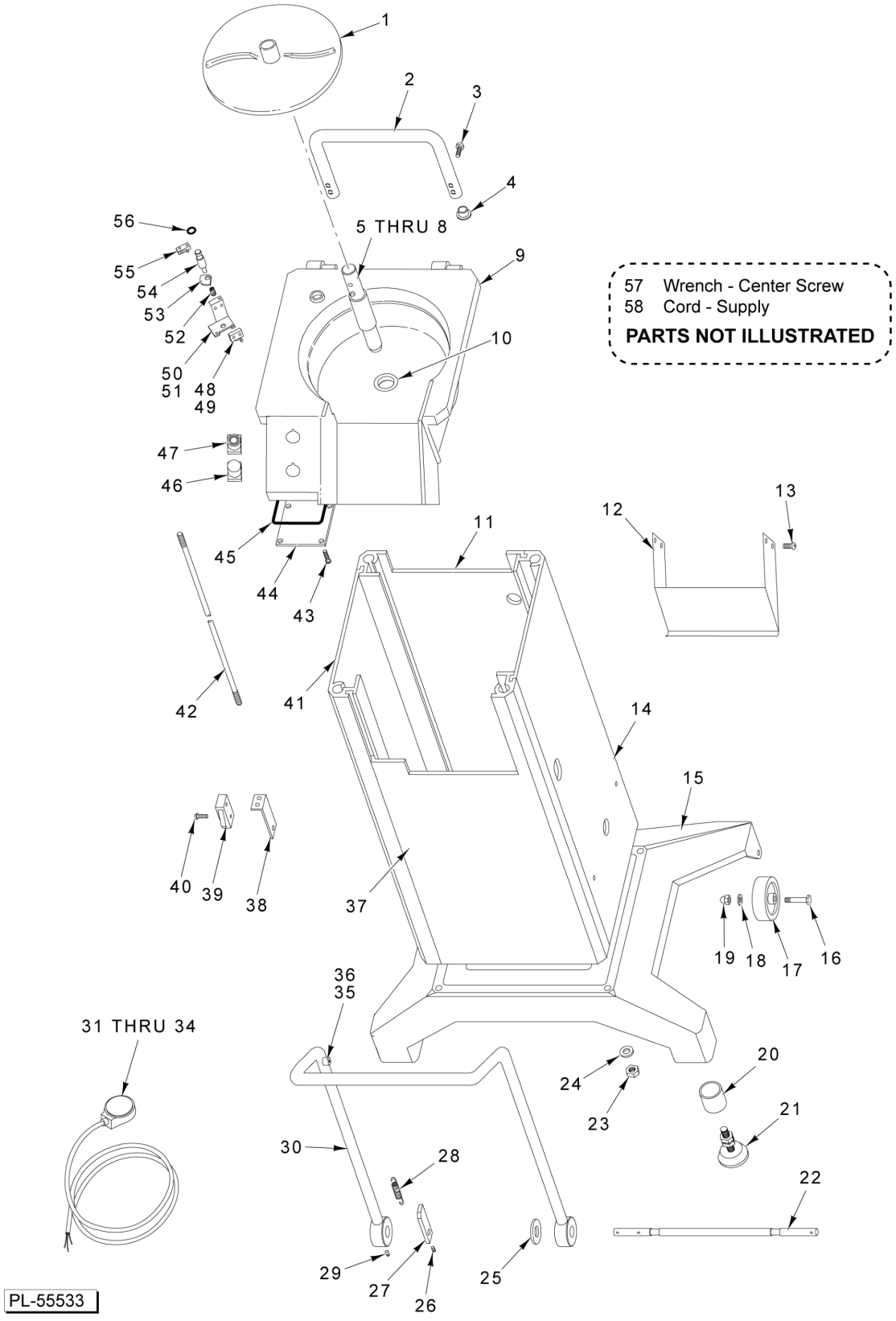

HOUSING UNIT

HOUSING UNIT

ILLUS. PL-55533	PART NO.	NAME OF PART	AMT.
1	00-439142	Ejector	1
2	00-478830	Handle - Knife Chamber	1
3	SC-124-26	Mach. Screw M8 x 1.25 x 30mm Slotted Pan Hd. (SST)	2
4	00-478881	Plug	1
5	00-478850	Shaft - Knife Assy	1
6	00-439124	Pin - Carrier	1
7	SC-121-48	Set Screw M8 x 1.25 x 12mm Slotted Hdls. Cup Pt. (SST)	1
8	00-478844	Pin	1
9	00-478833	Housing - Knife	1
10	00-439129	Washer - Seal	1
11	00-478902	NLA - Obsolete--Housing - Back	1
12	00-478832	NLA - Obsolete--Guard - Chute	1
13	SC-124-25	Mach. Screw M5 x 0.8 x 12mm Slotted Truss Hd. (SST)	4
14	00-478901	Housing - Right	1
15	00-478834	NLA - Obsolete--Base	1
16	SC-124-22	Cap Screw M8 x 1.25 x 70mm Hex Hd. (SST)	2
17	00-478877	Wheel	2
18	00-478885	NLA - Obsolete--Washer - Wheel	2
19	NS-048-42	Crown Nut M8 x 1.25 (SST)	2
20	00-478845	Tube - Protection	2
21	00-478878	Foot - Rubber	2
22	00-478829	Shaft - Lock Handle	1
24	WL-019-74	Lockwasher M8 Helical (SST)	1
25	00-478823	Bushing - Lock Handle	2
26	SC-124-27	Set Screw M8 x 1.25 x 15mm Slotted Hdls. Dog Pt. (SST)	1
27	00-478828	Stop - Lock Handle	1
28	00-478831	Spring - Tension	2
29	SC-124-28	Set Screw M8 x 1.25 x 25mm Slotted Hdls. Dog Pt. (SST)	2
30	00-478820	Handle - Lock	1
31	FE-025-09	Relief - Stain Electrical	1
32	00-479036	Nut - Strain Relief	1
33	00-478853	Cord - Supply (US)	1
34	00-437985	Plug (240 V.)	1
35	00-478827	Roller - Handle Locking	2
36	00-478876	Ring Lock	2
37	00-478900	NLA - Obsolete--Housing - Front	1
38	00-478840	NLA - Obsolete--Bracket - Angle	1
39	00-087711-00288	Switch - Limit	1
40	SC-124-24	Mach. Screw M3 x 0.5 x 20mm Slotted Pan Hd. (SST)	1
41	00-478903	Housing - Left	1
42	00-478813	NLA - Obsolete--Rod - Threaded	4
43	SD-037-41	Self-Tapping Screw 3.5 x 13mm Phil. Oval Hd., Type AB (SST)	6
44	00-478826	Plate - Cover	1
45	00-478873	Seal - Switch Cover	1
46	00-478897	Switch Assy. (Stop)	1
47	00-478898	Switch Assy. (Start)	1
48	00-087711-00288	Switch - Limit	1
49	SD-038-60	Self-Tapping Screw 4.8 x 9.5mm Phil. Pan Hd., Type AB (SST)	2
50	00-478837	Bracket - Interlock Switch	1
51	SC-124-24	Mach. Screw M3 x 0.5 x 20mm Slotted Pan Hd. (SST)	4
52	00-939211	Spring - Interlock Switch	1
53	00-478839	Plate - Thrust	1
54	00-478838	Shaft - Interlock Switch	1
55	00-087711-00288	Switch - Limit	1
56	00-478875	Seal - O-Ring	1
57	00-439923	Wrench - Center Screw	1
58	00-479705	Cord - Supply (380-400 V., 50 Hz., 3 Ph.)	1

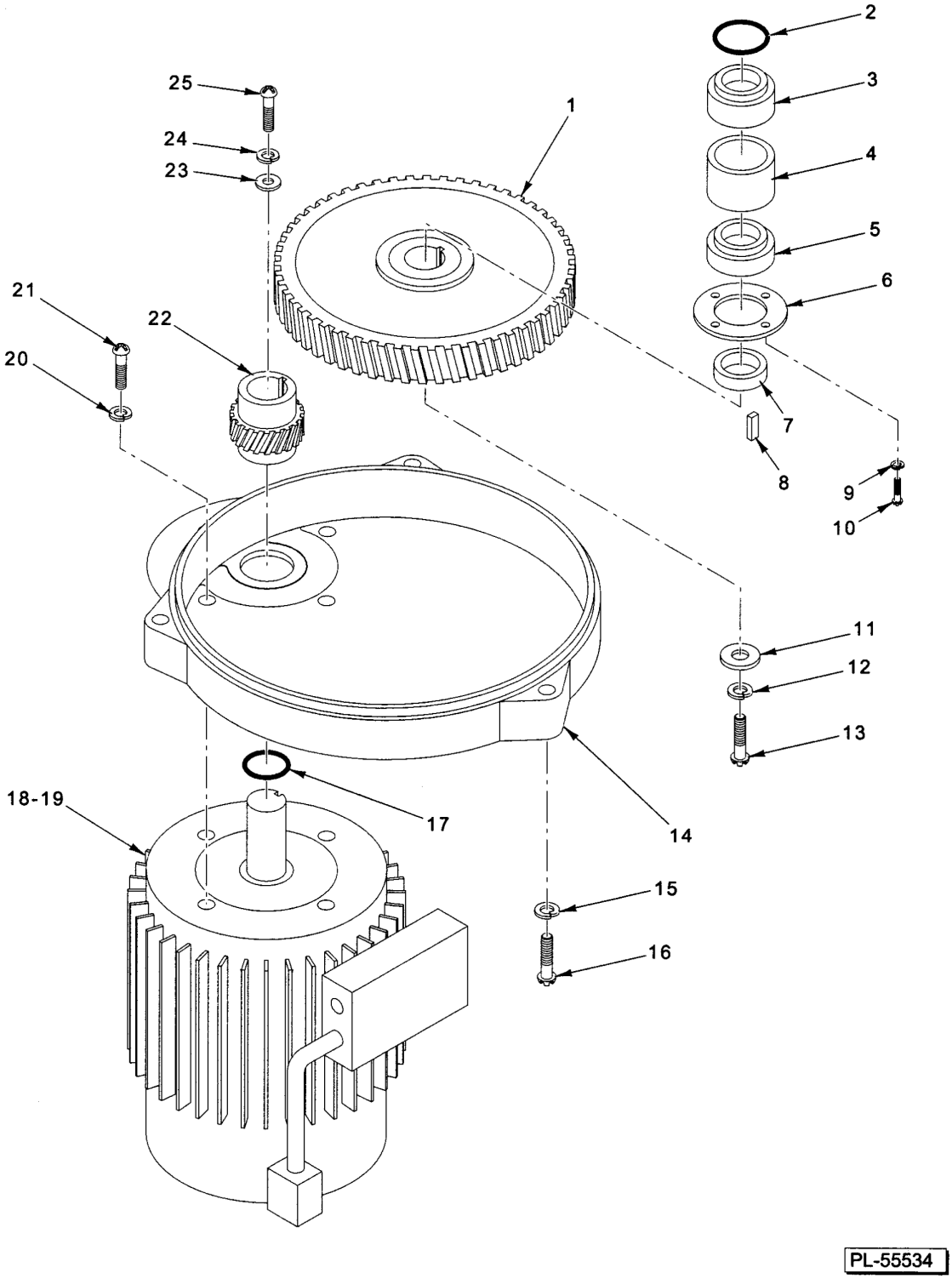

MOTOR AND GEARING

MOTOR AND GEARING

MOTOR AND GEARING

ILLUS. PL-55534	PART NO.	NAME OF PART	AMT.
1	00-478812	Gear - Drive	1
2	00-478871	Ring - Seal	1
3	BB-017-39	Ball Bearing	1
4	00-478810	Ring - Spacer	1
5	BB-021-43	Ball Bearing	1
6	00-478809	Cover - Bearing	1
7	00-478811	Spacer	1
8	00-478872	Key	1
9	WL-019-75	Lockwasher M5 Helical (SST)	4
10	SC-118-37	Mach. Screw M5 x 0.8 x 12mm Slotted Pan Hd. (SST)	4
11	00-478846	Washer	1
12	WL-019-74	Lockwasher M8 Helical (SST)	1
13	SC-121-16	Cap Screw M8 x 1.25 x 22mm Hex Hd. (SST)	1
14	00-478836	NLA - Obsolete--Housing - Gear	1
15	WL-019-74	Lockwasher M8 Helical (SST)	3
17	00-478882	Ring - Seal	1
18	00-478896	Motor (208-240 V., 60 Hz., 3 Ph., UL)	1
19	00-479705	Motor (380-400 V., 50 Hz., 3 Ph.)	1
20	WL-019-74	Lockwasher M8 Helical (SST)	4
21	SC-121-16	Cap Screw M8 x 1.25 x 22mm Hex Hd. (SST)	4
22	00-478821	Gear - Pinion	1
23	00-478847	Washer	1
24	WL-019-89	Lockwasher M10 Helical (SST)	1
25	SC-124-23	Cap Screw M10 x 1.5 x 30mm Hex Hd. (SST)	1

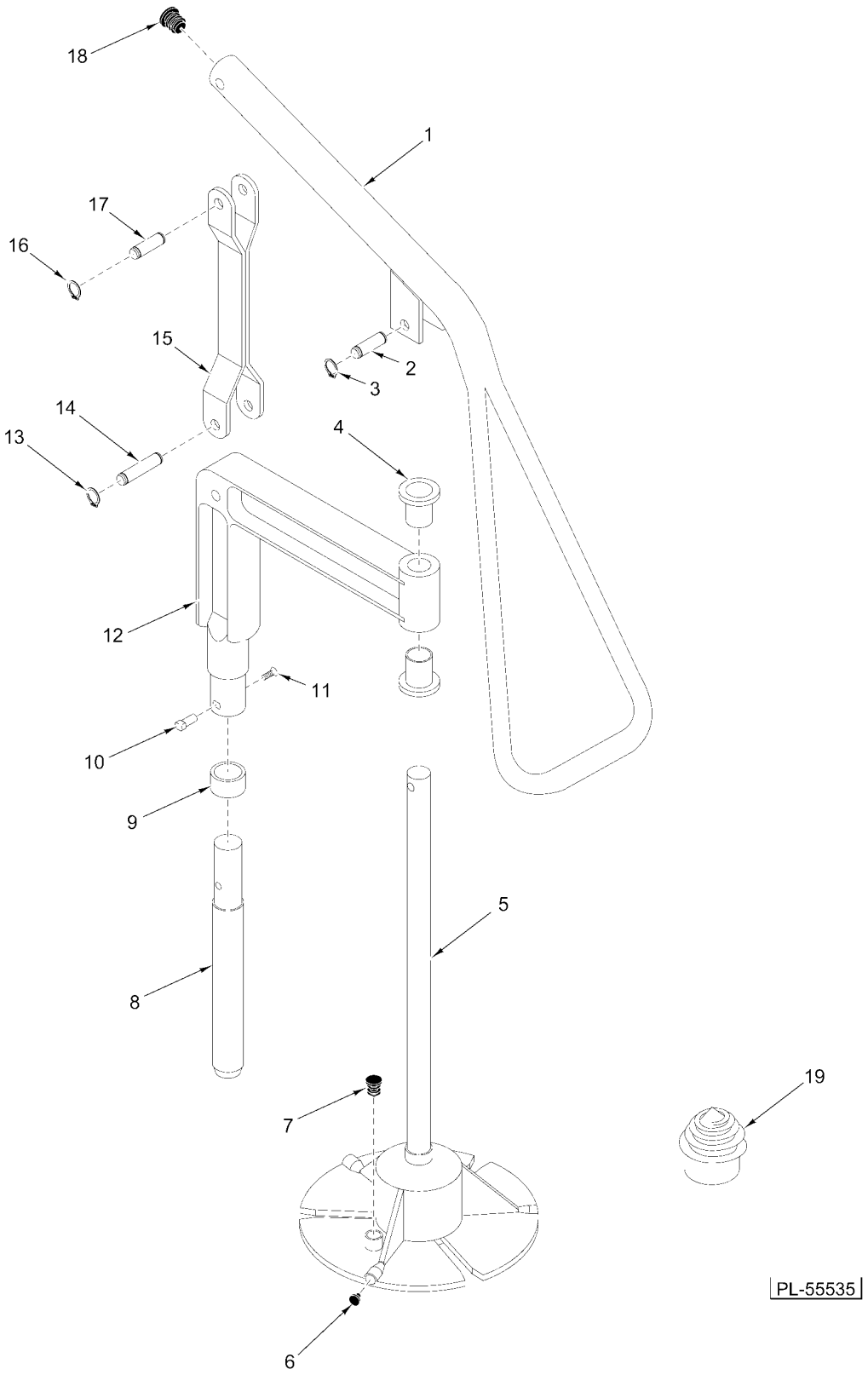

MANUAL PUSH FEED ASSEMBLY

MANUAL PUSH FEED ASSEMBLY

ILLUS. PL-55535	PART NO.	NAME OF PART	AMT.
1	00-478816	Lever	1
2	00-478870	Pin - Pivot (L34)	1
3	00-478880	Ring - Locking	2
4	00-478825	Bushing - Stand	2
5	00-478904	Shaft - Piston Assy	1
6	00-478864	Knob - Guide	3
7	00-478888	Plug	1
8	00-478814	Stand - Shaft	1
9	00-478819	Bushing	1
10	00-478856	Pin - Stand	1
11	SC-118-36	Mach. Screw M5 x 0.8 x 16mm Slotted Flat Hd. (SST)	1
12	00-478835	Frame - Stand	1
13	00-478880	Ring - Locking	2
14	00-478868	Pin - Pivot (L51)	1
15	00-478815	Link	1
16	00-478880	Ring - Locking	2
17	00-478869	Pin - Pivot (L38)	1
18	00-478888	Plug V	1
19	00-478939	Screw - Decoring	1

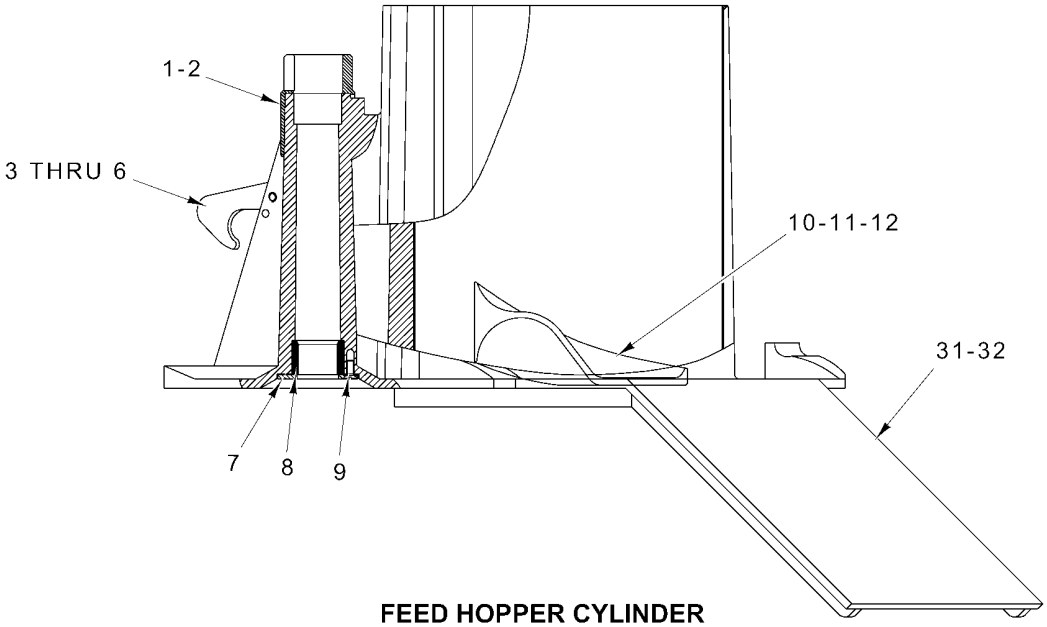

FEED HOPPER CYLINDER

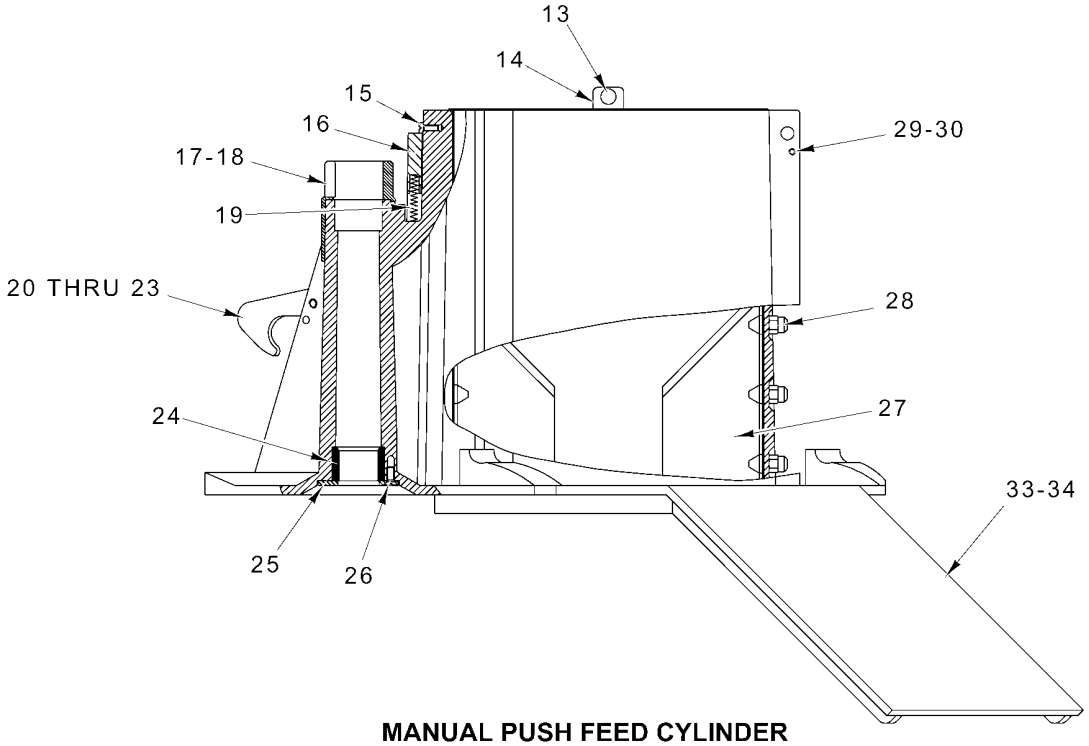

MANUAL PUSH FEED CYLINDER

PL-55586

FEED CYLINDER ASSEMBLIES

FEED CYLINDER ASSEMBLIES

ILLUS. PL-55586	PART NO.	NAME OF PART	AMT.
1	00-478863	Sleeve - Bayonet	1
2	SC-124-30	Mach. Screw M5 x 0.8 x 10 mm Slotted Oval Hd. (SST)	2
3	00-478887	Washer	1
4	00-478859	NLA - Obsolete--Clutch - Locking	1
5	SC-124-31	Mach. Screw M6 x 1 x 16mm Slotted Truss Hd. (SST)	1
6	00-478867	Washer	2
7	00-478818	Bushing 25/34	1
8	00-478817	Cover - Bushing	1
9	SD-038-41	Self-Tapping Screw 4.8mm x 13mm Slotted Oval Hd., Type AB (SST)	3
10	00-478857	Guide	2
11	00-478906	Rod - Threaded	4
12	NS-047-34	Nut M6 x 1 Crown (SST)	4
13	00-439121	Rivet - Plastic	2
14	00-478905	Knob - Slide	1
15	SD-037-40	Self-Tapping Screw 3.5mm x 9.5mm Slotted Oval Hd., Type AB (SST)	1
16	00-478822	Stopper - Pusher	1
17	00-478863	Sleeve - Bayonet	1
18	SC-124-30	Mach. Screw M5 x 0.8 x 10 mm Slotted Oval Hd. (SST)	1
19	00-478879	Spring	1
20	00-478867	Washer	1
21	00-478887	Washer	1
22	00-478859	NLA - Obsolete--Clutch - Locking	1
23	SC-124-31	Mach. Screw M6 x 1 x 16mm Slotted Truss Hd. (SST)	1
24	00-478818	Bushing 25/34	1
25	00-478817	Cover - Bushing	1
26	SD-038-41	Self-Tapping Screw 4.8mm x 13mm Slotted Oval Hd., Type AB (SST)	3
27	00-478842	Knife	3
28	00-478858	Nut - Special Domed	9
29	SC-121-19	Mach. Screw M4 x 0.7 x 16mm Slotted Pan Hd. (SST)	1
30	NS-200-03	Nut M4 x 0.7 Hex (SST)	1
31	00-479085	Feed Hopper Cylinder (US) (Incls. Items 1 thru 12)	1
32	00-479085-00002	Feed Hopper Cylinder (Canada)	1
33	00-478957	Push Feed Cylinder (US) (Incls. Items 13 thru 30)	1
34	00-478957-00002	Push Feed Cylinder (Canada)	1
	00-479094	Tool	1

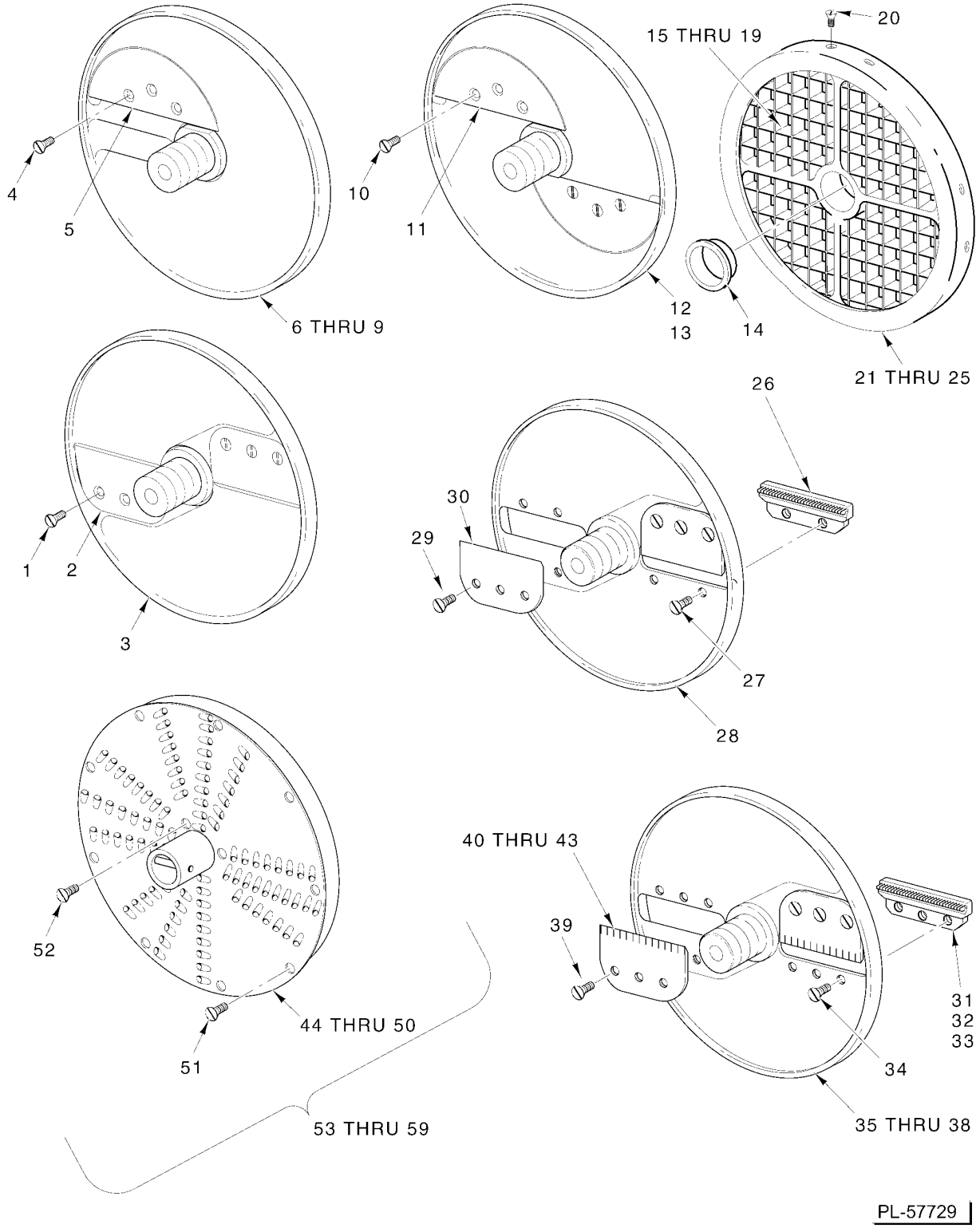

ACCESSORIES

ACCESSORIES

ILLUS. PL-57729	PART NO.	NAME OF PART	AMT.
1	SC-120-82	Mach. Screw M5 x 0.8 x 6mm Slotted Flat Hd. (SST)	6
2	00-439157	Knife - Standard Slicer	2
3	00-439298	Plate - Standard Slicer 3/8 In. (Incls. Items 1 & 2)	1
4	SC-120-82	Mach. Screw M5 x 0.8 x 6mm Slotted Flat Hd. (SST)	3
5	00-439158	Knife - Fine Slicer	1
6	00-439170	Plate - Fine Slicer 5/32 In. (Incls. Items 4 & 5)	1
7	00-439171	Plate - Fine Slicer 7/32 In. (Incls. Items 4 & 5)	1
8	00-439172	Plate - Fine Slicer 3/8 In. (Incls. Items 4 & 5)	1
9	00-439303	Plate - Fine Slicer 9/16 In. (Incls. Items 4 & 5)	1
10	SC-120-82	Mach. Screw M5 x 0.8 x 6mm Slotted Flat Hd. (SST)	6
11	00-439158	Knife - Fine Slicer	2
12	00-439164	Plate - Fine Slicer 1/16 In. (Incls. Items 10 & 11)	1
13	00-439169	Plate - Fine Slicer 1/8 In. (Incls. Items 10 & 11)	1
14	00-875674	Ring - Center	1
15	00-477791	Kit - Knife 9/32 In.	1
16	00-477792	Kit - Knife 3/8 In.	1
17	00-477793	Kit - Knife 1/2 In.	1
18	00-477794	Kit - Knife 5/8 In.	1
19	00-477795	Kit - Knife 3/4 In.	1
20	SC-121-13	Mach. Screw M4 x 0.7 x 8mm Slotted Flat Hd. (SST)	8
21	00-477786	Plate - Dicer (9/32 In.)	1
22	00-477787	Plate - Dicer (3/8 In.)	1
23	00-477788	Plate - Dicer (1/2 In.)	1
24	00-477789	Plate - Dicer (5/8 In.)	1
25	00-477790	Plate - Dicer 3/4 In.	1
26	00-439175	Knife - Balk 3/32 In.	2
27	SC-120-83	Mach. Screw M4 x 0.7 x 6mm Slotted Flat Hd. (SST)	4
28	00-439174	Plate - Julienne 3/4 In. (Incls. Items 26, 27, 29, & 30)	1
29	SC-120-82	Mach. Screw M5 x 0.8 x 6mm Slotted Flat Hd. (SST)	6
30	00-439157	Knife - Standard Slicer	2
31	00-439177	Knife - Balk 3/16 In.	2
32	00-439179	Knife - Balk 7/32 In.	2
33	00-439162	Knife - Balk 3/8 In.	2
34	SC-121-13	Mach. Screw M4 x 0.7 x 8mm Slotted Flat Hd. (SST)	6
35	00-439173	Plate - Crimping 3/16 In. (Not Shown) (Incls. Items 39 & 40)	1
36	00-439176	Plate - Julienne 3/16 In. (Incls. Items 31, 34, 39, & 41)	1
37	00-439178	Plate - Julienne 7/32 In. (Incls. Items 32, 34, 39, & 42)	1
38	00-439180	Plate - Julienne 3/8 In. (Incls. Items 33, 34, 39, & 43)	1
39	SC-120-82	Mach. Screw M5 x 0.8 x 6mm Slotted Flat Hd. (SST)	6
40	00-439159	Knife - Crimping Slicer 3/16 In. (Not Shown)	2
41	00-439160	Knife - Julienne 3/16 In.	2
42	00-439161	Knife - Julienne 7/32 In.	2
43	00-439163	Knife - Julienne 3/8 In.	2
44	00-439143	Insert - Fine Grater	1
45	00-439145	Insert - Shredder Plate 1/16 In. (1.5mm)	1
46	00-439146	Insert - Shredder Plate 5/64 In. (2mm)	1
47	00-439147	Insert - Shredder Plate 1/8 In. (3mm)	1
48	00-439148	Insert - Shredder Plate 5/32 In. (4.5mm)	1
49	00-439149	Insert - Shredder Plate 7/32 In. (6mm)	1
50	00-439150	Insert - Shredder Plate 5/16 In. (8mm)	1
51	SC-120-85	Mach. Screw M3 x 0.5 x 6mm Slotted Flat Hd. (SST)	9
52	SC-120-85	Mach. Screw M3 x 0.5 x 6mm Slotted Flat Hd. (SST)	3
53	00-439144	Plate - Fine Grater (Incls. Items 44 & 51)	1
54	00-439151	Plate - Shredder 1/16 In. (Incls. Items 45, 51, & 52)	1
55	00-439152	Plate - Shredder 3/32 In. (Incls. Items 46, 51, & 52)	1

ACCESSORIES

ILLUS. PL-57729	PART NO.	NAME OF PART	AMT.
56	00-439153	Plate - Shredder 1/8 In. (Incls. Items 47, 51, & 52)	1
57	00-439154	Plate - Shredder 3/16 In. (Incls. Items 48, 51, & 52)	1
58	00-439155	Plate - Shredder 7/32 In. (Incls. Items 49, 51, & 52)	1
59	00-439156	Plate - Shredder 5/16 In. (Incls. Items 50, 51, & 52)	1
	00-439297	Plate - French Fry 3/8 In. (Not Shown)	1
	00-274372	Wall Rack (Incls. Label)	1
	00-435091	Work Table	1
	00-333692	Foot - Adjustable	1
	00-333691	Insert - Leveler	1

NOTES

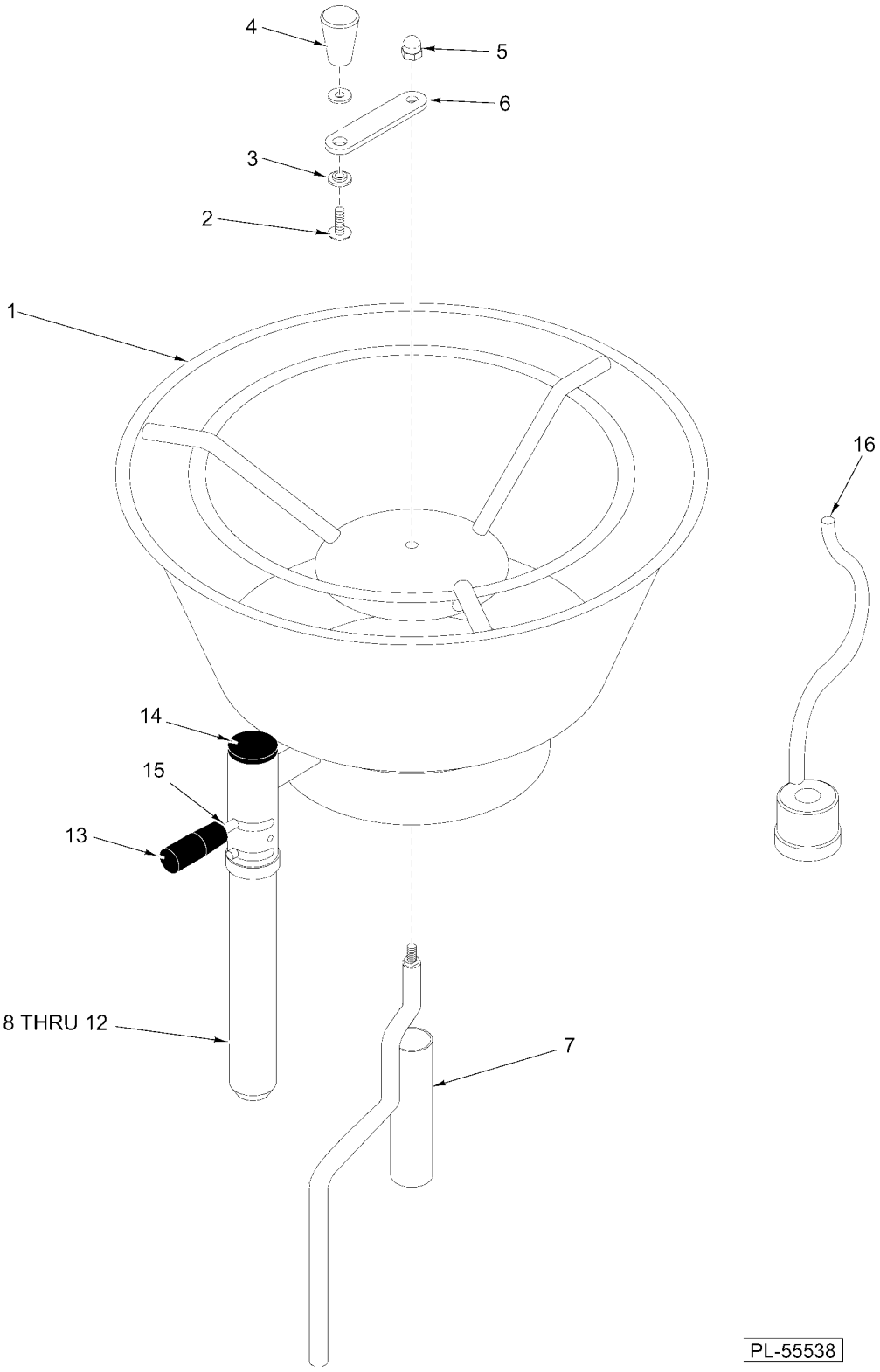

FEED HOPPER ASSEMBLY

FEED HOPPER ASSEMBLY

ILLUS. PL-55538	PART NO.	NAME OF PART	AMT.
1	00-478848	Insert - Hopper	1
2	SC-124-31	Mach. Screw M6 x 1 x 16mm Slotted Truss Hd. (SST)	1
3	00-478867	Washer	2
4	00-478866	Knob - Crank	1
5	NS-047-34	Nut M6 x 1 Crown (SST)	1
6	00-478861	Crank - Hopper	1
7	00-478860	Lever - Stir	1
8	00-478824	Shaft	1
9	00-478865	Bushing	1
10	00-478841	Pin - Bayonet	1
11	00-478889	Spring	1
12	00-478890	Ball	1
13	00-478883	Handle	1
14	00-478884	Plug	1
15	00-477254	Screw - Handle	1
16	00-478862	Agitator - Screw (Use to Secure Cutting Plates)	1

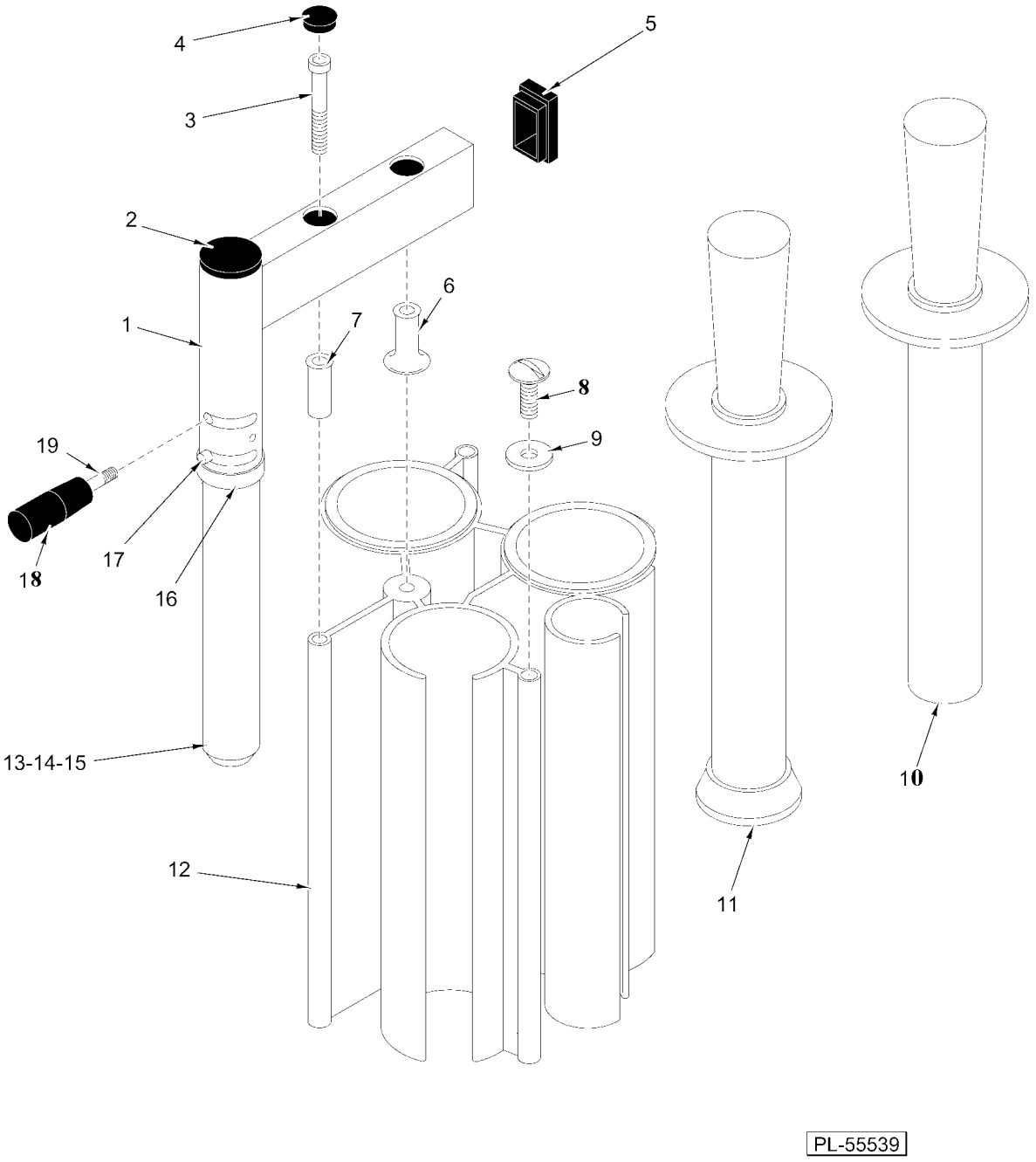

TUBE FEED ASSEMBLY

TUBE FEED ASSEMBLY

ILLUS. PL-55539	PART NO.	NAME OF PART	AMT.
1	00-479576	Stand - Tube Feeder	1
2	00-478884	Plug	1
3	SC-117-18	Cap Screw M8 x 1.25 x 40mm Soc. Hex Hd	2
4	00-479574	Plug (1 KPT)	2
5	00-479573	Plug - Rectangle (IR20)	1
6	00-479572	NLA - Obsolete--Spacer - Flanged (25)	1
7	00-479571	NLA - Obsolete--Spacer (16)	1
8	SC-119-03	NLA - Obsolete--Mach. Screw M8 x 1.25 x 16mm Slotted Mushroom Hd. (SST)	2
9	00-479570	Washer - Special	2
10	00-479567	Plunger - Narrow	1
11	00-479568	Plunger - Wide	1
12	00-479575	NLA - Obsolete--Insert - 4 Tube	1
13	00-478824	Shaft	1
14	00-478889	Spring	1
15	00-478890	Ball	1
16	00-478865	Bushing	1
17	00-478841	Pin - Bayonet	1
18	00-478883	Handle	1
19	00-477254	Screw - Handle	1
	00-479569	Bolt - Locking (Use to Secure Cutting Plates)	1

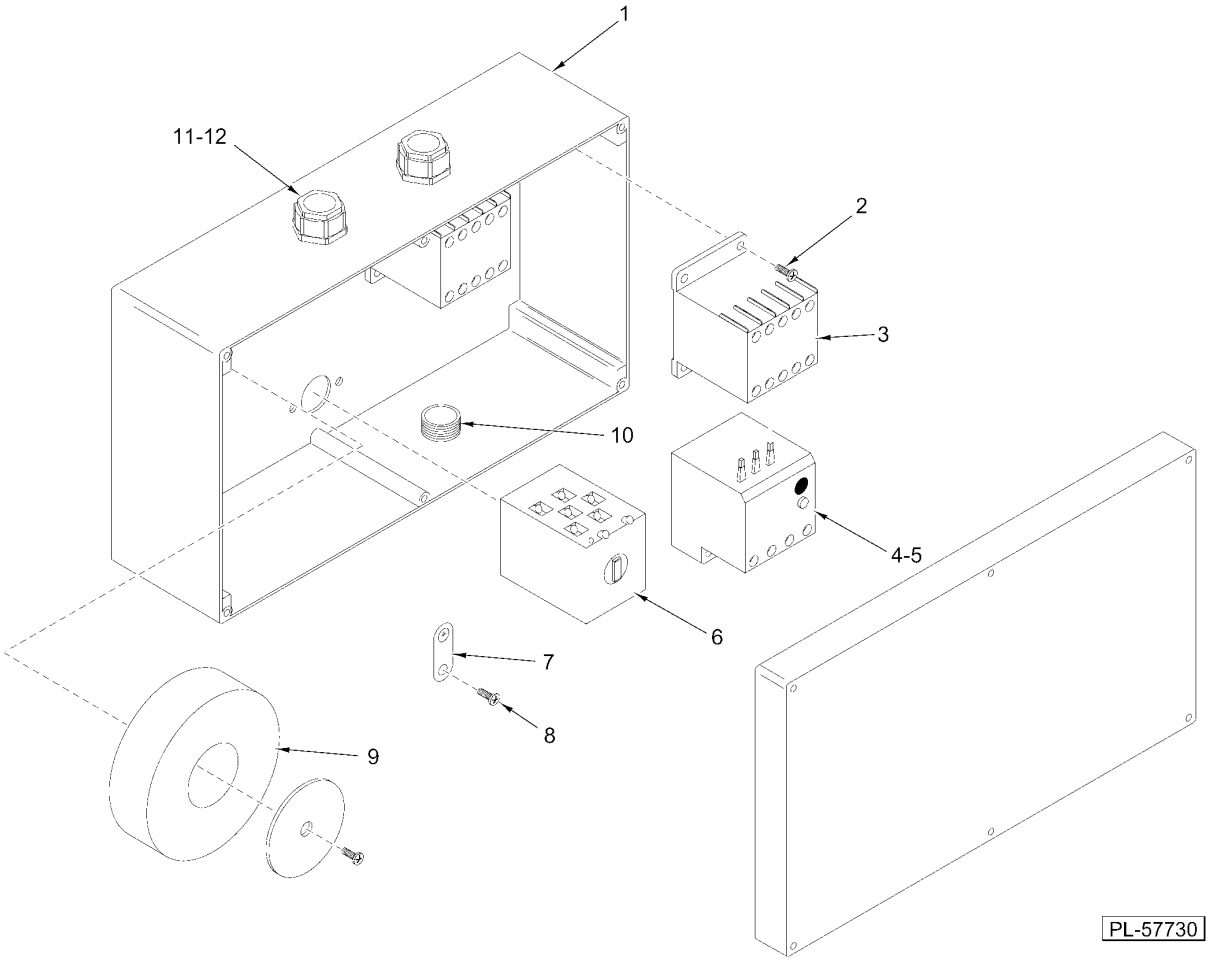

ELECTRICAL BOX ASSEMBLY

ELECTRICAL BOX ASSEMBLY

ILLUS. PL-57730	PART NO.	NAME OF PART	AMT.
1	00-478899	Box - Electrical (With Lid)	1
2	SC-118-28	Mach. Screw M4 x 0.7 x 12mm Slotted Pan Hd. (SST)	3
3	00-087713-089-4	Contactor (24 VAC)	2
4	00-479102	Relay - Overload (208 V.)	1
5	00-088196-017-6	Relay - Overload (380 V.)	1
6	00-479035	Switch - Speed Assy. (Incls. Hardware)	1
7	00-478892	NLA - Obsolete--Plate - Ground	1
8	SC-124-29	Mach. Screw M3 x 0.5 x 12mm Slotted Flat Hd. (SST)	1
9	00-478907	Transformer (208-240 V.)	1
10	00-478894	Seal - Cable	2
11	00-478893	Seal - Cable	1
12	00-478895	NLA - Obsolete--Nut - Special	2