CATALOG OF REPLACEMENT PARTS



MODEL FP300 FOOD PROCESSOR

ML-104495	FP300
ML-134181	FP300C

A product of HOBART 701 S. RIDGE AVENUE TROY, OHIO 45374-0001

FORM 19180 Rev. A (May 2014)

 © HOBART 2014

Table of Contents

5 HOUSING UNIT
7 MOTOR AND BASE UNIT
9 ACCESSORIES
11 PUSH FEED HANDLE UNIT

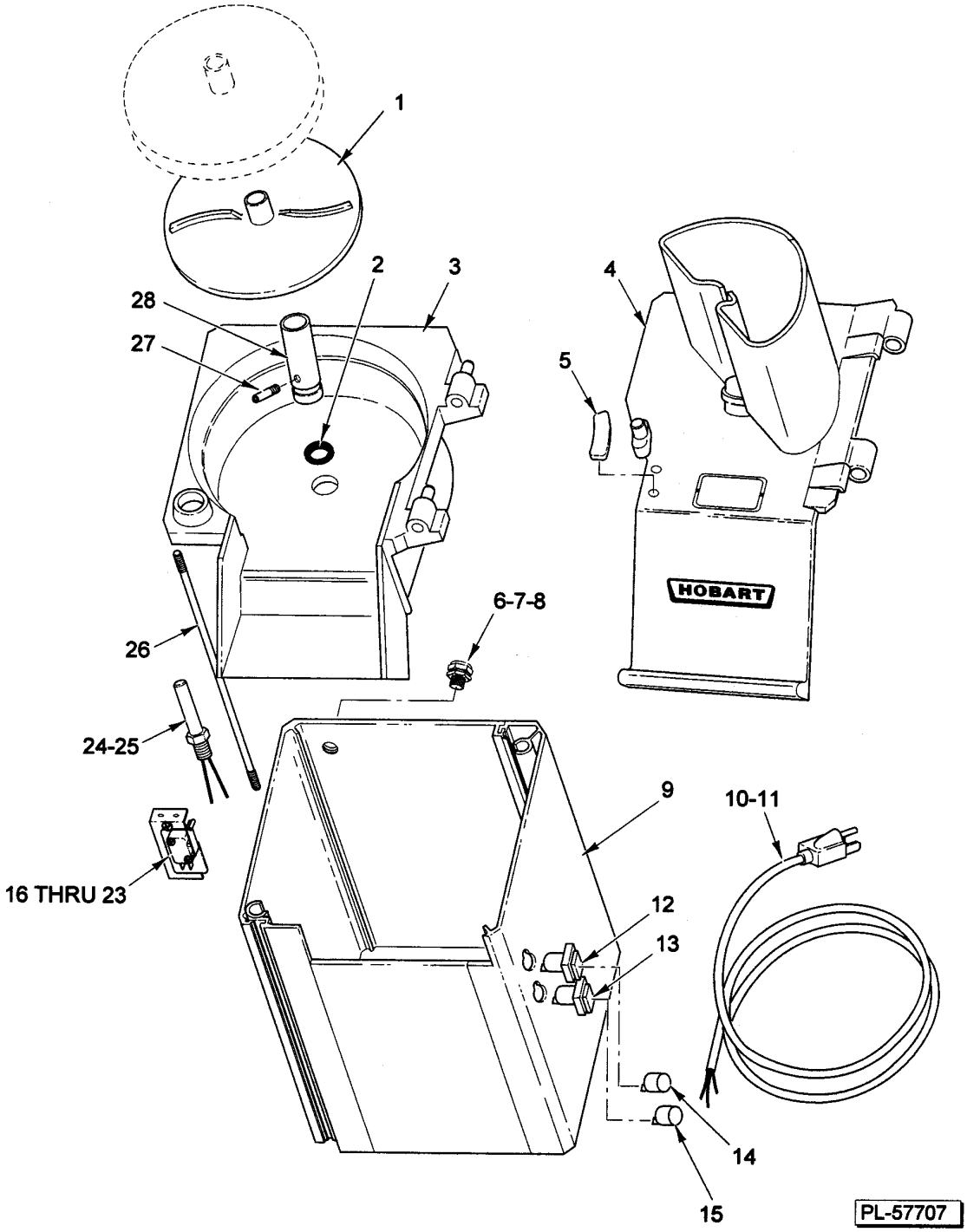

HOUSING UNIT

HOUSING UNIT

HOUSING UNIT

ILLUS. PL-57707	PART NO.	NAME OF PART	AMT.
1	00-439142	Ejector	1
2	00-439129	Seal - Washer	1
3	00-439130	Knife - Chamber	1
4	00-439287	Feed Head Assy. (Incls. Item 5)	1
5	00-439119	Plate - Friction	1
6	00-439168	Flange - Reducing	1
7	FE-024-37	Relief - Strain (Power Cord) (110/120 V.)	1
8	FE-025-35	Relief - Strain (Power Cord) (220/240 V.)	1
9	00-439141	Housing Assy	1
10	00-274857	Cord & Plug (110/120 V.)	1
11	00-477265	Cord & Plug (220/240 V.)	1
12	00-477266	Button - Stop (220/240 V.)	1
13	00-477267	Button - Start (220/240 V.)	1
14	00-875522	Button - Stop (110/120 V.)	1
15	00-875523	Button - Start (110/120 V.)	1
16	00-439300	Micro-Switch Assy	4
17	00-439301	Bracket - Switch	1
18	00-439302	Plate - Insulating	1
19	SD-017-34	Self-Tapping Screw 6-20 x 5/8 Truss Hd	2
20	SC-122-37	Mach. Screw M4 x 0.7 x 10mm Pan Hd. SST	2
21	NS-200-03	Nut Hex M4 x 0.7 (SST.)	2
22	SC-122-37	Mach. Screw M4 x 0.7 x 10mm Pan Hd. SST	2
23	WL-200-03	Lockwasher	2
24	00-439663	Switch - Reed (110/120 V.)	1
25	00-477264	Switch - Reed PR15 (220/240 V.)	1
26	00-439131	Kit - Pull Rod	1
27	00-274323	Pin	1
28	00-439125	Sleeve - Thrust	1

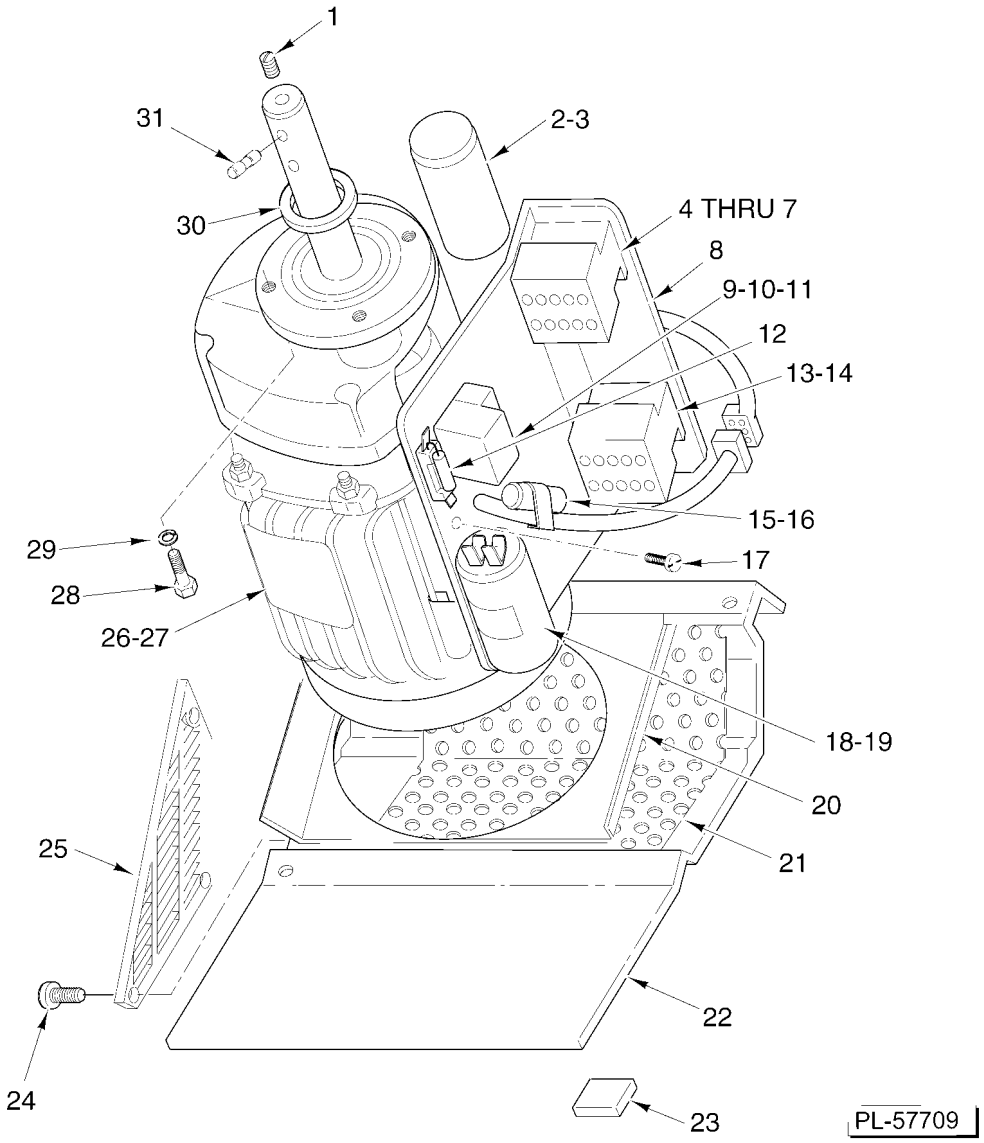

MOTOR AND BASE UNIT

MOTOR AND BASE UNIT

ILLUS. PL-57709	PART NO.	NAME OF PART	AMT.
1	SC-121-48	Set Screw M8 x 1.25 x 12mm Socket Hdls., Cup Pt. (SST)	1
2	00-439140	Capacitor - Run (80) (110/120 V.)	1
3	00-477277	Capacitor (80MF) (220/240 V.)	1
4	00-875529	Protector - Overload LRD16 10-13 (110/120 V.)	1
5	00-875526	Contactor (110/120 V.)	1
6	00-914116	Protector - Overload LRD16 10-13 (220/240 V.)	1
7	00-914114	Contactor (220/240 V.)	1
8	00-439139	Panel & Hardware Control	1
9	00-479591	Kit - Start Relay	1
10	00-087714-00061	Relay (110/120 V.)	1
11	00-477278	Relay - Start (230 V.)	1
12	00-439167	Resistor Assy. (Service Only)	2
13	00-914113	Contactor (110/120 V.)	1
14	00-087713-00100	Contactor (110/120 V.) (FP300C)	1
15	00-274344	Circuit - RC (110 V.)	1
16	00-274860	Circuit - RC (220 V.)	1
17	SC-200-20	Mach. Screw M5 x 0.8 x 6mm Slotted Cheese Hd	1
18	00-439137	Capacitor - Start (110/120 V.)	1
19	00-477276	Capacitor (220/240 V.) (20MF)	1
20	00-439136	Plate - Fan	1
21	00-439296	Plate - Protector	1
22	00-439135	Base	1
23	00-274353	Foot - Rubber	4
24	SD-037-40	Self-Tapping Screw 3.5 x 9.5mm Slotted Oval Hd., Type AB (SST)	3
25	00-274351	Louver - Left & Right	1
26	00-439134	Motor - Gear (120 V.) (Incls. Fan, Shroud & Gear)	1
27	00-477273	Motor (220/240 V.)	1
28	SC-118-43	Cap Screw M6 x 1.0 x 20mm Hex Hd. (SST)	4
29	WL-006-17	Lockwasher 1/4 Helical (SST)	4
30	00-439133	Ring - Seal	1
31	00-439124	Pin - Carrier	1
	00-479592	Connector - Motor (220/240 V.) (Included In Item 10)	1
	00-333692	Foot - Adjustable	4
	00-477268	Fuse T100 (220/240 V.)	1
	00-477269	Holder - Fuse	1

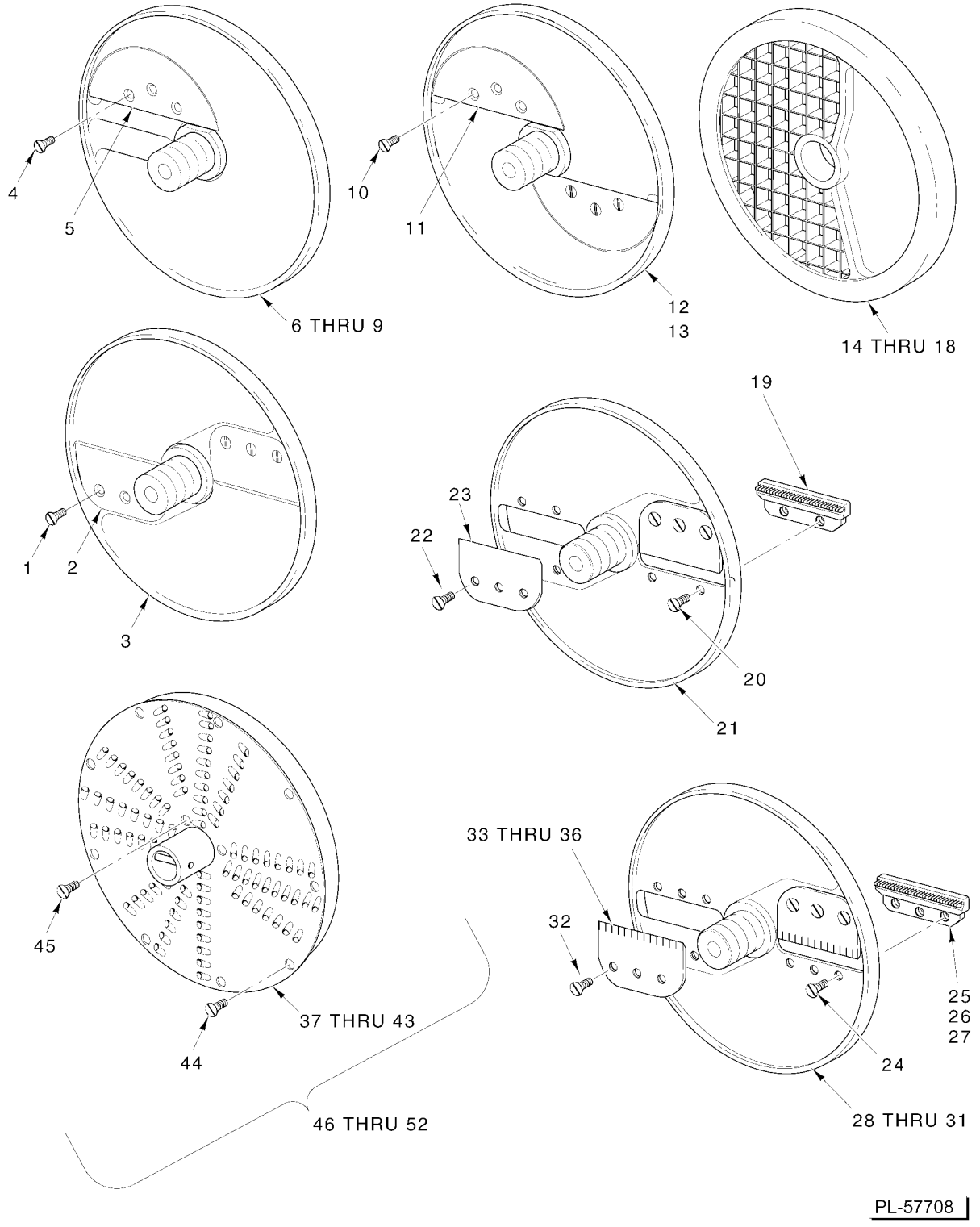

ACCESSORIES

ACCESSORIES

ILLUS. PL-57708	PART NO.	NAME OF PART	AMT.
1	SC-120-82	Mach. Screw M5 x 0.8 x 6mm Slotted Flat Hd. (SST)	6
2	00-439157	Knife - Standard Slicer	2
3	00-439298	Plate - Standard Slicer 3/8In. (Incls. Items 1 & 2)	1
4	SC-120-82	Mach. Screw M5 x 0.8 x 6mm Slotted Flat Hd. (SST)	3
5	00-439158	Knife - Fine Slicer	1
6	00-439170	Plate - Fine Slicer 5/32 In. (Incls. Items 4 & 5)	1
7	00-439171	Plate - Fine Slicer 7/32 In. (Incls. Items 4 & 5)	1
8	00-439172	Plate - Fine Slicer 3/8 In. (Incls. Items 4 & 5)	1
9	00-439303	Plate - Fine Slicer 9/16 In. (Incls. Items 4 & 5)	1
10	SC-120-82	Mach. Screw M5 x 0.8 x 6mm Slotted Flat Hd. (SST)	6
11	00-439158	Knife - Fine Slicer	2
12	00-439164	Plate - Fine Slicer 1/16 In. (Incls. Items 10 & 11)	1
13	00-439169	Plate - Fine Slicer 1/8 In. (Incls. Items 10 & 11)	1
14	00-477313	Plate - Dicer 9/32 In	1
15	00-477312	Plate - Dicer 3/8 In	1
16	00-477311	Plate - Dicer 1/2 In	1
17	00-477310	Plate - Dicer 5/8 In	1
18	00-477309	Plate - Dicer 3/4 In	1
19	00-439175	Knife - Balk 3/32 In	2
20	SC-120-83	Mach. Screw M4 x 0.7 x 6mm Slotted Flat Hd. (SST)	4
21	00-439174	Plate - Julienne 3/4 In. (Incls. Items 19, 20, 22, & 23)	1
22	SC-120-82	Mach. Screw M5 x 0.8 x 6mm Slotted Flat Hd. (SST)	6
23	00-439157	Knife - Standard Slicer	2
24	SC-121-13	Mach. Screw M4 x 0.7 x 8mm Slotted Flat Hd. (SST)	6
25	00-439177	Knife - Balk 3/16 In	2
26	00-439179	Knife - Balk 7/32 In	2
27	00-439162	Knife - Balk 3/8 In	2
28	00-439176	Plate - Julienne 3/16 In. (Incls. Items 24, 25, 32, & 33)	1
29	00-439178	Plate - Julienne 7/32 In. (Incls. Items 24, 26, 32, & 34)	1
30	00-439180	Plate - Julienne 3/8 In. (Incls. Items 24, 27, 32, & 35)	1
31	00-439173	Plate - Crimping 3/16 In. (Not Shown) (Incls. Items 32 & 36)	1
32	SC-120-82	Mach. Screw M5 x 0.8 x 6mm Slotted Flat Hd. (SST)	6
33	00-439160	Knife - Julienne 3/16 In	2
34	00-439161	Knife - Julienne 7/32 In	2
35	00-439163	Knife - Julienne 3/8 In	2
36	00-439159	Knife - Crimping Slicer 3/16 In. (Not Shown)	2
37	00-439143	Insert - Fine Grater	1
38	00-439145	Insert - Shredder Plate 1/16 In	1
39	00-439146	Insert - Shredder Plate 3/32 In	1
40	00-439147	Insert - Shredder Plate 1/8 In	1
41	00-439148	Insert - Shredder Plate 3/16 In	1
42	00-439149	Insert - Shredder Plate 7/32 In	1
43	00-439150	Insert - Shredder Plate 5/16 In	1
44	SC-120-85	Mach. Screw M3 x 0.5 x 6mm Slotted Flat Hd. (SST)	9
45	SC-120-85	Mach. Screw M3 x 0.5 x 6mm Slotted Flat Hd. (SST)	3
46	00-439144	Plate - Fine Grater (Incls. Items 37, 44, & 45)	1
47	00-439151	Plate - Shredder 1/16 In. (Incls. Items 38, 44, & 45)	1
48	00-439152	Plate - Shredder 3/32 In. (Incls. Items 39, 44, & 45)	1
49	00-439153	Plate - Shredder 1/8 In. (Incls. Items 40, 44, & 45)	1
50	00-439154	Plate - Shredder 3/16 In. (Incls. Items 41, 44, & 45)	1
51	00-439155	Plate - Shredder 7/32 In. (Incls. Items 42, 44, & 45)	1
52	00-439156	Plate - Shredder 5/16 In. (Incls. Items 43, 44, & 45)	1
	00-439297	Plate - French Fry 3/8 In. (Not Shown)	1
	00-274372	Wall Rack (Incls. Label)	1
	00-435091	Work Table	1

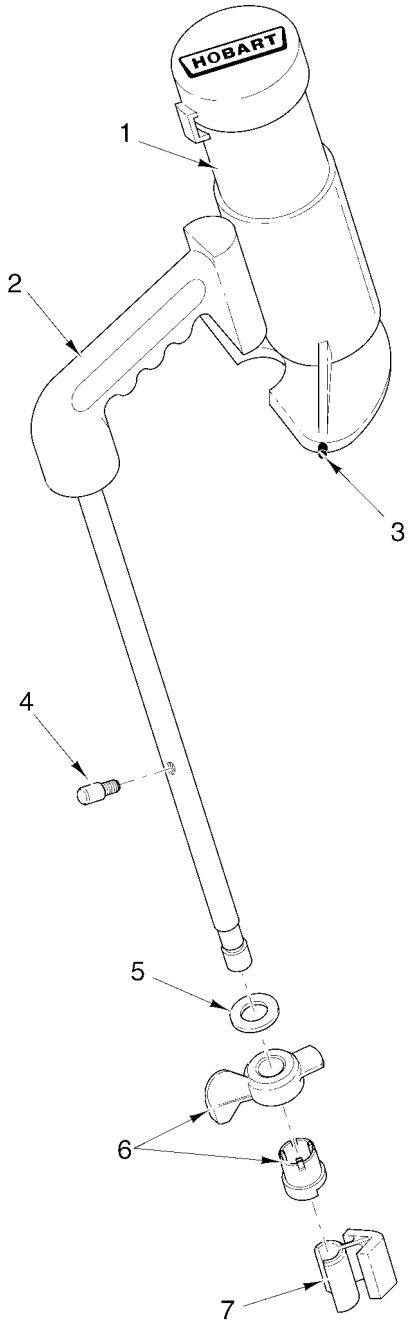

PL-57710

PUSH FEED HANDLE UNIT

PUSH FEED HANDLE UNIT

ILLUS. PL-57710	PART NO.	NAME OF PART	AMT.
1	00-439118	Plunger	1
2	00-439120	Handle - Push (Feed)	1
3	00-439121	Rivit (Plastic)	1
4	00-439123	Pin - Guide	1
5	00-274333	Seal - Rubber Washer 18 x 30mm	1
6	00-479616	Kit - Lock Handle	1
7	00-439128	Activator	1