HOBART

CATALOG OF REPLACEMENT PARTS

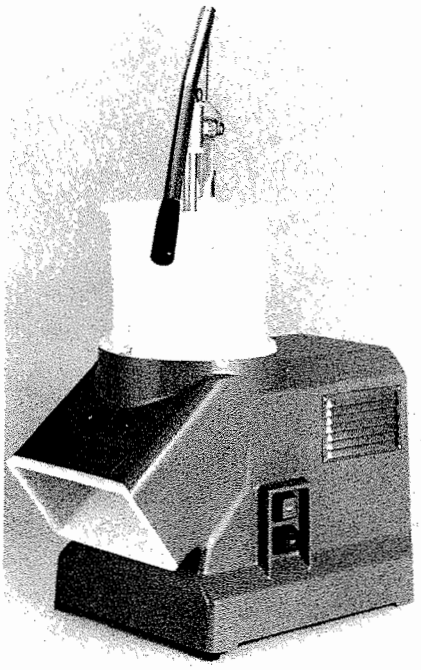

MODEL FP200 FOOD PROCESSOR

ML-103095

A product of HOBART CORPORATION TROY, OHIO 45374

FORM 17782 (Rev. A, 10-90)

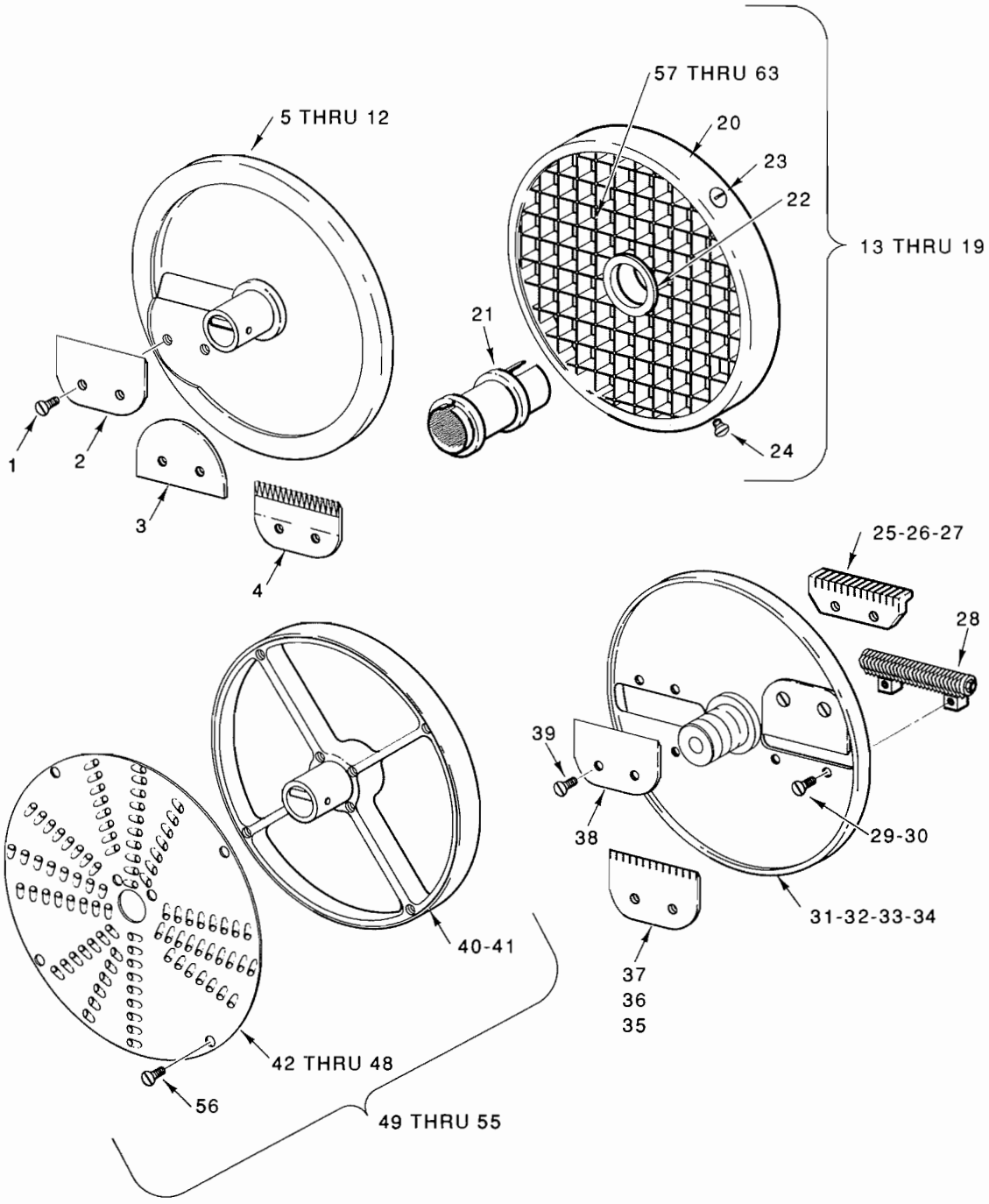

PL-50244

ACCESSORIES

ILLUS. PL-50244	PART NO.	NAME OF PART	AMT.
1	SC-120-82	Mach. Screw M5 X 0.8 X 6MM	AR
2	274317	Knife - Standard Slicer	AR
3	274318	Knife - Fine Slicer	AR
4	435128	Knife - Crimping Slicer	AR
5	294978	Plate Assy - 1/16 Fine Slicer (Incls. items 1 & 3)	1

ACCESSORIES

ILLUS. PL-50244	PART NO.	NAME OF PART	AMT.
6	294979	Plate Assy - 3/32 Fine Slicer (Incls. items 1 & 3)	1
7	435118	Plate Assy - 9/16 Fine Slicer (Incls. items 1 & 3)	1
8	294981	Plate Assy 5/32 Fine Slicer (Incls. items 1 & 3)	1
9	294982	Plate Assy 7/32 Fine Slicer (Incls. items 1 & 3)	1
10	294984	Plate Assy - 3/8 Fine Slicer (Incls. items 1 & 3)	1
11	294976	Plate Assy - 1/2 Cutter Dicing (Incls. items 1 & 3)	1
12	294977	Plate Assy - 3/16 Crimping Slicer (Incls. items 1 & 4)	1
13	294990	Plate Assy - Dicer 9/32 (Incls. items 20, 22, 23, 24 & 57)	1
14	294991	Plate Assy - Dicer 3/8 (Incls. items 20, 22, 23, 24 & 58)	1
15	294992	Plate Assy - Dicer 1/2 (Incls. items 20, 22, 23, 24 & 59)	1
16	294993	Plate Assy - Dicer 5/8 (Incls. items 20, 22, 23, 24 & 60)	1
17	294994	Plate Assy - Dicer 3/4 (Incls. items 20, 22, 23, 24 & 61)	1
18	435119	Plate Assy - Dicer 1 (Incls. items 20, 22, 23, 24 & 62)	1
19	294995	Plate Assy - French Fry 3/8 (Incls. items 20, 22, 23, 24 & 63)	1
20	435192	Ring - Outer Grid	1
21	274809	Tool-Grid Extractor (Used to remove dicer plates)	1
22	435193	Ring - Center Grid	1
23	435194	Screw - Domed Head	1
24	SC-120-83	Mach. Screw M4 X 0.7 X 6MM Flat Hd.	3
25	294956-1	Knife - Balk Knives 3/16 (Use with item 35)	1
26	294956-2	Knife - Balk Knives 7/32 (Use with item 36)	1
27	294956-3	Knife - Balk Knives 5/16 (Use with item 37)	1
28	294949	Knife - Balk 3/32 (Use with item 38)	1
29	SC-118-26	Mach. Screw M4 X 0.7 X 10MM Flat Hd.	AR
30	SC-120-83	Mach. Screw M4 X 0.7 X 6MM Flat Hd.	AR
31	294986	Plate Assy - Julienne 3/32 (Incls. items 28, 29, 38 & 39)	1
32	294987	Plate Assy - Julienne 3/16 (Incls. items 25, 30, 35 & 39)	1
33	294988	Plate Assy - Julienne 7/32 (Incls. items 26, 30, 36 & 39)	1
34	294989	Plate Assy -Plate Assy - Julienne 5/16 (Incls. items 27, 30, 37 & 39)	1
35	294968	Knife - Julienne 3/16 (Use with item 25)	AR
36	294968-2	Knife - Julienne 7/32 (Use with item 26)	AR
37	294968-3	Knife - Julienne 5/16 (Use with item 27)	AR
38	274317	Knife - Standard Slicer (Use with item 28 for 3/32 Julienne)	AR
39	SC-120-82	Mach. Screw M5 X 0.8 X 6MM	AR
40	435136	Frame (For 1/16, 3/32, 1/8, 3/16 & 7/32 Shredder Inserts)	1
41	435137	Frame (For 5/16 Shredder Inserts)	1
42	435184	Insert - 1/16 Shredder Plate	1
43	274320	Insert - 3/32 Shredder Plate	1
44	274409	Insert - 1/8 Shredder Plate	1
45	274343	Insert - 3/16 Shredder Plate	1
46	274410	Insert - 5/16 Shredder Plate	1
47	435185	Insert - 7/32 Shredder Plate	1
48	274411	Insert - Fine Grater	1
49	294963	Plate Assy - Fine Grater (Incls. items 40, 48 & 56)	1
50	294996	Plate Assy - Shredder 116 (Incls. items 40, 42 & 56)	1
51	294997	Plate Assy - Shredder 3/32 (Incls. items 40, 43 & 56)	1
52	294998	Plate Assy - Shredder 1/8 (Incls. items 40, 44 & 56)	1
53	294999	Plate Assy - Shredder 3/16 (Incls. items 40, 45 & 56)	1
54	294960	Plate Assy - Shredder 7/32 (Incls. items 40, 47 & 56)	1
55	294961	Plate Assy - Shredder 5/16 (Incls. items 41, 46 & 56)	1
56	SC-120-85	Mach. Screw M3 X 0.5 X 6MM Flat Hd.	AR
57	435163	Kit - Dicing Grid Knife 9/32	1
58	435164	Kit - Dicing Grid Knife 3/8	1
59	435165	Dicing Grid Kit 1/2	1
60	435841	Kit - Dicing Grid Knife 5/8	1
61	435842	Kit - Dicing Grid Knife 3/4	1
62	435843	Kit - Dicing Grid Knife 1	1
63	435116	Kit - French Fry Knife	1
	274372	Rack - Wall (Incls. Label)	1
	274329	Brush - Cleaning	1

© HOBART CORPORATION, 1989

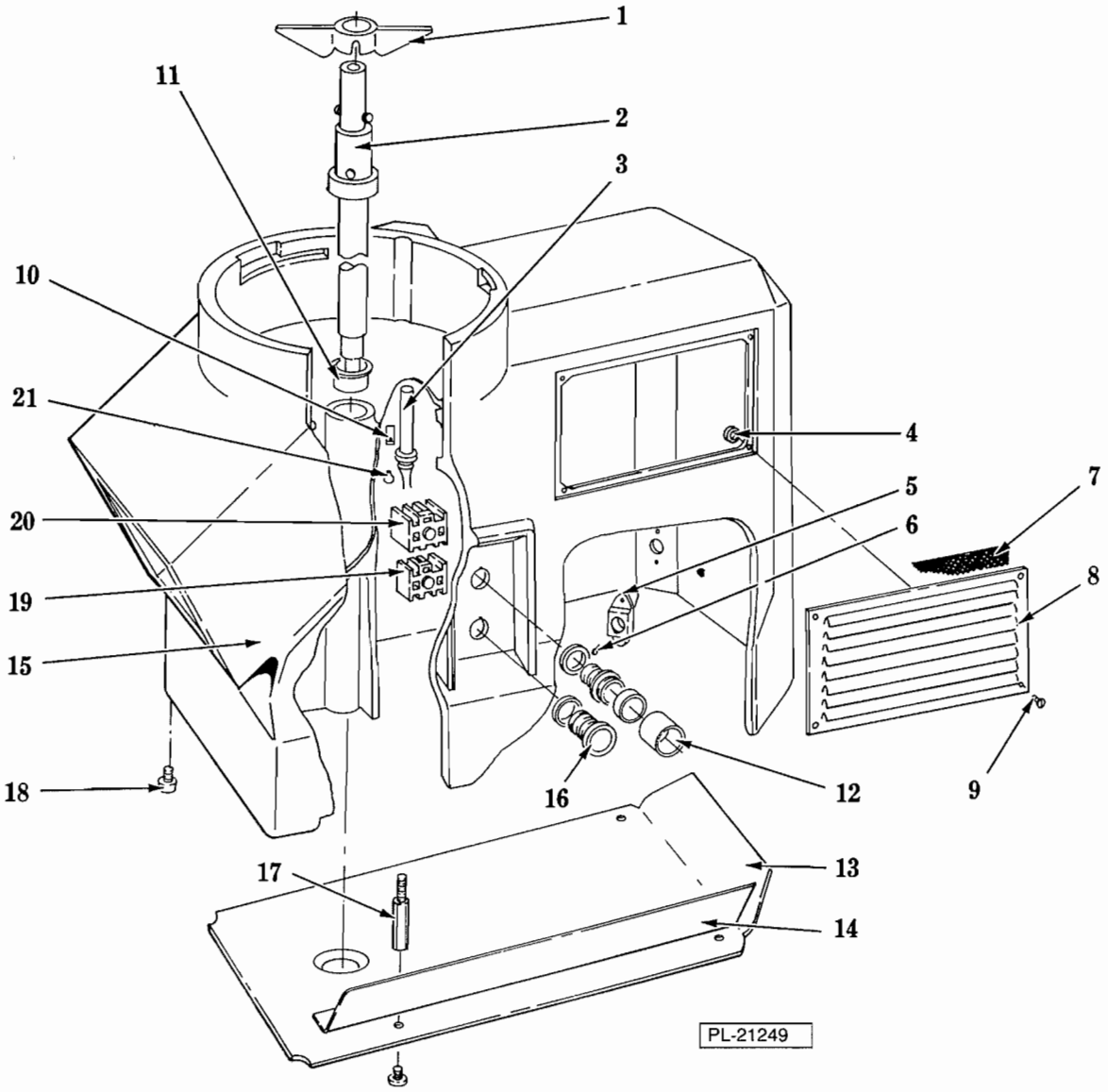

HOUSING
(FP200)

HOUSING (FP200)

ILLUS. PL-21249	PART NO.	NAME OF PART	AMT.
1	274871	Paddle - Agitator	1
2	274872	Knife Shaft Assy	1
3	274340	Switch - Magnetic	1
4	274825	Lockwasher	8
5	274826	Retainer - Cable	1
6	SC-121-19	Mach. Screw M4 X 16 Pan Hd.	2
7	274850	Net	2
8	274828	Louver	2
9	RS-32-95	Rivet - M3 X 12	8
10	274874	Bracket	1
11	274873	Bushing	1
12	274827	Push Button - On	1
13	274845	Plate - Protection	1
14	274851	Strip - Ventilator	2
15	274879	Machine Housing Assy	1
16	274830	Push Button - Off	1
17	274824	Screw - Distance	4
18	435807	Foot	6
19	274877	Block - Contact DA-01-0	1
20	274876	Block - Contact DA-10-1	1
21	SC-121-18	Mach. Screw M4 X 8 Pan Hd.	1
	435124	Shim 3/4" X .002" - Knife Shaft (Use with item 2)	AR
	435125	Shim 3/4" X .004" - Knife Shaft (Use with item 2)	AR
	435126	Shim - 1 3/8" X .004" - Knife Shaft (Use with item 2)	AR
	435127	Shim - 1 3/8" X .008 - Knife Shaft (Use with item 2)	AR

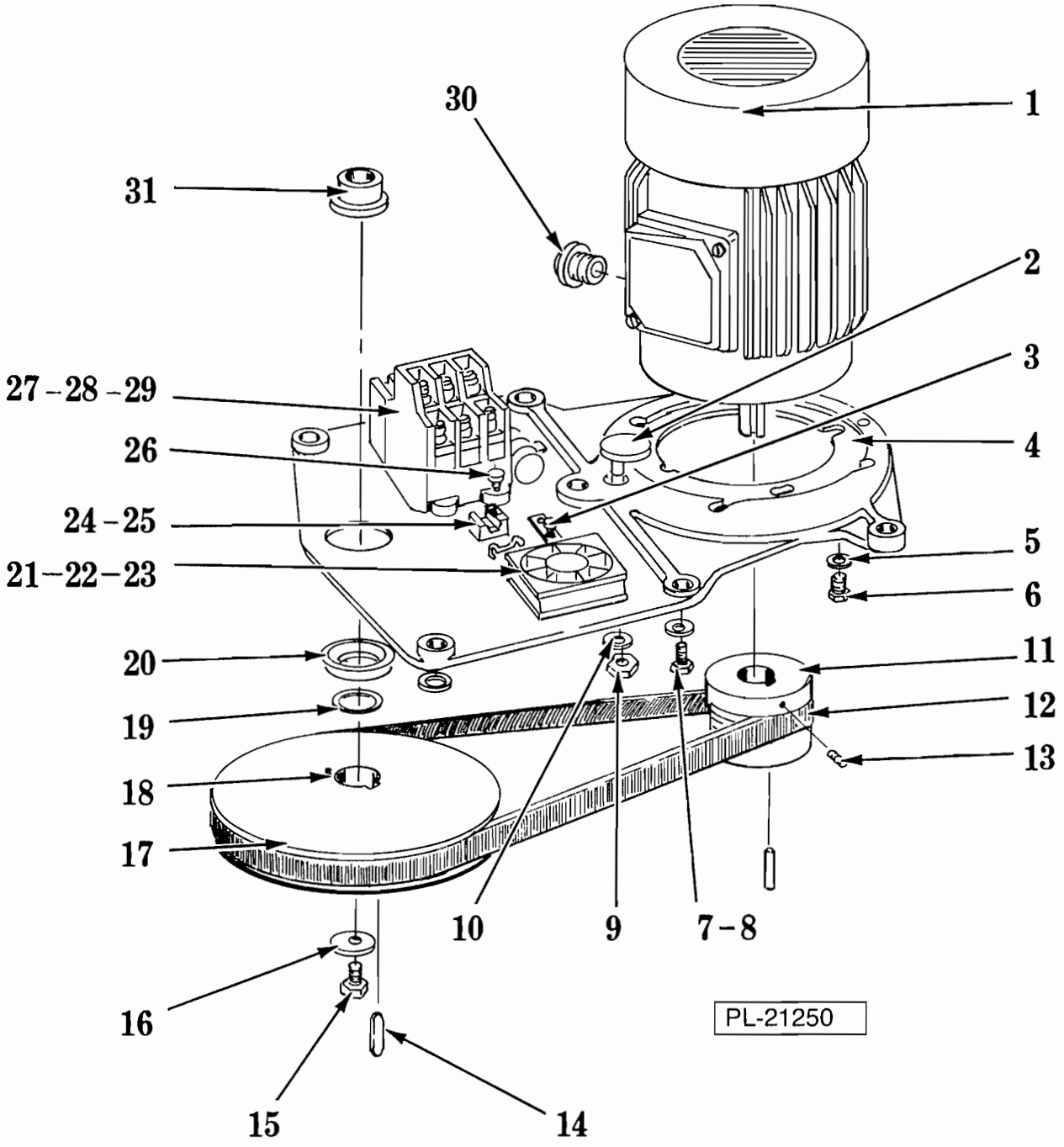
30
1
31
2
3
27-28-29
4
26
24-25
5
21-22-23
6
20
11
19
12
18
13
17
10
9
7-8
16
PL-21250
15
14

MOTOR
(FP200)

MOTOR (FP200)

ILLUS. PL-21250	PART NO.	NAME OF PART	AMT.
1	274832	Motor 110/120/1/60	1
2	274882	Device - V-Belt Tension	1
3	274865	Plate - Ground	2
4	274833	Plate - Motor (UL Listed)	1
5	WS-30-46	Washer 10.5 X 22	4
6	SC-121-17	Cap Screw M10 X 20 Hex Hd.	4
7	SC-121-16	Cap Screw M8 X 22 Hex Hd.	2
8	WS-30-44	Washer 8.4 X 16	6
9	NS-47-50	Nut M6	1
10	WS-30-46	Washer 10.5 X 22	1
11	274843	Pulley - Motor (1 Ph., 60 hz.)	1
12	274870	V-Belt - Poly	1
13	SC-121-12	Set Screw M5 X 12 Soc. Hdls. Cup Pt.	1
14	274823	Key R5 X 5 X 25	1
15	SC-121-15	Cap Screw M8 X 16 Hex Hd.	1
16	WS-30-45	Washer BRB 8.4 X 24	1
17	274869	Pulley - Knife Shaft	1
18	274868	Pin - Fixing CP 3 X 16	1
19	274867	Spring - Cup	1
20	274866	Washer - Bearing	1
21	274847	Fan	1
22	SC-121-13	Mach. Screw M4 X 8 Flat Hd.	3
23	SC-121-14	Mach. Screw M4 X 20 Flat Hd.	1
24	274864	Bearer - Cable	4
25	SC-121-18	Mach. Screw M4 X 8 Pan Hd.	2
26	SC-118-28	Mach. Screw M4 X 12 Pan Hd.	2
27	274883	Contactor 110 V	1
28	274344	Circuit - RC 110 V	1
29	274820	Relay - Overload 110 V	1
30	274881	Nipple - Cable 22.5	1
31	274873	Bushing	1
	274817	Capacitor - Motor 110 V	1
	294972	Gasket - Capacitor	1

The following parts are available for service of Non Hobart Food Processors that operate on 220 V. 3 Ph.

Item	Part No.	Description
1	274831	Motor 220 V., 60 Hz., 3 Ph.
4	435114	Plate - Motor (220 V.)
5	WS30-43	Washer
6	SC110-43	Screw
11	274842	Pulley - Motor (220 V.)
27	274819	Contactor (230 V.)
28	274860	Circuit - R.C. (220 V.)
29	274858	Relay - Overload (220 V.)
	274218	Capacitor - Motor 220 V.
	294972	Gasket - Capacitor

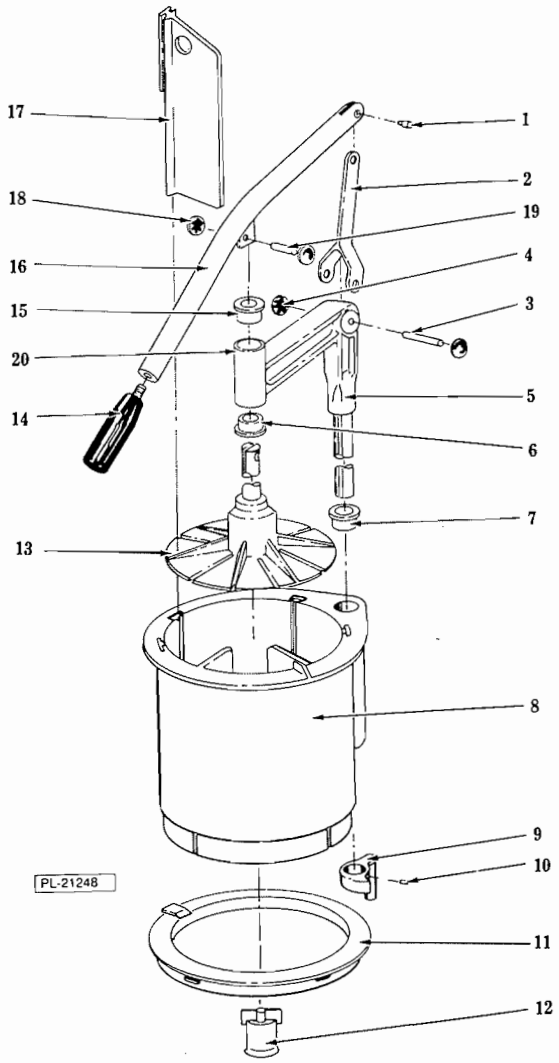

FEED HEADS
(FP200)

ILLUS. PL-21248	PART NO.	NAME OF PART	AMT.
1	274798	Screw - Link	1
2	274799	Link	1
3	274800	Rod - Pivot	1
4	274801	Lockwasher With Cap	1
5	274802	Stand & Shaft	1
6	274794	Bushing	1
7	274794	Bushing	1
8	274803	Feed Cylinder Assy	1
9	274804	Stopper Assy	1
10	SC-121-11	Set Screw M5 X 5	2
11	274806	Ring - Lock	1
12	274807	Locking Cap	1
13	274797	Piston Assy	1
14	274796	Handle 80-M10 X 16	1
15	274794	Bushing	1
16	274795	Lever	1
17	274793	Partition Wall	2
18	274801	Lockwasher With Cap	1
19	435112	Rod - Pivot	1
20	435113	Bushing - Center	1