HOBART

CATALOG OF REPLACEMENT PARTS

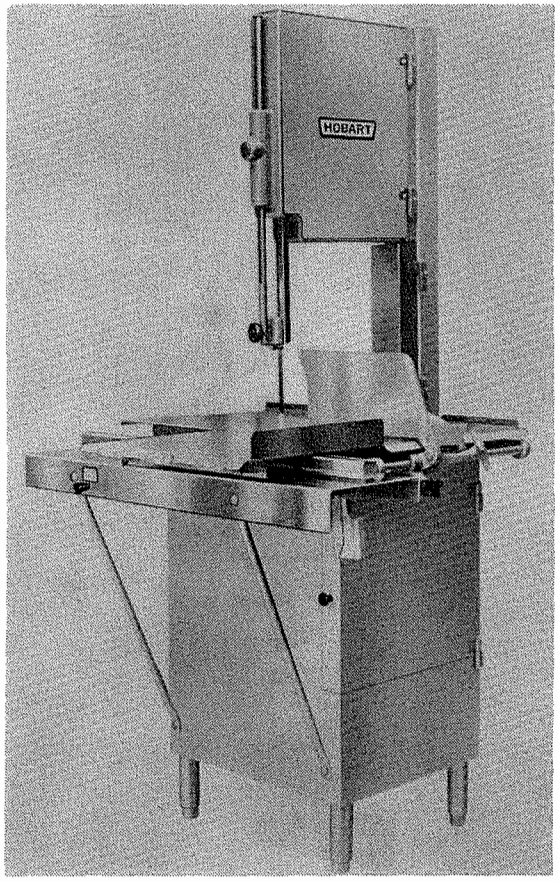

MODEL 5614 MEAT SAW

ML-19553 5614

(Starting Serial Number 27-128-712)

A product of HOBART CORPORATION TROY, OHIO 45374

FORM 16827 (12-88)

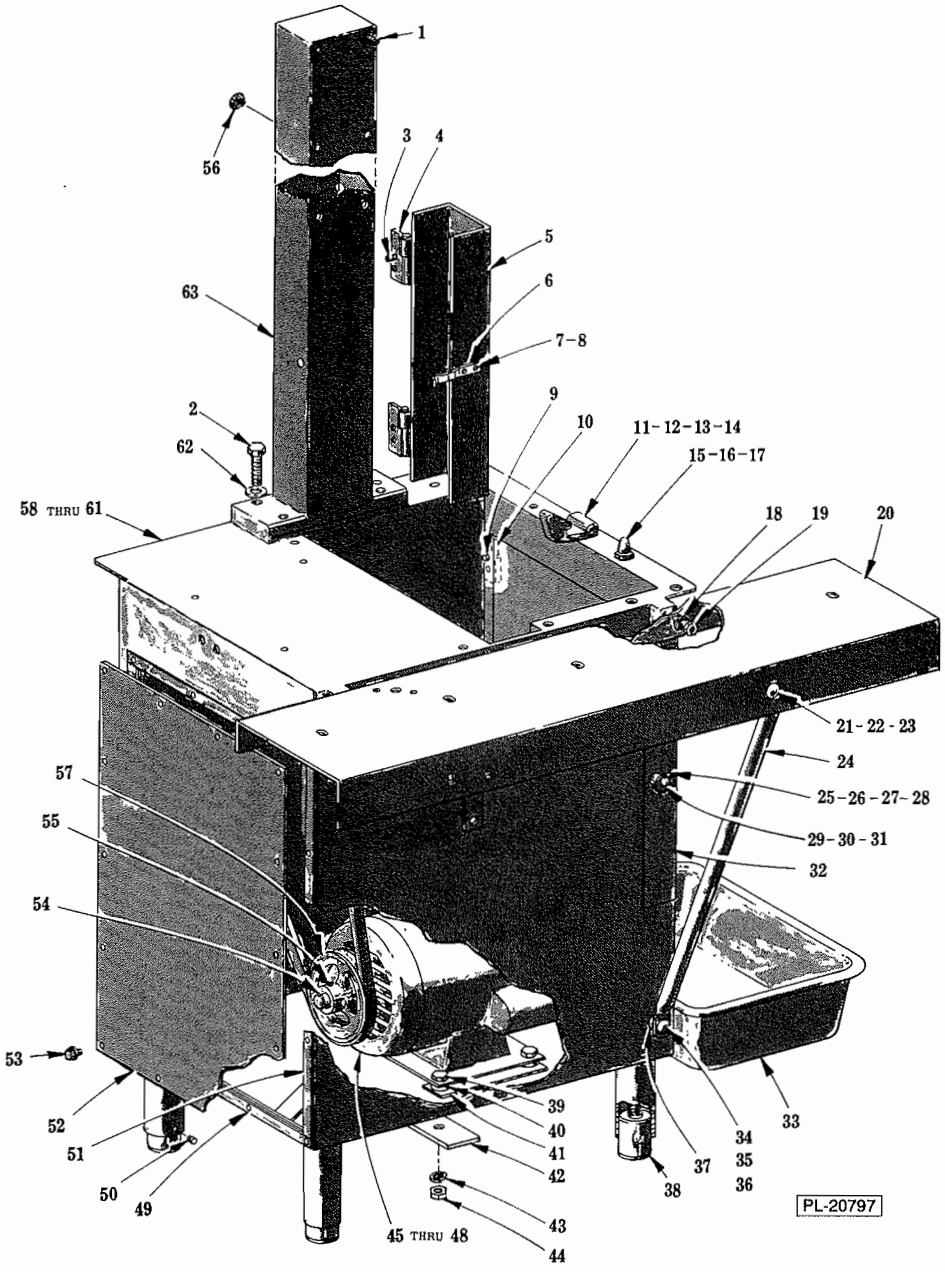
1
56
3
4
5
63
6
7-8
9
2
10
11-12-13-14
62
15-16-17
58 THRU 61
18
19
20
21-22-23
24
57
25-26-27-28
55
29-30-31
32
54
53
39
52
40
33
41
34
51
35
42
37
36
50
38
49
43
45 THRU 48
44
PL-20797

BASE UNIT

BASE UNIT

ILLUS. PL-20797	PART NO.	NAME OF PART[33]	AMT.
1	SD-33-62	Self-Tapping Screw 3/8-16 x 3/4 Soc. Hd., Type TT	8
2	SC-110-11	Cap Screw 1/2-13 x 1 1/2 Hex Hd. "Nylok"	4
3	SD-24-29	Self-Tapping Screw 10-32 x 3/4 Phil. Flat Hd. "Taptite"	4
4	78917	Bracket - Hinge	2
5	122374-2	Blade Cover Assy	1
6	68176	Clip - Spring	1
7	SC-53-1	Mach. Screw 10-24 x 1/4 Truss Hd	2
8	WL-8-13	Lock Washer 10 Int. Shakeproof	2
9	SD-24-29	Self-Tapping Screw 10-32 x 3/4 Phil. Flat Hd. "Taptite"	4
10	78917	Bracket - Hinge	2
11	102359	Clamp - Stationary Table	1
12	SC-62-59	Cap Screw 5/16-18 x 5/8 Hex Hd	2
13	WS-17-16	Washer	2
14	WL-3-47	Lock Washer 5/16 Medium	2
15	124328	Rest - Table	4
16	SC-62-53	Cap Screw 1/4-20 x 1/2 Hex Hd	4
17	WL-3-38	Lock Washer 1/4 Medium	4
18	WL-4-4	Lock Washer 3/8 Light	2
19	SC-62-43	Cap Screw 3/8-16 x 3/4 Hex Hd	2
20	290665-2	Carriage Support Assy. (SST Mach.)	1
21	SC-82-38	Carriage Bolt 3/8-16 x 1	2
22	WL-4-4	Lock Washer 3/8 Light	2
23	NS-13-25	Full Nut 3/8-16 Hex Fin	2
24	78993-2	Brace - Carriage Support (SST Mach.)	2
25	SC-8-9	Mach. Screw 10-24 x 3/8 Rd. Hd	1
26	NS-9-22	Mach. Nut 10-24 Hex	1
27	68176	Clip - Spring	1
28	WL-13-11	Lock Washer 10 Int. Shakeproof	1
29	120039	Knob - Base Door	1
30	SC-8-9	Mach. Screw 10-24 x 3/8 Rd. Hd	1
31	WL-13-11	Lock Washer 10 Int. Shakeproof	1
32	102380-2	Base Door Assy. (SST Mach.)	1
33	104075	Pan - Meat Scrap	1
34	SC-82-38	Carriage Bolt 3/8-16 x 1	2
35	WL-4-4	Lock Washer 3/8 Light	2
36	NS-13-25	Full Nut 3/8-16 Hex Fin	2
37	74888-2	Washer - Shim (SST Mach.)	2
38	290349	Foot & Insert Assy	4
39	SC-37-74	Cap Screw 3/8-16 x 1 1/2 Hex Hd	4
40	74888-1	Washer - Shim	4
41	122706	Booster - Motor	AR
42	119810-3	Reinforcement - Base (SST Mach.)	2
43	WL-4-4	Lock Washer 3/8 Light	4
44	NS-13-25	Full Nut 3/8-16 Hex Fin	4
45	278201-1	Motor (115/200-230 V., 60 Hz., 1 Ph.) (1725 R.P.M.) (Incls. item 54)	1
46	294121	Motor (200-230/460 V., 60 Hz., 3 Ph.) (1725 R.P.M.) (Incls. item 54)	1
47	118298-2	Motor (115/220-240 V., 50 Hz., 1 Ph.) (1425 R.P.M.) (Incls. item 54)	1
48	294413	Motor (220-240/380-415 V., 50 Hz., 3 Ph.) (1425 R.P.M.) (Incls. item 54)	1
49	103193	Gasket (Short)	2
50	SC-111-5	Set Screw 1/4-20 x 1/4 Hdls., Cup Pt. "Nylok"	4
51	103192	Gasket (Long)	2
52	110386-2	Motor Access Panel & Gasket Assy. (SST Mach.) (Incls. items 49 & 51)	1
53	SD-32-15	Self-Tapping Screw 10-32 x 3/8 Hex Washer Hd. "Taptite"	14
54	12430-91	Key	1
55	SC-47-32	Set Screw 5/16-18 x 5/16 Soc. Hdls., Cup Pt	1
56	PB-3-6	Plug Button (SST Mach.)	8
57	119949-2	"V" Pulley - Motor (5.95" O.D.) (Incls. item 55)	1
58	122395	Base Assy. (SST Mach.) (Incls. items 9 & 10)	1
59	118544-1	Lug - Solderless	1
60	WL-13-11	Lock Washer 10 Int. Shakeproof	2
61	NS-11-18	Mach. Nut 10-24 Hex	2
62	WS-8-48	Washer	4
63	122373-4	Column Assy. (SST Mach.) (Incls. items 3 & 4)	1

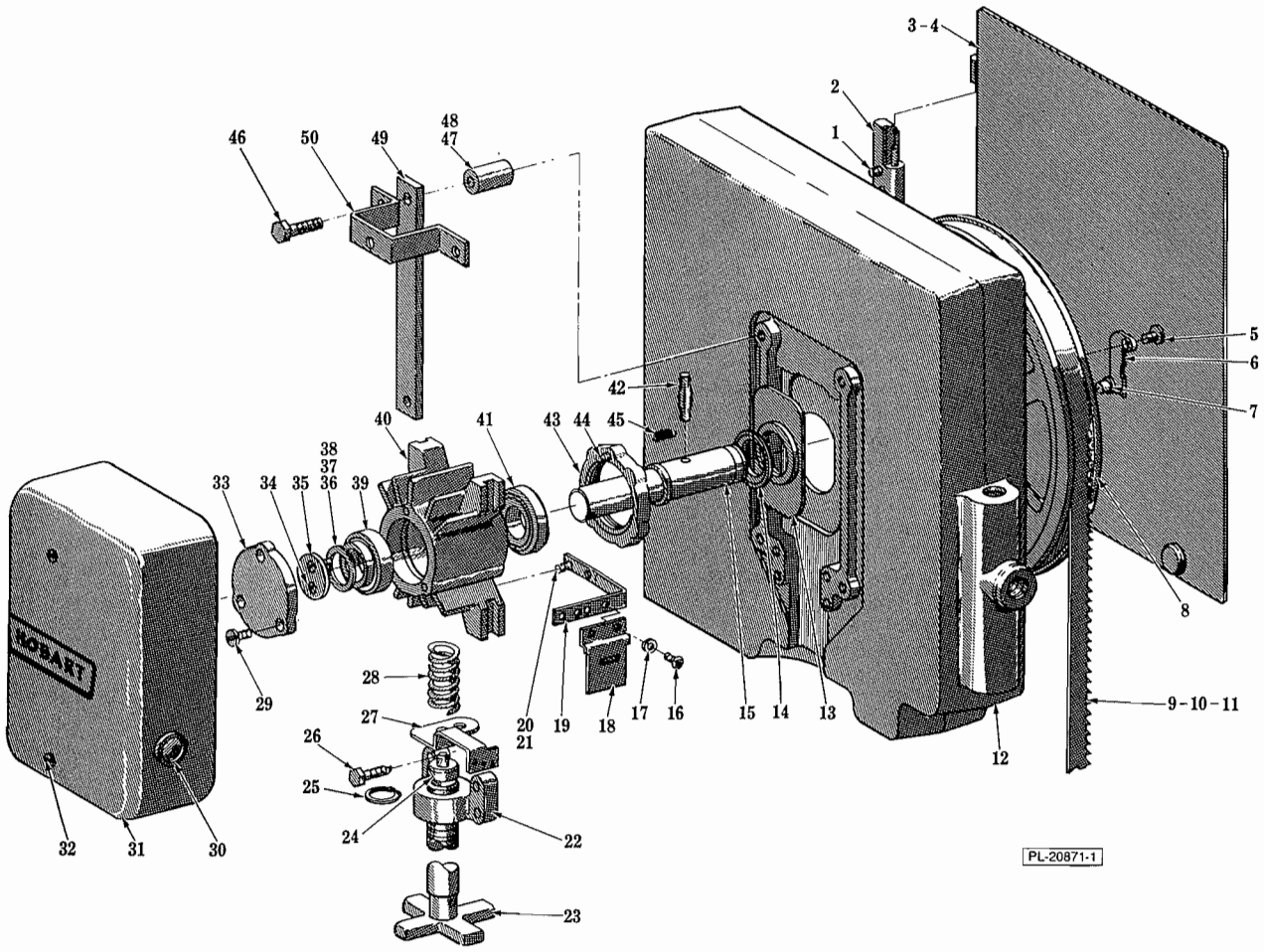
3-4
2
1
48
47
46
50
49
5
6
7
42
40
41
43
44
45
38
37
33
34
35
36
39
8
29
28
27
26
25
24
22
20
21
19
18
17
16
15
14
13
9-10-11
12
32
31
30
23
PL-20871-1

HEAD UNIT

HEAD UNIT

ILLUS. PL-20871-1	PART NO.	NAME OF PART[33]	AMT.
1	SC-20-15	Mach. Screw 10-24 × 7/8 Phil. Flat Hd	4
2	78917	Bracket - Hinge	2
3	122505-1	Door Assy. (Head) (60 Hz.)	1
4	122505-2	Door Assy. (Head) (50 Hz.)	1
5	20851	Screw - Latch	1
6	20852	Latch	1
7	79686	Catch - Friction	1
8	108224-2	Flanged Pulley (Blade) Assy. (Incls. items 5, 6 & 7)	1
9	124445-1	Blade - Meat Saw (.020" - 4T) (Standard)	1
10	124445-2	Blade - Meat Saw (.020" - 3T) (Frozen Beef/Fish)	1
11	124445-3	Blade - Meat Saw (.014" - 3T) (Frozen Fish)	1
12	102526-8	Head & Magnetic Catch Assy	1
13	293501	Shield - Bearing Carrier	1
14	293502	Seal	1
15	108226	Shaft - Upper Bearing Carrier	1
16	SC-7-71	Mach. Screw 10-24 × 1/4 Rd. Hd	2
17	WL-3-22	Lock Washer 10 Light	2
18	67249	Plate - Blade Tension Sight	1
19	75817	Bracket - Tension Indicator	1
20	SC-90-45	Cap Screw 10-24 × 3/8 Hex Hd	2
21	WL-3-22	Lock Washer 10 Light	2
22	75897	Nut - Blade Tension Adjusting	1
23	120469-2	Hand Wheel & Screw Assy	1
24	BB-13-1	Thrust Bearing - Nice 603	1
25	RR-4-8	Retaining Ring	1
26	SD-33-66	Self-Tapping Screw 5/16-18 × 1 1/4 Hex Washer Hd., Type TT	4
27	75816	Indicator - Tension	1
28	20867	Spring - Adj. Blade Tension	1
29	SC-12-69	Mach. Screw 1/4-20 × 1/2 Fil. Hd	3
30	75656	Window Unit	1
31	120830	Cover & Window Assy. (Incls. item 30)	1
32	SD-31-1	Self-Tapping Screw 10-24 × 5/8 Truss Hd. "Taptite"	2
33	67210	Cap - Upper Bearing Carrier	1
34	SC-99-4	Cap Screw 10-24 × 1/2 Flat Hd. "Eslok"	2
35	67241	Retainer - Bearing	1
36	103036-1	Washer - Shim (.002" Thk.)	AR
37	103036-2	Washer - Shim (.005" Thk.)	AR
38	103036-3	Washer - Shim (.008" Thk.)	AR
39	BR-2-27	Roller Bearing - Cone & Cup Assy	1
40	103022	Carrier - Upper Bearing	1
41	BR-2-27	Roller Bearing - Cone & Cup Assy	1
42	110551	Groov-Pin - Special	1
43	103029	Cap - Upper Bearing Carrier (Pulley)	1
44	SC-12-69	Mach. Screw 1/4-20 × 1/2 Fil. Hd	3
45	75837	Spring - Detent	2
46	SD-33-60	Self-Tapping Screw 3/8-16 × 1 7/8 Hex Washer Hd. Type TT	4
47	123176-1	Spacer - Bearing Carrier (Upper)	2
48	123176-4	Spacer - Bearing Carrier (Lower)	2
49	67187	Gib - Upper Bearing Carrier	2
50	67147	Cover Bracket & Weld Nut Assy	2
	108227	Upper Bearing Carrier Assy. (Incls. items 13 thru 15, 29 & 33 thru 45)	1

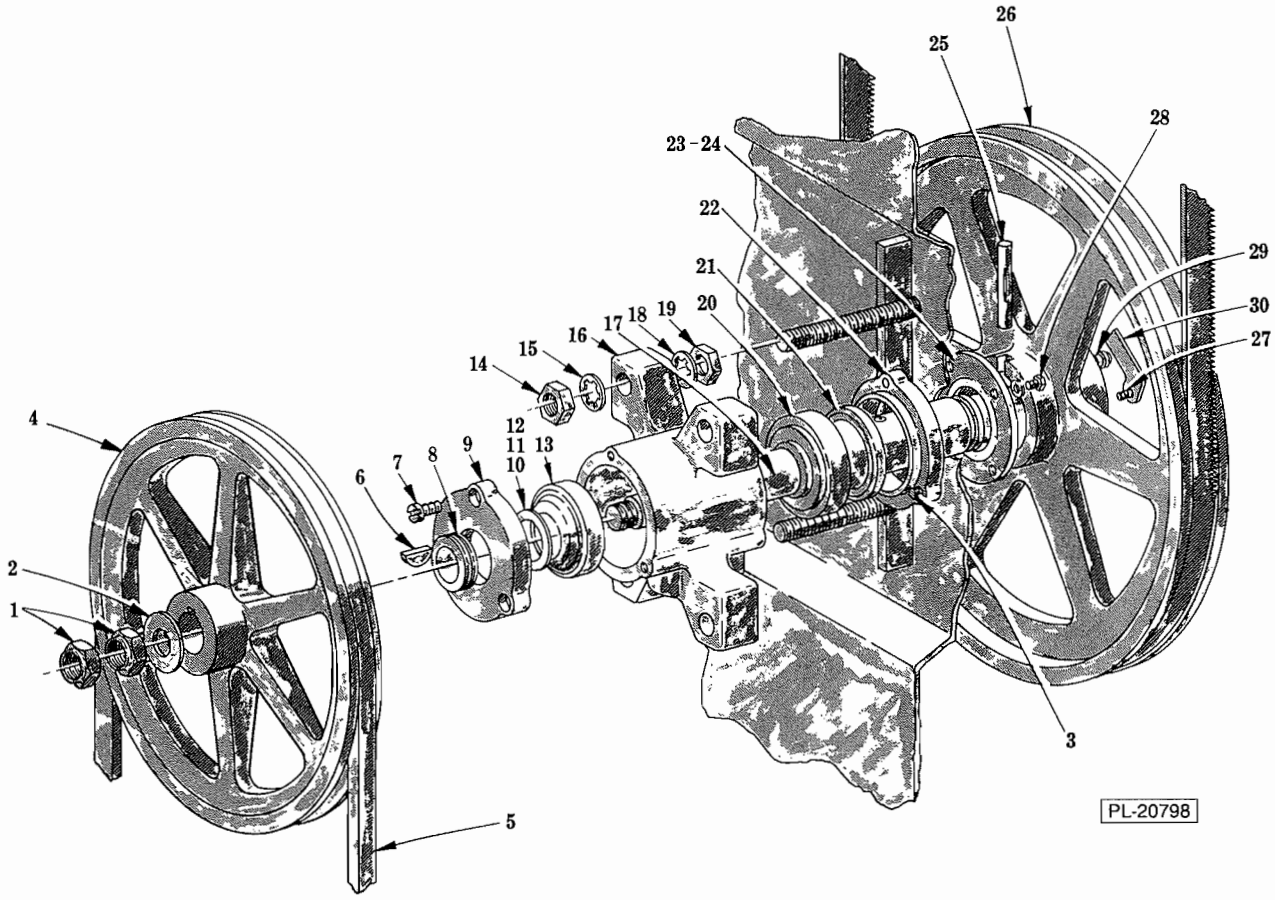

LOWER BEARING CARRIER UNIT

LOWER BEARING CARRIER UNIT

ILLUS. PL-20798	PART NO.	NAME OF PART33	AMT.
1	NS-31-43	Stop Nut ¾-16 "Elastic"	2
2	WS-29-12	Washer	1
3	SC-12-69	Mach. Screw ¼-20 × ½ Fil. Hd	3
4	119950	"V" Pulley - Bearing Carrier (9.8" O.D.) (1425 R.P.M. Motor)	1
5	120273-1	"V" Belt (1425 & 1725 R.P.M. Motor) (50/60 Hz.)	1
6	KW-3-15	Key - #807 Woodruff	1
7	SC-12-69	Mach. Screw ¼-20 × ½ Fil. Hd	3
8	114560	Conveyor - Lower Bearing Carrier Grease	1
9	114561	Cap - Lower Bearing Carrier ("V" Belt Side)	1
10	123192-1	Washer - Shim (.002" Thk.)	AR
11	123192-2	Washer - Shim (.005" Thk.)	AR
12	123192-3	Washer - Shim (.008" Thk.)	AR
13	BR-2-27	Roller Bearing - Cone & Cup Assy	1
14	NS-13-30	Full Nut ½-13 Hex Fin	4
15	WL-8-31	Lock Washer ½ Int. Shakeproof	4
16	114562	Carrier - Lower Bearing	1
17	119851	Shaft - Lower Bearing Carrier	1
18	WL-8-31	Lock Washer - ½ Int. Shakeproof	4
19	NS-13-30	Full Nut ½-13 Hex Fin	4
20	BR-2-20	Roller Bearing - Cone & Cup Assy	1
21	71403	Seal - Grease	1
22	77319	Bearing Cap & Seal Assy. (Incls. item 21)	1
23	77510-2	Washer & Seal Assy. (Incls. item 24)	1
24	77511	Seal - Diaphragm	1
25	110551	Groov-Pin - Special	1
26	108224-2	Flange Pulley (Blade) Assy. (Incls. items 27, 29 & 30)	1
27	20851	Screw - Latch	1
28	SD-32-15	Self-Tapping Screw 10-32 × ⅜ Hex Washer Hd., Type TT	4
29	79686	Catch - Friction	1
30	20852	Latch	1
	117022-3	Lower Bearing Carrier Assy. (Incls. items 3, 7 thru 13, 16, 17, 20 & 22)	1

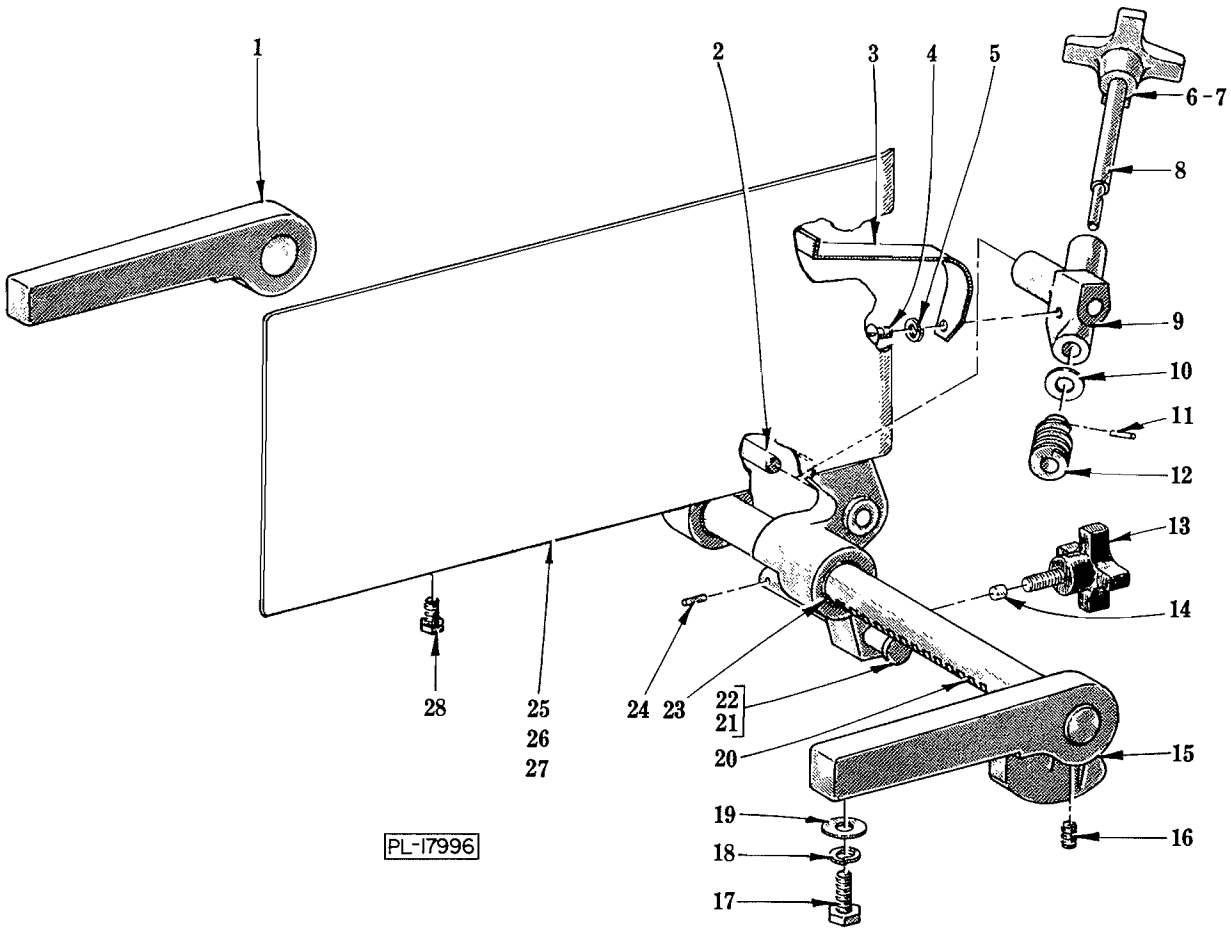

GAUGE PLATE UNIT

GAUGE PLATE UNIT

ILLUS. PL-17996	PART NO.	NAME OF PART[33]	AMT.
1	77958-2	Bracket - Gauge Plate Support (Rear)	1
2	77235	Pin	1
3	77848	Spring - Gauge Plate	1
4	SC-21-14	Mach. Screw 8-32 × 3/8 Rd. Hd	1
5	WL-6-1	Lock Washer 8 Light	1
6	118551	Knob	1
7	SC-111-5	Set Screw 1/4-20 × 1/4 Soc. Hdls., Cup Pt. "Nylok"	1
8	77843	Shaft - Worm	1
9	83481	Worm Bracket & Bearing Assy	1
10	WS-18-36	Washer	1
11	PG-7-7	Groov-Pin - Type 5, 1/8 × 7/16	1
12	20887	Worm	1
13	118958-1	Knob - Positioning	1
14	78920	Slug	1
15	78915-2	Bracket - Gauge Plate Support (Front)	1
16	SC-103-10	Set Screw 5/16-18 × 3/4 Soc. Hdls., Cup Pt. "Unbrako/Loc-well"	2
17	SC-62-44	Cap Screw 5/16-18 × 3/4 Hex Hd	4
18	WL-3-47	Lock Washer 5/16 Medium	4
19	WS-17-16	Washer	4
20	77841-1	Rack - Gauge Plate	1
21	85397	Gauging Pin	1
22	WS-18-36	Washer	1
23	74424	Bushing - Gauge Plate	2
24	PG-11-2	Groov-Pin - Type #5, 7/64 × 1/2	1
25	120136-2	Gauge Plate Assy. (SST) (USDA)	1
26	120138	Arm & Bushing Assy. (SST) (USDA) (Incls. item 23 & 28)	1
27	NS-25-4	Acorn Nut 1/4-20	6
28	79155	Cap Screw Bolt (Special)	1
	120139-2	Gauge Plate Assy. (SST) (USDA) (Incls. items 2 thru 14 & 21 thru 28)	1
	124056-1	Gauge Plate Assy. (SST) (USDA) (Incls. items 25, 26 & 27)	1
	77846	Worm Bracket Assy. (Incls. items 3 thru 12)	1

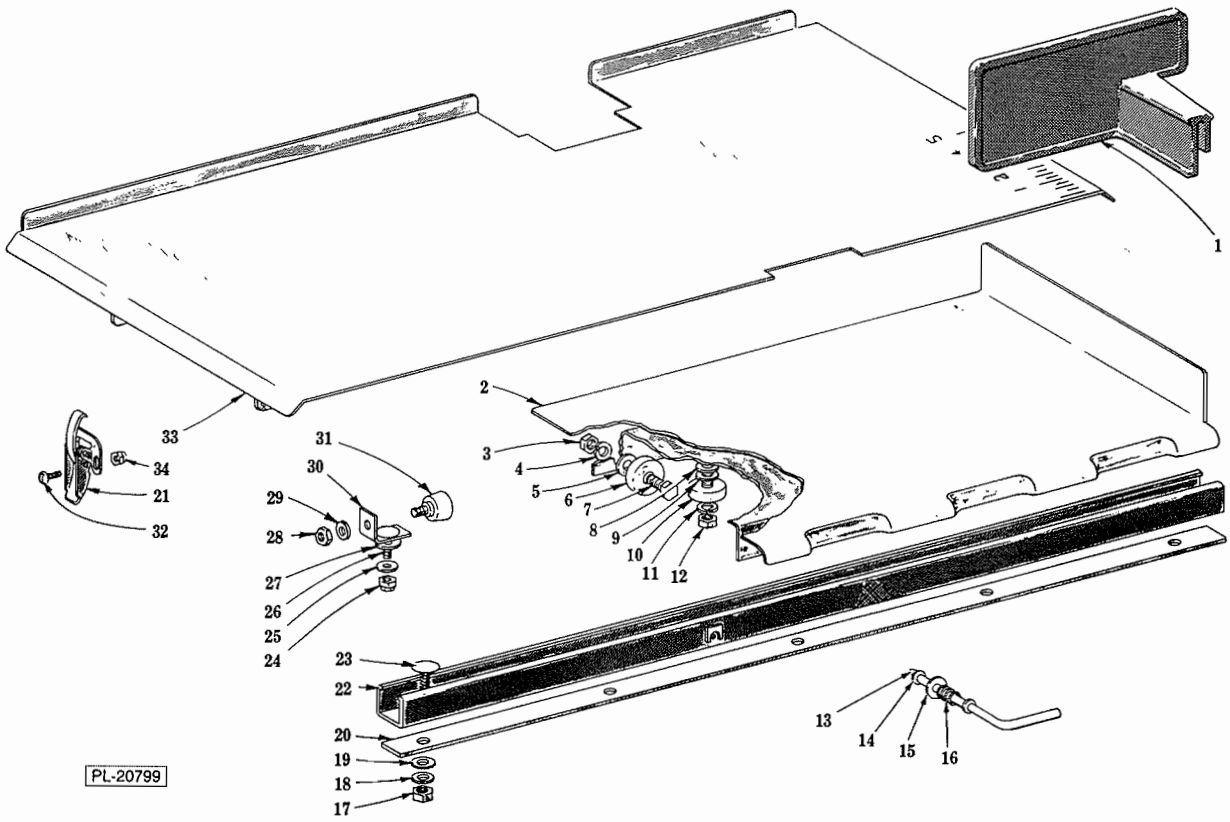

TABLE, CARRIAGE AND TRACK UNIT

TABLE, CARRIAGE AND TRACK UNIT

ILLUS. PL-20799	PART NO.	NAME OF PART33	AMT.
1	291435	Pusher Plate Assy	1
2	124059	Carriage Assy	1
3	NS-13-25	Full Nut 3/8-16 Hex Fin	4
4	WL-4-4	Lock Washer 3/8 Light	4
5	WS-18-5	Washer	4
6	BB-8-11	Ball Bearing - Nice #SK-T2198	4
7	SC-37-73	Cap Screw 3/8-16 x 1 Hex Hd	4
8	WS-18-14	Washer (3/64" Thk.)	2
9	WS-18-34	Washer (.010" Thk.)	AR
10	BB-8-11	Ball Bearing - Nice #SK-T2198	2
11	WL-4-4	Lock Washer 3/8 Light	2
12	NS-13-25	Full Nut 3/8-16 Hex Fin	2
13	123347	Bar - Carriage Lock	1
14	RR-11-9	Retaining Ring	3
15	WS-17-8	Washer	1
16	123343	Spring - Carriage Locking	1
17	NS-15-11	Full Nut 5/16-18 Hex Fin	5
18	WL-6-23	Lock Washer 5/16 Medium	5
19	WS-17-21	Washer	5
20	78994-2	Spacer	1
21	67319	Clamp - Table	1
22	78990-4	Carriage Guide Assy. (SST Mach.)	1
23	SC-94-20	Carriage Bolt 5/16-18 x 1	5
24	NS-31-29	Stop Nut 5/16-18 "Elastic"	2
25	70087	Washer - Spring	2
26	SC-94-20	Carriage Bolt 5/16-18 x 1	2
27	WS-18-34	Washer	2
28	NS-15-11	Full Nut 5/16-18 Hex Fin	2
29	WS-17-21	Washer	2
30	119827	Stop - Carriage	2
31	18682-2	Bumper - Carriage Stop	2
32	SC-10-36	Mach. Screw 10-24 x 5/8 Truss Hd	2
33	102348-2	Table Assy. (SST Mach.)	1
34	NS-31-10	Stop Nut 10-24 "Elastic"	2
	124064-1	Carriage Unit Assy. (Incls. items 2 thru 16)	1
	291092	Bumper Stop Assy. (Incls. items 28, 29, 30 & 31)	2

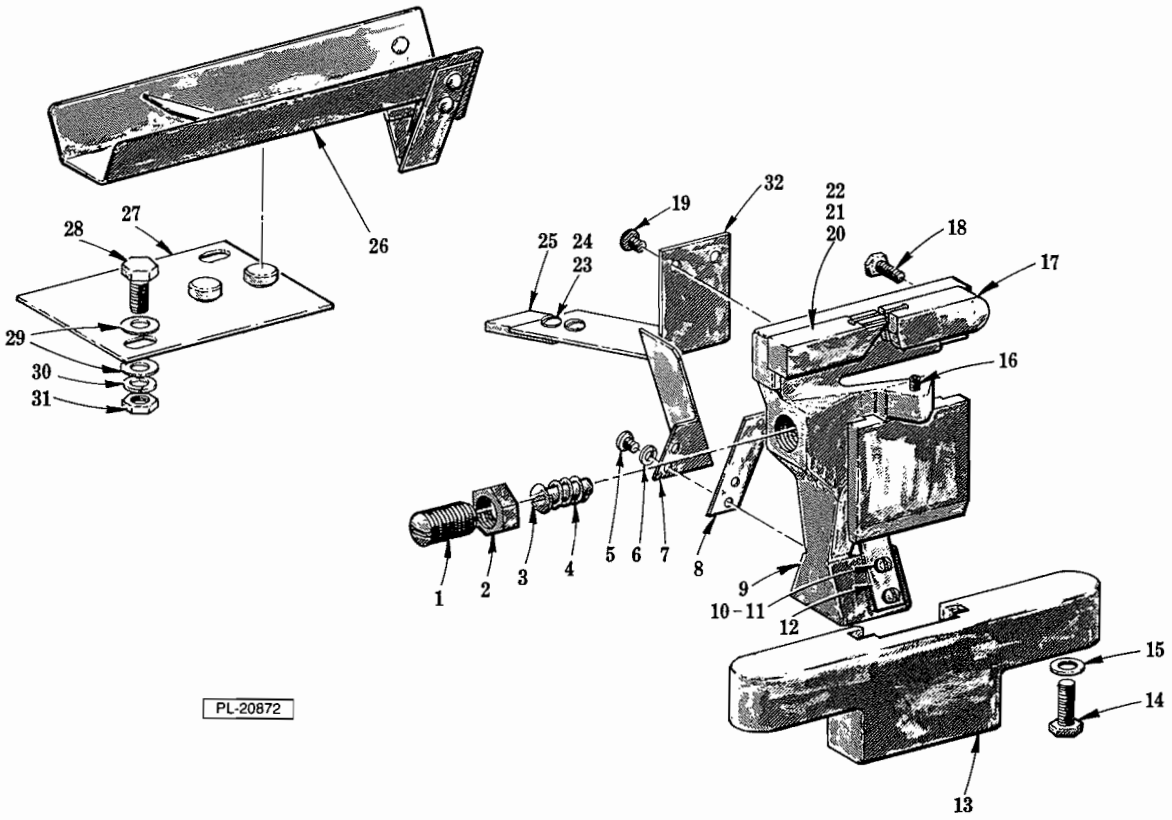

LOWER GUIDE AND WIPER UNIT

LOWER GUIDE AND WIPER UNIT

ILLUS. PL-20872	PART NO.	NAME OF PART33	AMT.
1	SC-49-22	Set Screw 9/16-18 x 7/8 Hdls., Flat Pt	1
2	NS-18-33	Jam Nut 9/16-18 Hex Fin	1
3	101924	Blade Back Up Block Assy	1
4	101925	Spring - Back Up Block	1
5	SC-21-85	Mach. Screw 8-32 x 3/8 Rd. Hd	2
6	WL-6-2	Lock Washer 8 Medium	2
7	121168	Deflector - Scrap	1
8	121170	Scraper - Blade	1
9	121660	Lower Wiper Support & Bushing Assy	1
10	WL-6-2	Lock Washer 8 Medium	2
11	SC-21-85	Mach. Screw 8-32 x 3/16 Rd. Hd	2
12	121170	Scraper - Blade	1
13	121162	Slideway - Front Wiper	1
14	SC-37-75	Cap Screw 5/16-18 x 3/4 Hex Hd	2
15	WS-17-16	Washer	2
16	SC-109-84	Set Screw 10-24 x 5/8 Soc. Hdls., Flat Pt	1
17	102653	Guard - Saw Blade	1
18	SC-41-61	Cap Screw 1/4-28 x 3/4 Hex Hd	2
19	SD-15-3	Self-Tapping Screw 10-24 x 1/4 Pan Hd. "Taptite"	2
20	109142-2	Guide - Saw Blade (.014" Blade)	1
21	109142-3	Guide - Saw Blade (.038" Blade)	1
22	109142-1	Guide - Saw Blade (.020" Blade) (Standard)	1
23	WS-23-34	Washer	2
24	SC-53-1	Mach. Screw 10-24 x 1/4 Truss Hd	2
25	123886	Wiper - Pulley	1
26	124266	Rear Wiper Assy	1
27	121158	Rear Wiper Base Assy	1
28	SC-62-54	Cap Screw 1/4-20 x 3/4 Hex Hd	2
29	WS-3-45	Washer	4
30	WL-3-38	Lock Washer 1/4 Medium	2
31	NS-13-2	Full Nut 1/4-20 Hex Fin	2
32	123809-1	Spring - Pulley Wiper	1
	123846-1	Lower Guide & Wiper Assy. (.020" Blade) (Incls. items 1 thru 12 & 16, 17, 18, 19, 22, 23, 24, 25 & 32)	1
	123846-2	Lower Guide & Wiper Assy. (.014" Blade) (Incls. items 1 thru 12 & 16, 17, 18, 19, 20, 23, 24, 25 & 32)	1

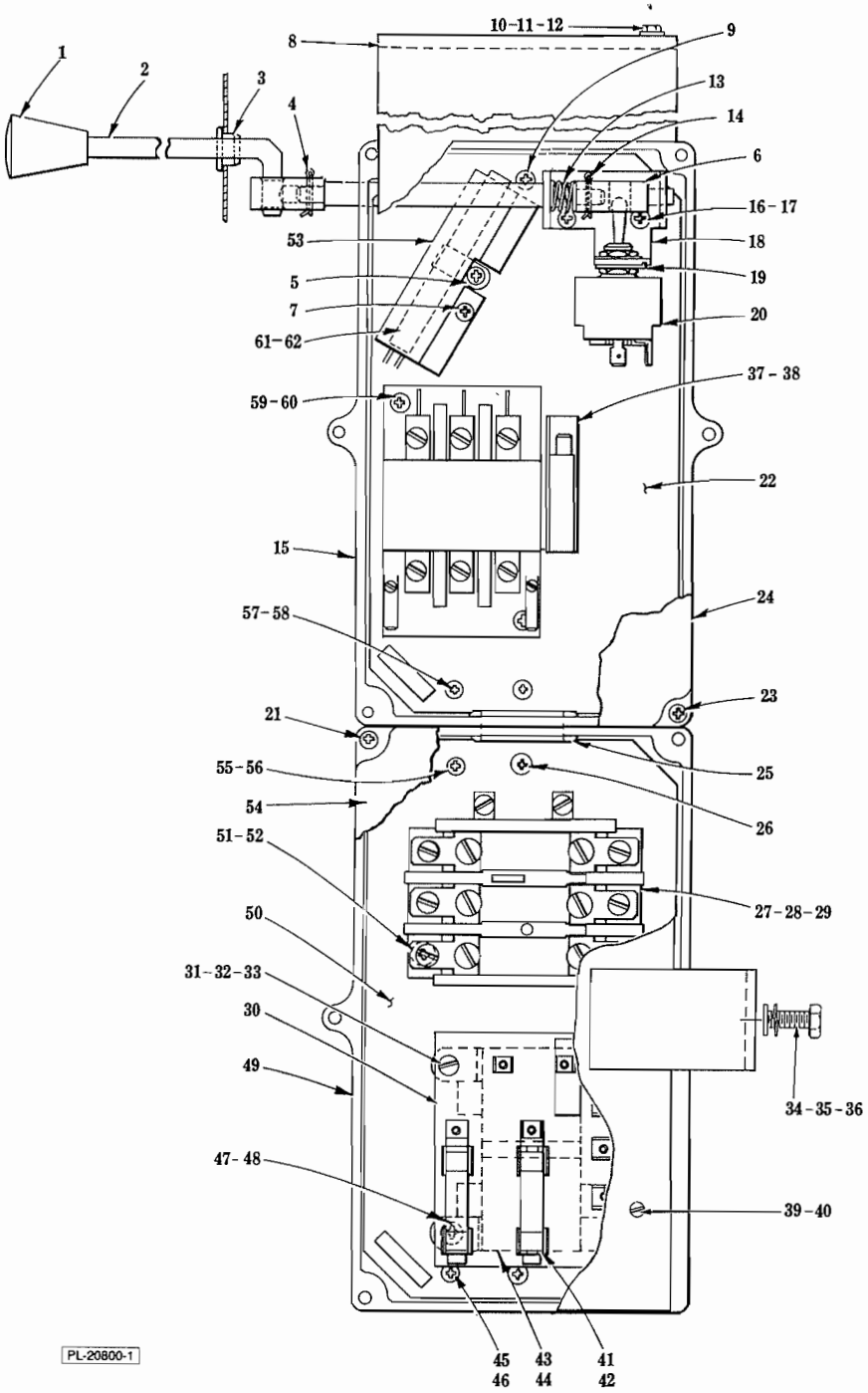

ELECTRICAL UNIT

ELECTRICAL UNIT

ILLUS. PL-20800-1	PART NO.	NAME OF PART[33]	AMT.
1	120054-2	Knob - Switch	1
2	121537-3	Rod - Switch Operating (Standard)	1
3	121539	Bushing - Switch Rod	1
4	PC-5-8	Cotter Pin 3/32 x 5/8	1
5	108199-1	Clamp - Air Heater	1
6	274307	Switch Shaft Assy. (Incls. items 4 & 14)	1
7	SD-15-40	Self-Tapping Screw 8-32 x 3/8 Phil. Pan Hd. "Taptite"	2
8	271932	Control Box Plate Assy	1
9	SD-15-40	Self-Tapping Screw 8-32 x 3/8 Phil. Pan Hd. "Taptite"	2
10	SC-41-1	Cap Screw 1/4-20 x 3/4 Hex Hd	2
11	WL-6-16	Lock Washer 1/4 Light	2
12	NS-46-52	Nut - Assy. 1/4-20 "Keps"	1
13	121547	Spring - Compression	1
14	PC-5-8	Cotter Pin 3/32 x 5/8	1
15	121546-1	Box - Motor Control	1
16	SD-15-40	Self-Tapping Screw 8-32 x 3/8 Phil. Pan Hd. "Taptite"	2
17	WL-7-7	Lock Washer 8 Ext. Shakeproof	2
18	123241-1	Bracket - Switch	1
19	121827	Ring - Locking	1
20	120388	Switch & Label Assy	1
21	SD-32-13	Self-Tapping Screw 8-16 x 1 Phil. Pan Hd. "Taptite"	6
22	121544	Panel - Control Box (Upper)	1
23	SD-32-13	Self-Tapping Screw 8-16 x 1 Phil. Pan Hd. "Plastite"	6
24	271940	Cover - Switch Box	1
25	121557	Grommet (Use with item 49)	1
26	SD-15-40	Self-Tapping Screw 8-32 x 3/8 Phil. Pan Hd. "Taptite"	2
27	88196-6-1	Relay - Thermal Overload (1 Ph.) (W/Overload Protection)	1
28	88196-9-1	Relay - Thermal Overload (3 Ph.) (W/Overload Protection)	1
29	*	Heater Element - Overload Relay (W/Overload Protection)	AR
30	114707	Terminal & Mounting Board Assy. (380 V./415 V./460 V./Pilot Circuit)	1
31	SC-19-33	Mach. Screw 8-32 x 1/2 Bind. Hd	2
32	WL-7-7	Lock Washer 8 Ext. Shakeproof	2
33	NS-9-12	Mach. Nut 8-32 Hex	2
34	SC-41-1	Cap Screw 1/4-20 x 3/4 Hex Hd	1
35	WL-6-16	Lock Washer 1/4 Light	1
36	WS-3-49	Washer	1
37	121926-1	Contactor Assy. (3 Pole, 220 V.)	1
38	121926-2	Contactor Assy. (3 Pole, 115 V.)	1
39	SC-18-20	Mach. Screw 10-24 x 1/2 Pan Hd	AR
40	WL-3-20	Lock Washer 10 Light	AR
41	FE-19-48	Fuse (.8 Amp., 600 V.) (60 Hz.)	2
42	FE-16-29	Fuse (1 Amp., 600 V.) (50 Hz.)	2
43	120907-1	Transformer (60 Hz.)	1
44	120908-1	Transformer (50 Hz.)	1
45	SD-15-20	Self-Tapping Screw 10-32 x 3/8 Phil. Pan Hd. "Taptite"	1
46	WL-7-12	Lock Washer 10 Ext. Shakeproof	1
47	SD-15-20	Self-Tapping Screw 10-32 x 3/8 Phil. Pan Hd. "Taptite"	2
48	WL-7-12	Lock Washer 10 Ext. Shakeproof	1
49	121546-2	Box - Motor Control	1
50	121555	Panel - Control Box	1
51	SD-15-20	Self-Tapping Screw 10-32 x 3/8 Phil. Pan Hd. "Taptite"	2
52	WL-7-12	Lock Washer 10 Ext. Shakeproof	1
53	121543	Shield - Heater	1
54	271940	Cover - Switch Box	1
55	SD-15-20	Self-Tapping Screw 10-32 x 3/8 Phil. Pan Hd. "Taptite"	1
56	WL-7-12	Lock Washer 10 Ext. Shakeproof	1
57	SD-15-20	Self-Tapping Screw 10-32 x 3/8 Phil. Pan Hd. "Taptite"	1
58	WL-7-12	Lock Washer 10 Ext. Shakeproof	1
59	SD-15-20	Self-Tapping Screw 10-32 x 3/8 Phil. Pan Hd. "Taptite"	2
60	WL-7-12	Lock Washer 10 Ext. Shakeproof	1
61	122345-1	Heater Assy. (115 V.)	1
62	122345-2	Heater Assy. (220 V.)	1
	112005	Gasket - Lid (Use with items 49 & 59)	AR
	122577-2	Wire Tie	AR

*Give Elec. Spec. Mach. Model & Motor Type.

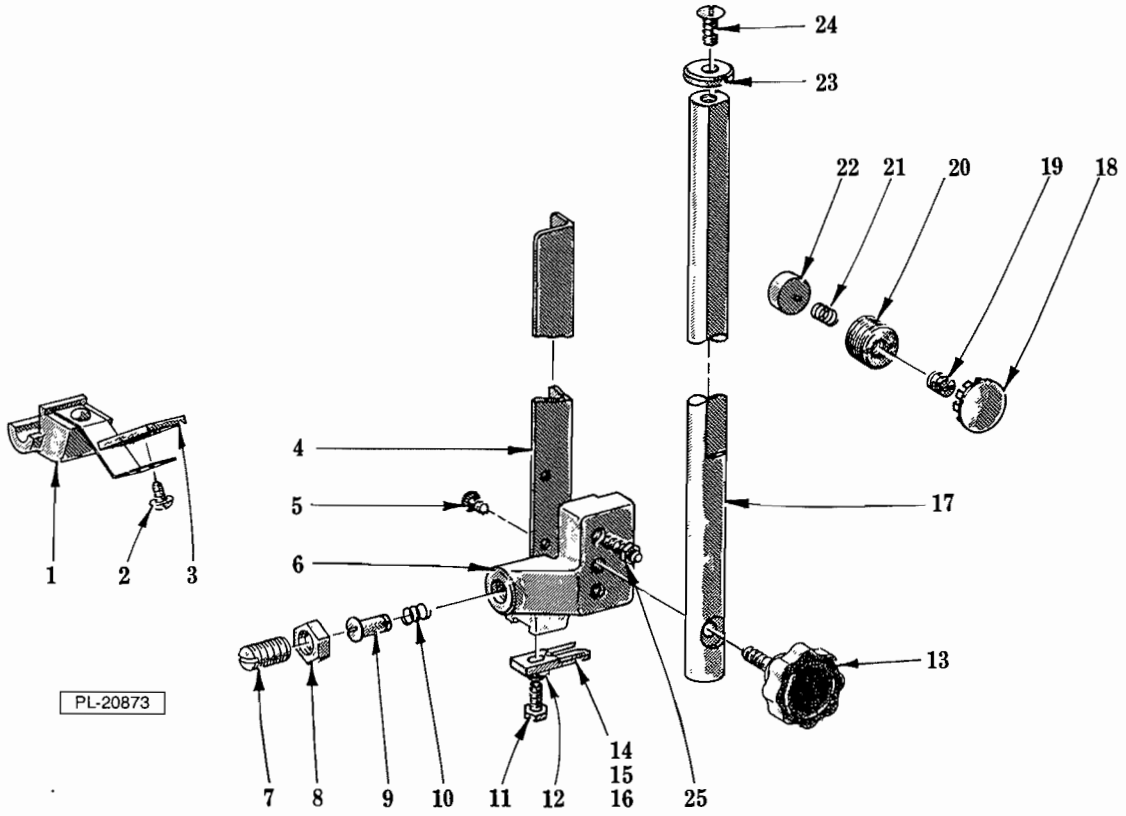

UPPER GUIDE, GUARD AND PULLEY WIPER UNIT

ILLUS. PL-20873	PART NO.	NAME OF PART33	AMT.
1	102399	Upper Pulley Wiper Assy. (Incls. items 2 & 3)	1
2	SC-53-1	Mach. Screw 10-24 × ¼ Truss Hd	2
3	123886	Wiper - Upper Pulley	1
4	120443-2	Guard - Upper Blade	1
5	SC-53-5	Mach. Screw 10-24 × ⅜ Truss Hd	2
6	113863	Upper Guide Support & Bushing Assy	1
7	SC-49-22	Set Screw 9/16-18 × ⅞ Hdls., Flat Pt	1
8	NS-18-33	Jam Nut 9/16-18 Hex Fin	1
9	101924	Blade Back-Up Block Assy	1
10	101925	Spring - Back-Up Block	1
11	SC-67-6	Mach. Screw 10-24 × ½ Trimmed Hex Hd	1
12	104573	Washer - Belleville	1
13	120444-1	Knob - Positioning	1
14	101929-2	Guide - Blade (.014″ Blade)	1
15	101929-1	Guide - Blade (.020″ Blade) (Standard)	1
16	101929-3	Guide - Blade (.038″ Blade)	1
17	102321-4	Rod - Slide	1
18	PB-2-26	Plug - Button	1
19	SC-63-33	Set Screw ⅜″-16 × ⅜ Hdls., Flat Pt	1
20	120140	Screw - Slide Rod Adjusting	1
21	75866	Spring - Slide Rod Adjusting	1
22	120141	Shoe - Slide Rod	1
23	69849	Stop - Slide Rod	1
24	SC-53-16	Mach. Screw 5/16-18 × ⅝ Truss Hd	1
25	102322	Screw - Adjusting	2
	113850-5	Upper Guide & Guard Assy. (.020″ Blade) (Incls. items 4 thru 12, 15 & 25)	1
	113850-6	Upper Guide & Guard Assy. (.014″ Blade) (Incls. items 4 thru 12, 14 & 25)	1