HOBART

CATALOG OF REPLACEMENT PARTS



SELF-WASHING ROTISSERIE OVEN

KA7E ML-137701

A product of HOBART 701 S. RIDGE AVENUE TROY, OHIO 45374-0001

FORM 43153 (June 2008)

Table of Contents

3 CONTROL PANEL (CUSTOMER SIDE)
5 CONTROL PANEL (USER SIDE)
7 ELECTRICAL COMPONENTS
9 DOOR (CUSTOMER SIDE)
11 DOOR (USER SIDE)
13 PLATES AND COVERS
15 LIGHT ASSEMBLY
17 FAN ASSEMBLY
19 FAN DUCT
21 HEATING ELEMENT ASSEMBLY
23 DRAIN TRAY
25 PUMP ASSEMBLY
27 PUMP MOUNTING
29 MOTOR ASSEMBLY
31 ACCESSORIES

 © HOBART 2008

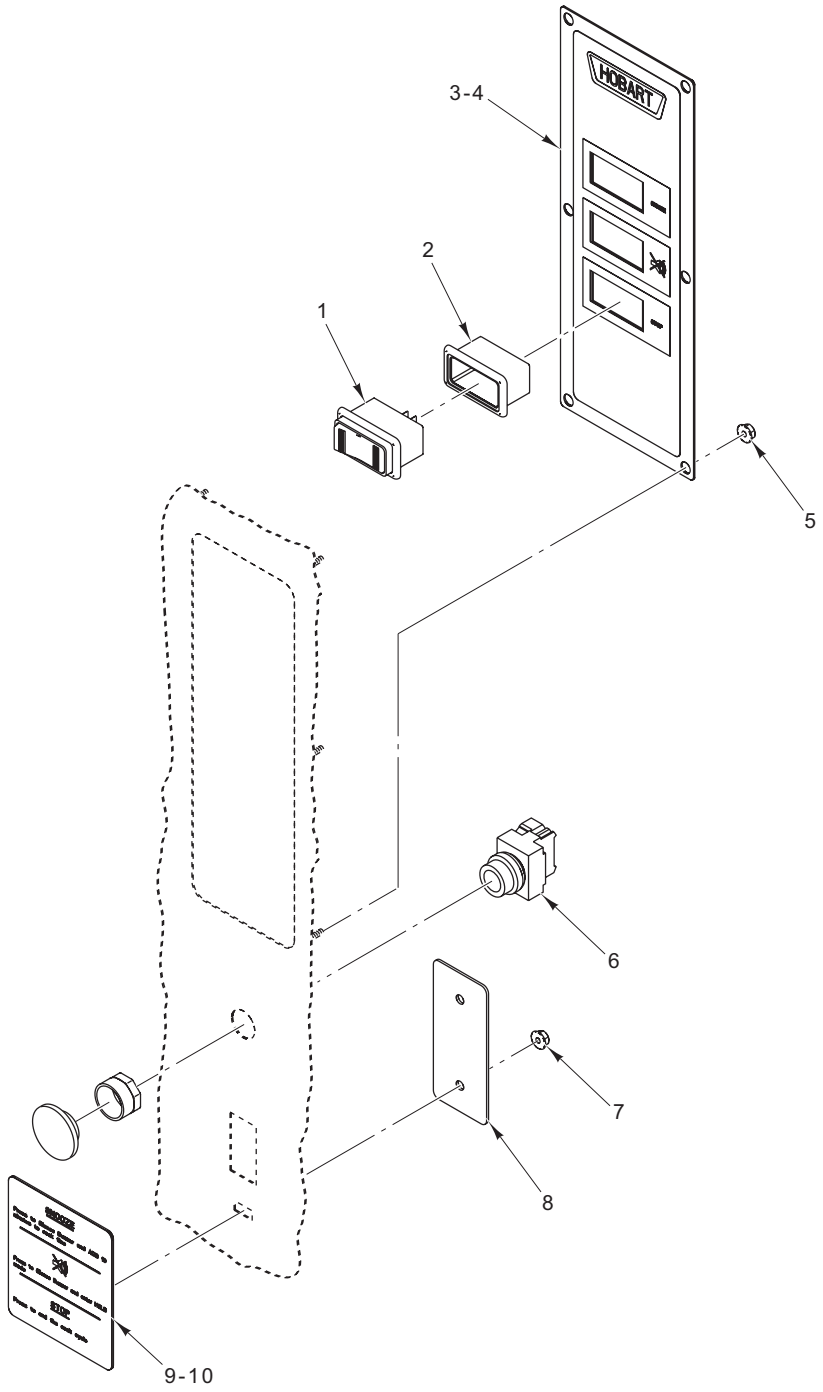

PL-58745

CONTROL PANEL (CUSTOMER SIDE)

ILLUS. PL-58745	PART NO.	NAME OF PART	AMT.
1	00-891952	Switch	3
2	00-877913-00002	Bezel – Power Switch	3
3	00-891352	Plate – Control Cover	1
4	00-891951	Overlay	1
5	NS-038-13	Lock Nut 10-24 Hex	6
6	00-891232	Switch – Push-button	1
7	NS-038-13	Lock Nut 10-24 Hex	2
8	00-891368	Plate – Auto-Clean	1
9	00-891369	Cover – Auto-Clean	1
10	00-891953	Overlay – Auto-Clean	1

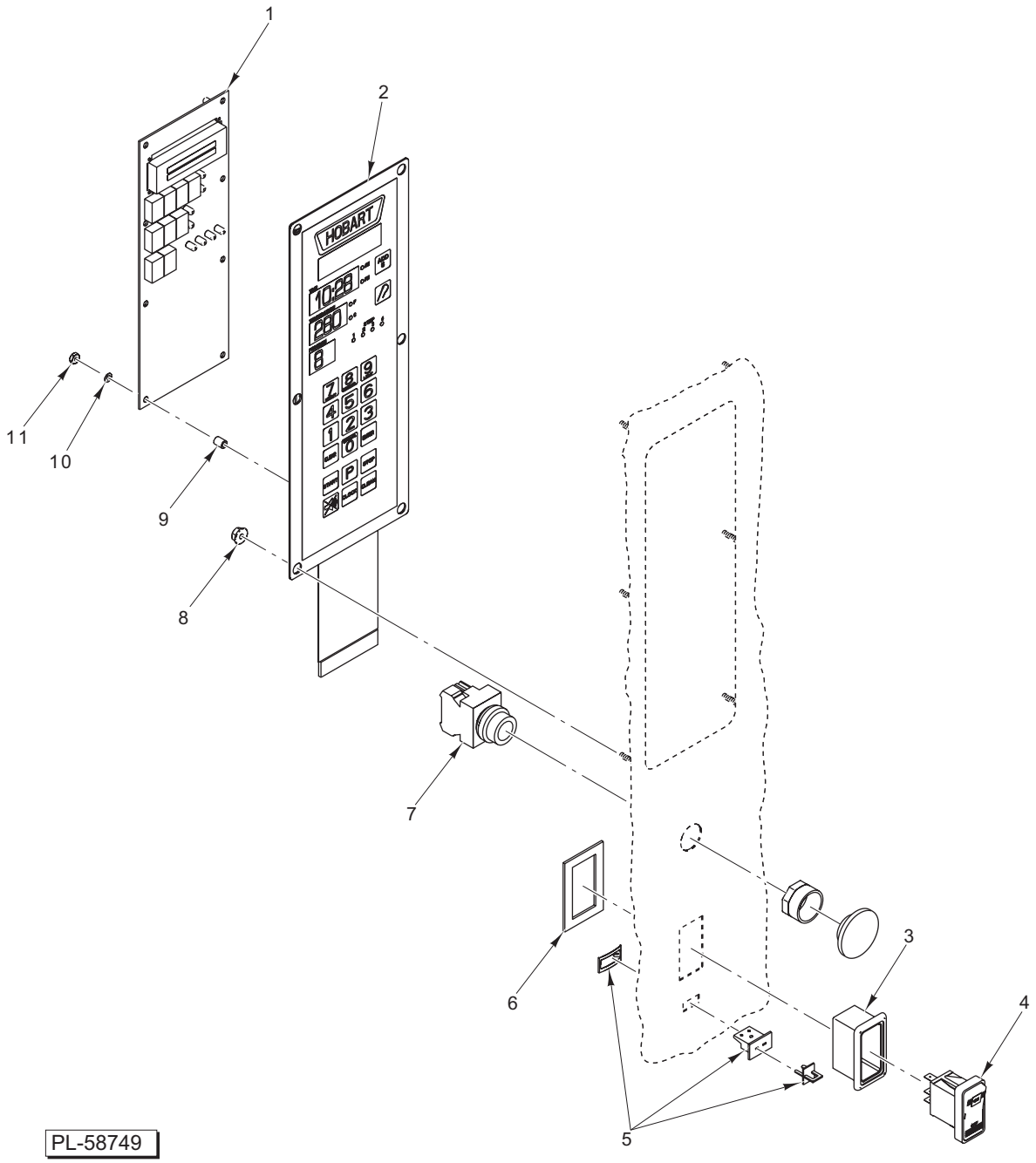

CONTROL PANEL (USER SIDE)

CONTROL PANEL (USER SIDE)

ILLUS. PL-58749	PART NO.	NAME OF PART	AMT.
1	00-891784	Board – Display	1
2	00-891433	Service Assy	1
3	00-877913-00002	Bezel – Power Switch	1
4	00-877913-00001	Switch – Power	1
5	00-891282	Jack – Miniature Panel	1
6	00-877938	Spacer – Switch	1
7	00-891232	Switch – Push-button	1
8	NS-038-13	Lock Nut 10-24 Hex	6
9	00-877966	Standoff	8
10	WL-013-05	Lockwasher #6 Internal	8
11	NS-011-07	Nut 6-32 Hex (SST)	8
	00-891910	Cable – Ribbon (Display Board to Main CPU)	1

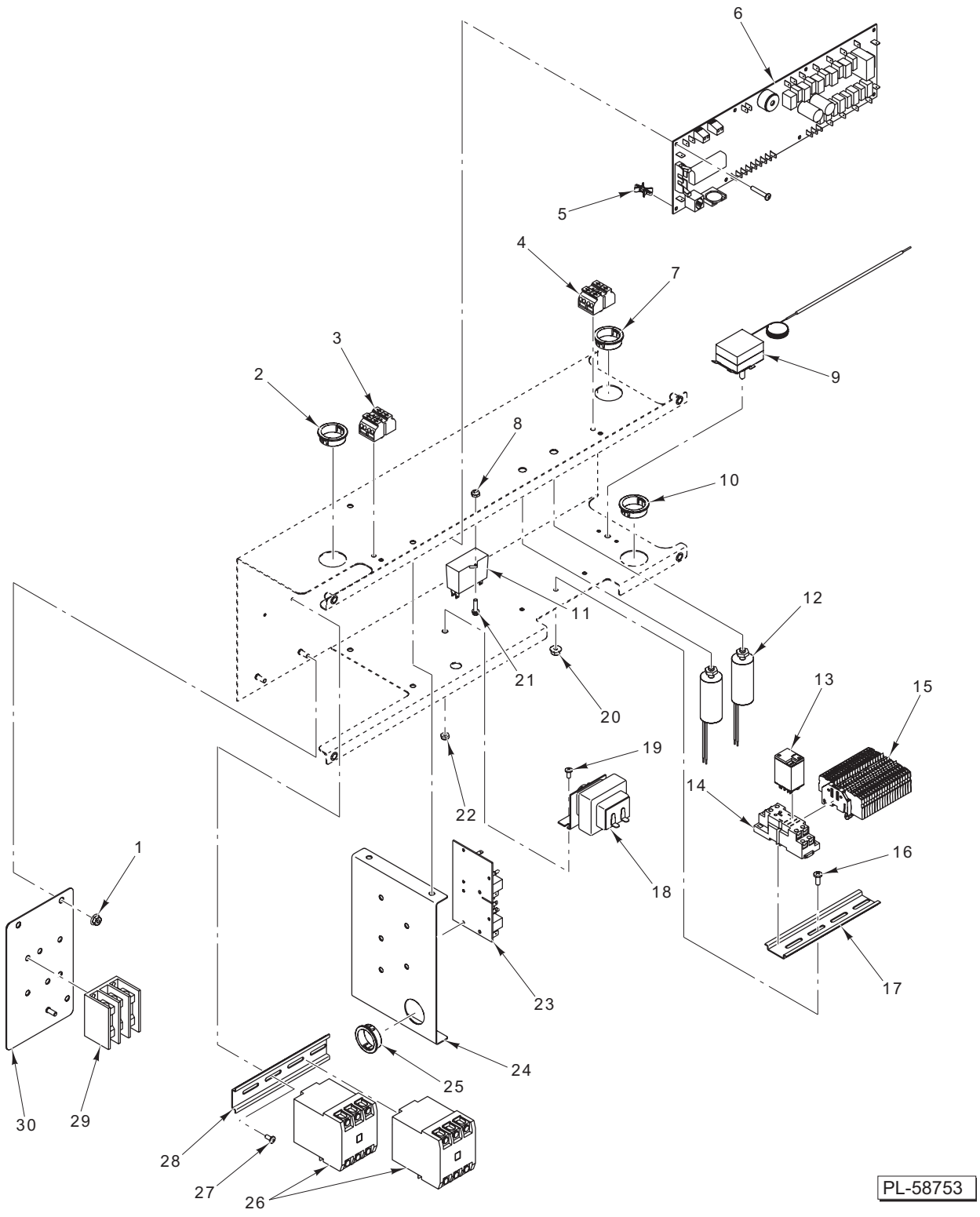

ELECTRICAL COMPONENTS

ELECTRICAL COMPONENTS

ILLUS. PL-58753	PART NO.	NAME OF PART	AMT.
1	NS-038-13	Lock Nut 10-24 Hex	2
2	FE-026-29	Bushing – Electrical Snap	1
3	00-891336	Terminal Block	1
4	00-891336	Terminal Block	1
5	00-877989	Support – Dual Lock	8
6	00-891785	Board – CPU	1
7	FE-026-29	Bushing – Electrical Snap	1
8	NS-047-98	Lock Nut 8-32 Hex	1
9	00-360145	Thermostat	1
10	FE-026-29	Bushing – Electrical Snap	1
11	00-877887	Capacitor (2.3 uF)	1
12	00-877885	Capacitor (1.5 uF)	2
13	00-891333	Relay – Wash Pump	1
14	00-891334	Relay – Base	1
15	00-891331	Terminal Block	1
16	SC-018-22	Mach. Screw 10-24 x 1/2 Phil. Pan Hd.	2
17	00-877889	Rail – Din	1
18	00-891853	Transformer (20 V.)	1
19	SC-018-31	Mach. Screw 8-32 x 3/8 Phil. Pan Hd.	2
20	NS-038-13	Lock Nut 10-24 Hex	2
21	SC-018-23	Mach. Screw 8-32 x 5/8 Phil. Pan Hd.	1
22	NS-047-98	Lock Nut 8-32 Hex	2
23	00-891772	Board – Control Water Level	1
24	00-891854	Wall – Divider	1
25	FE-026-29	Bushing – Electrical Snap	1
26	00-891420	Contactor – Heater	2
27	SC-018-22	Mach. Screw 10-24 x 1/2 Phil. Pan Hd.	2
28	00-877889	Rail – Din	1
29	00-877916-00001	Block – Power (3-Pole)	1
30	00-891934	Bracket – Power	1

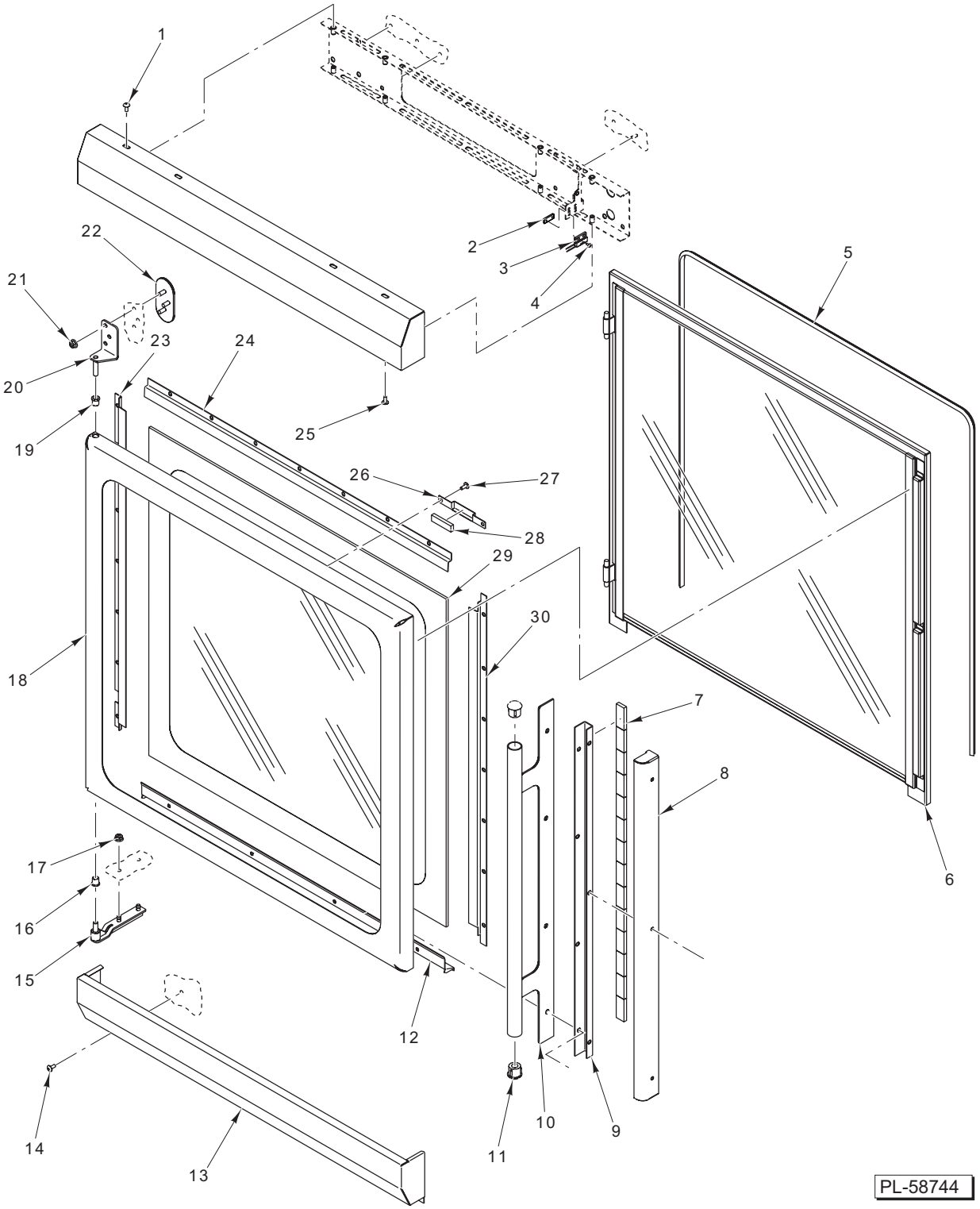

DOOR (CUSTOMER SIDE)

DOOR (CUSTOMER SIDE)

ILLUS. PL-58744	PART NO.	NAME OF PART	AMT.
1	SC-066-06	Mach. Screw 10-24 x 1/2 Phil. Truss Hd.	4
2	00-183396	Plate – Screw Switch	1
3	00-891418	Switch – Door Magnet	1
4	SC-113-10	Mach. Screw 4-40 x 3/8 Phil. Pan Hd.	2
5	00-891716	Gasket – Extrusion	AR
6	00-891349	Door – Inner	1
7	00-360128	Magnet – Door	AR
8	00-891346	Cover – Door Magnet	1
9	00-891345	Holder – Door Magnet	AR
10	00-891347	Handle – Weldment	1
11	00-474831	Plug – Handle	2
12	00-891985	Channel – Door Frame	1
13	00-891834	Facade – Sump	1
14	SC-066-06	Mach. Screw 10-24 x 1/2 Phil. Truss Hd.	4
15	00-891847	Hinge – Door Assy.	1
16	00-877953	Bearing – Bushing	1
17	NS-038-04	Lock Nut 1/4-20	AR
18	00-891964-00001	Door – Outer Skin	1
19	00-877953	Bearing – Bushing	AR
20	00-891806-00002	Pin Assy. – Hinge	AR
21	NS-038-04	Lock Nut 1/4-20	AR
22	00-891356	Plate – Hinge Mounting	AR
23	00-891981-00002	Retainer – Door Glass	1
24	00-891980	Retainer – Door Glass	1
25	SC-066-06	Mach. Screw 10-24 x 1/2 Phil. Truss Hd.	4
26	00-891995	Cover – Magnet	1
27	00-048489	Mach. Screw 8-32 x 3/8 Self-Locking Truss Hd. (SST)	AR
28	00-891912	Magnet – Door Sensor	1
29	00-891966-00001	Glass (With Screen)	1
30	00-891982	Retainer – Door Glass	1

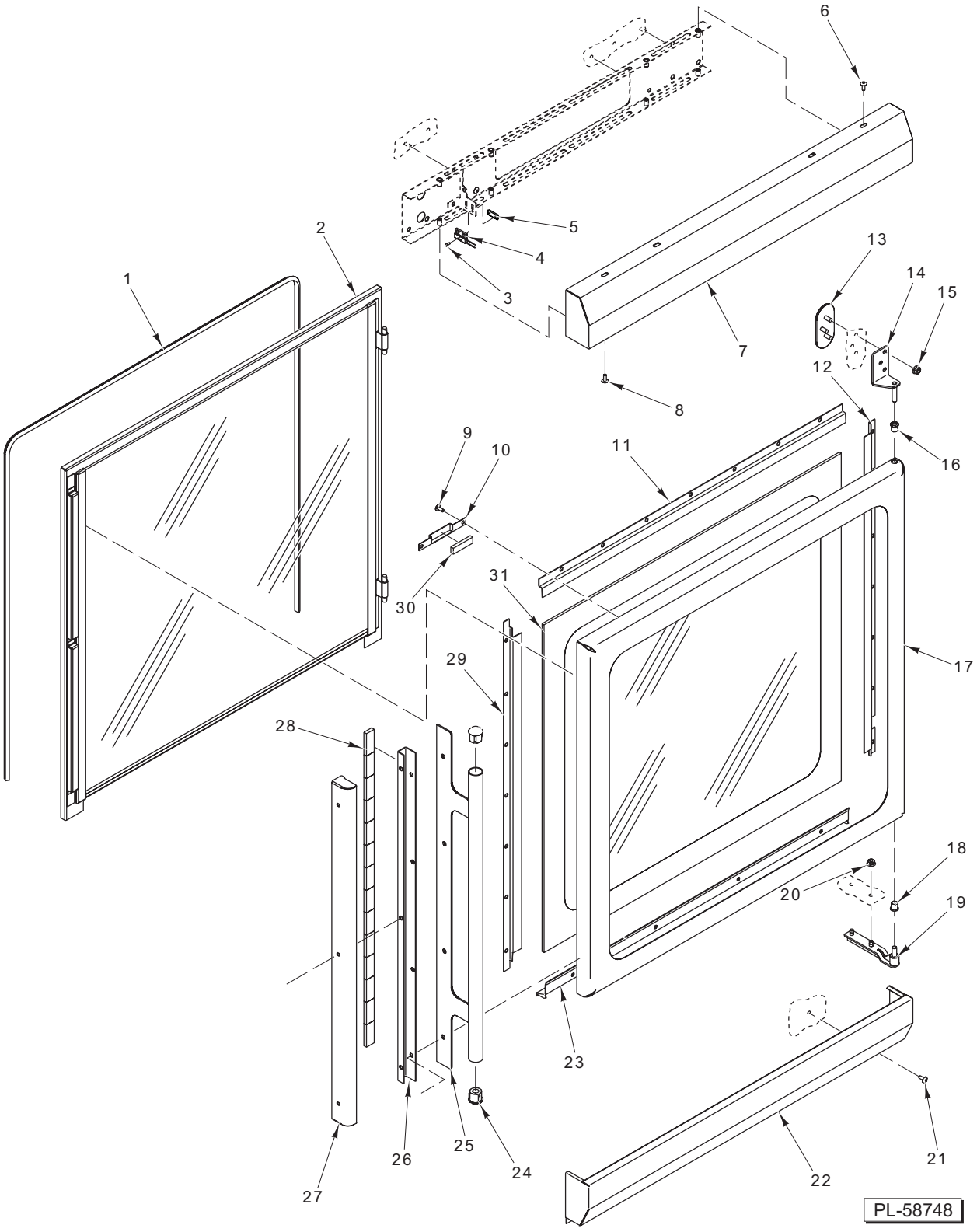

DOOR (USER SIDE)

DOOR (USER SIDE)

ILLUS. PL-58748	PART NO.	NAME OF PART	AMT.
1	00-891716	Gasket – Extrusion	AR
2	00-891999	Door – Inner Assy.	1
3	SC-113-10	Mach. Screw 4-40 x 3/8 Phil. Pan Hd.	2
4	00-891418	Switch – Door Magnet	1
5	00-183396	Plate – Screw Switch	1
6	SC-066-06	Mach. Screw 10-24 x 1/2 Phil. Truss Hd.	4
7	00-891751	Facade	1
8	SC-066-06	Mach. Screw 10-24 x 1/2 Phil. Truss Hd.	4
9	00-048489	Mach. Screw 8-32 x 3/8 Self-Locking Truss Hd. (SST)	AR
10	00-891995	Cover – Magnet	1
11	00-891980	Retainer – Door Glass	1
12	00-891981-00001	Retainer – Door Glass	1
13	00-891356	Plate – Hinge Mounting	AR
14	00-891806-00001	Pin Assy. – Hinge	1
15	NS-038-04	Lock Nut 1/4-20	AR
16	00-877953	Bearing – Bushing	1
17	00-891964-00002	Door – Outer Skin	1
18	00-877953	Bearing – Bushing	AR
19	00-891847	Hinge – Door Assy.	AR
20	NS-038-04	Lock Nut 1/4-20	AR
21	SC-066-06	Mach. Screw 10-24 x 1/2 Phil. Truss Hd.	4
22	00-891834	Facade – Sump	1
23	00-891985	Channel – Door Frame	1
24	00-474831	Plug – Handle	2
25	00-891347	Handle – Weldment	1
26	00-891345	Holder – Door Magnet	AR
27	00-891346	Cover – Door Magnet	1
28	00-360128	Magnet – Door	AR
29	00-891982	Retainer – Door Glass	1
30	00-891912	Magnet – Door Sensor	1
31	00-891966-00001	Glass (With Screen)	1

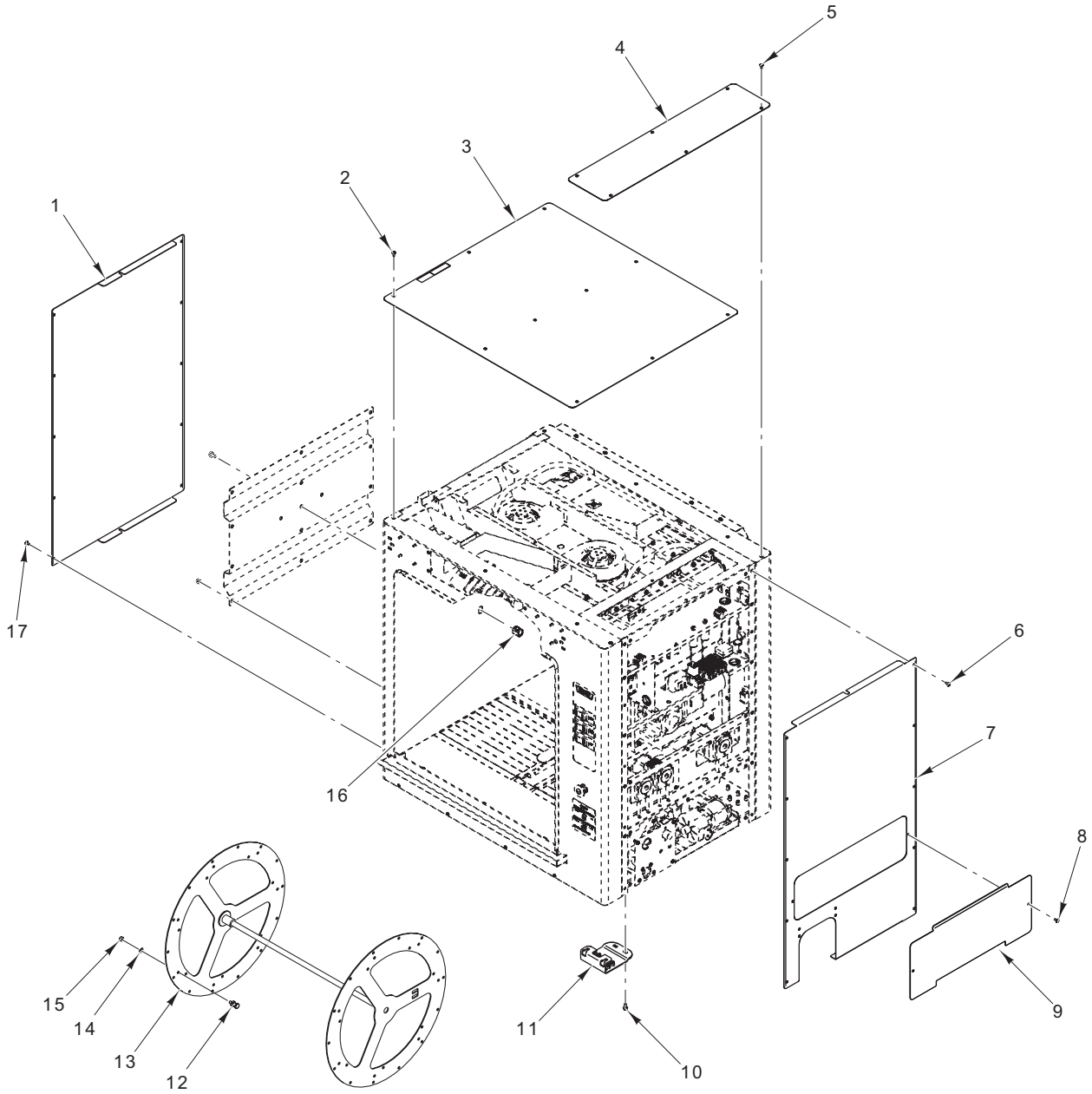

PL-58747

PLATES AND COVERS

PLATES AND COVERS

ILLUS. PL-58747	PART NO.	NAME OF PART	AMT.
1	00-891778	Cover – Side (LH)	1
2	SC-066-06	Mach. Screw 10-24 x 1/2 Phil. Truss Hd.	AR
3	00-891779	Cover – Top	1
4	00-891817	Cover – Control Panel Top	1
5	SC-066-06	Mach. Screw 10-24 x 1/2 Phil. Truss Hd.	6
6	SC-066-06	Mach. Screw 10-24 x 1/2 Phil. Truss Hd.	AR
7	00-891926	Cover – Upper Side	1
8	00-891430	Thumb Screw 10-24 x 1/2	2
9	00-891986	Cover – Pump	1
10	SC-121-61	Mach. Screw 1/4-20 x 5/8 Hex Washer Hd.	AR
11	00-891845	Support – Foot Assembly	1
12	00-877940	Pin – Support	7
13	00-877923-00001	Disc – Rotor Assy. (Incls. Items 12, 14, & 15) (SST)	1
14	SL-005-09	Spring – Loading	7
15	NS-015-11	Nut 5/16-18 Hex (SST)	7
16	00-877988	Support – Bearing	1
17	SC-066-06	Mach. Screw 10-24 x 1/2 Phil. Truss Hd.	10

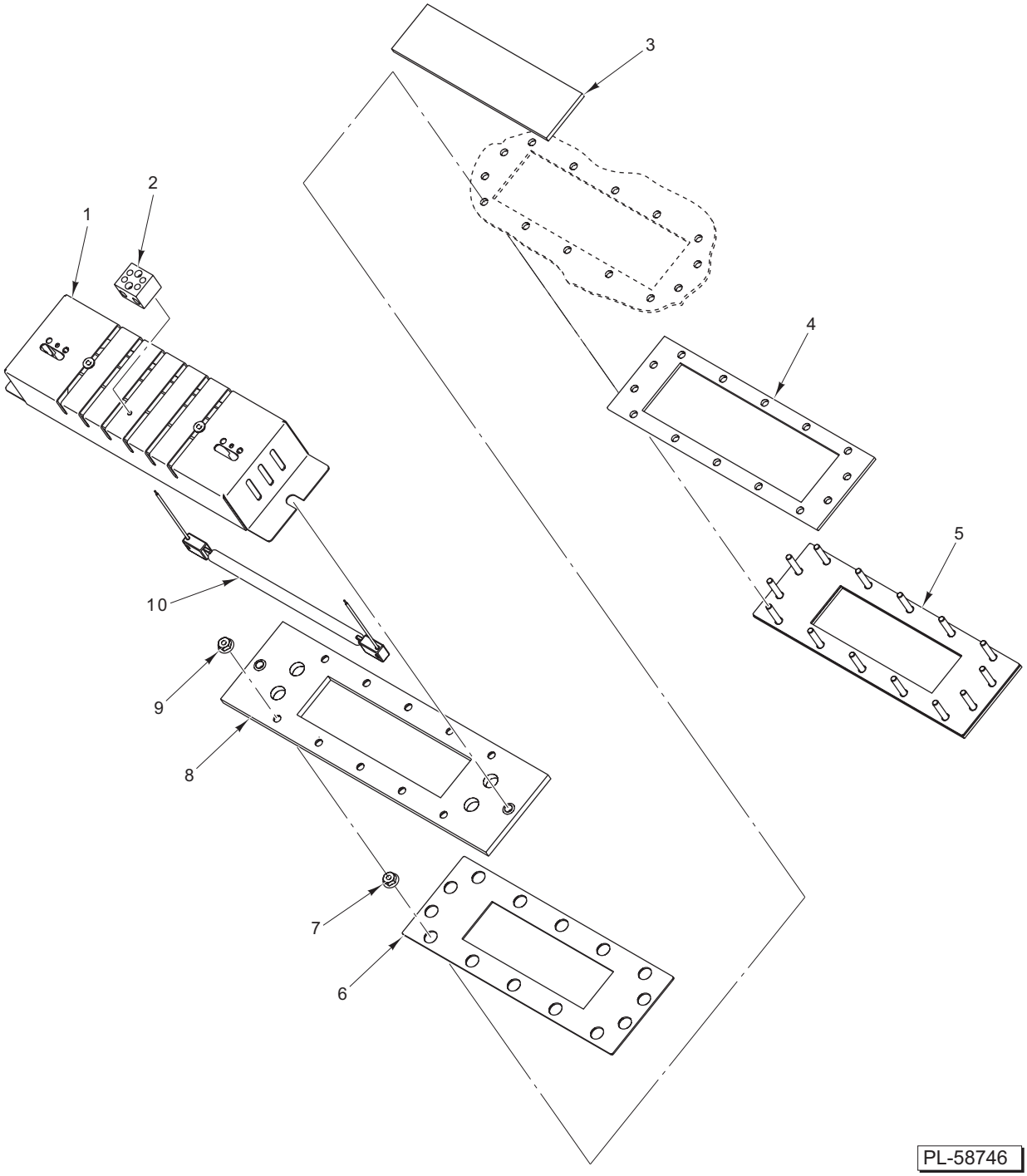

LIGHT ASSEMBLY

LIGHT ASSEMBLY

ILLUS. PL-58746	PART NO.	NAME OF PART	AMT.
1	00-891758	Light Assy.	1
2	00-891379	Block – High Temperature	1
3	00-891747	Cover – Glass Light	1
4	00-891931	Gasket – Light Bezel	1
5	00-891746	Bezel Assy.	1
6	00-891403	Gasket – Graphite (Non-Wrapped)	1
7	NS-038-13	Lock Nut 10-24	AR
8	00-891930	Retainer – Glass	1
9	NS-038-13	Lock Nut 10-24	AR
10	00-891767	Bulb – Light	1

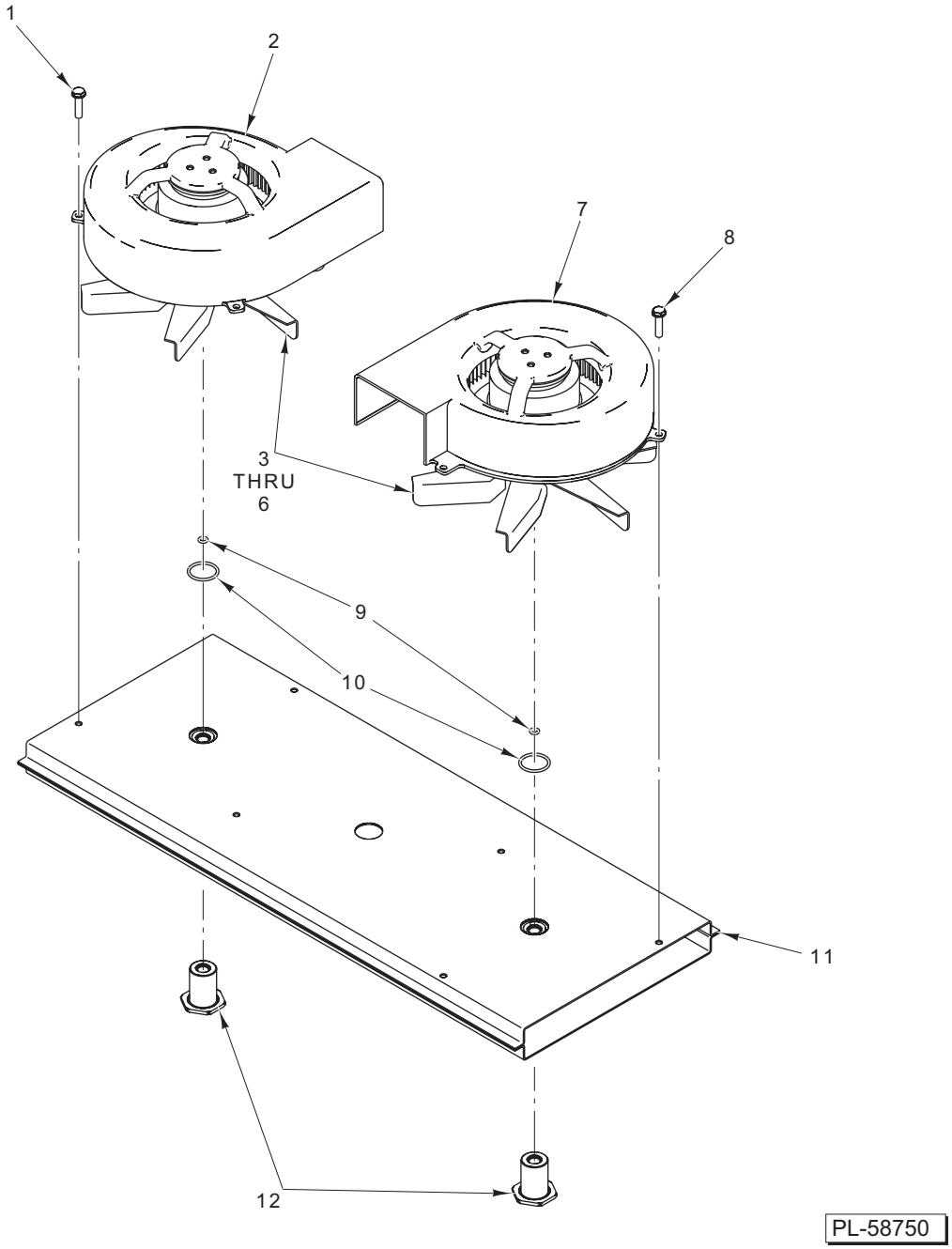

FAN ASSEMBLY

FAN ASSEMBLY

ILLUS. PL-58750	PART NO.	NAME OF PART	AMT.
1	SD-039-34	Self-Tapping Screw 10-16 x 3/4 Hex Washer Hd.	3
2	00-891393	Fan – Motor & Blade Assy.	1
3	00-891362	Blade – Fan (7 In.)	2
4	00-891396	Nut	2
5	00-891394	Clip	2
6	00-891395	Washer	2
7	00-891393	Fan – Motor & Blade Assy.	1
8	SD-039-34	Self-Tapping Screw 10-16 x 3/4 Hex Washer Hd.	3
9	00-891397	O-Ring – Fan Shaft	2
10	00-891398	O-Ring – Fan Nut	2
11	00-891947	Box – Fan Assy.	1
12	00-891342	Nut – Fan Mounting	2

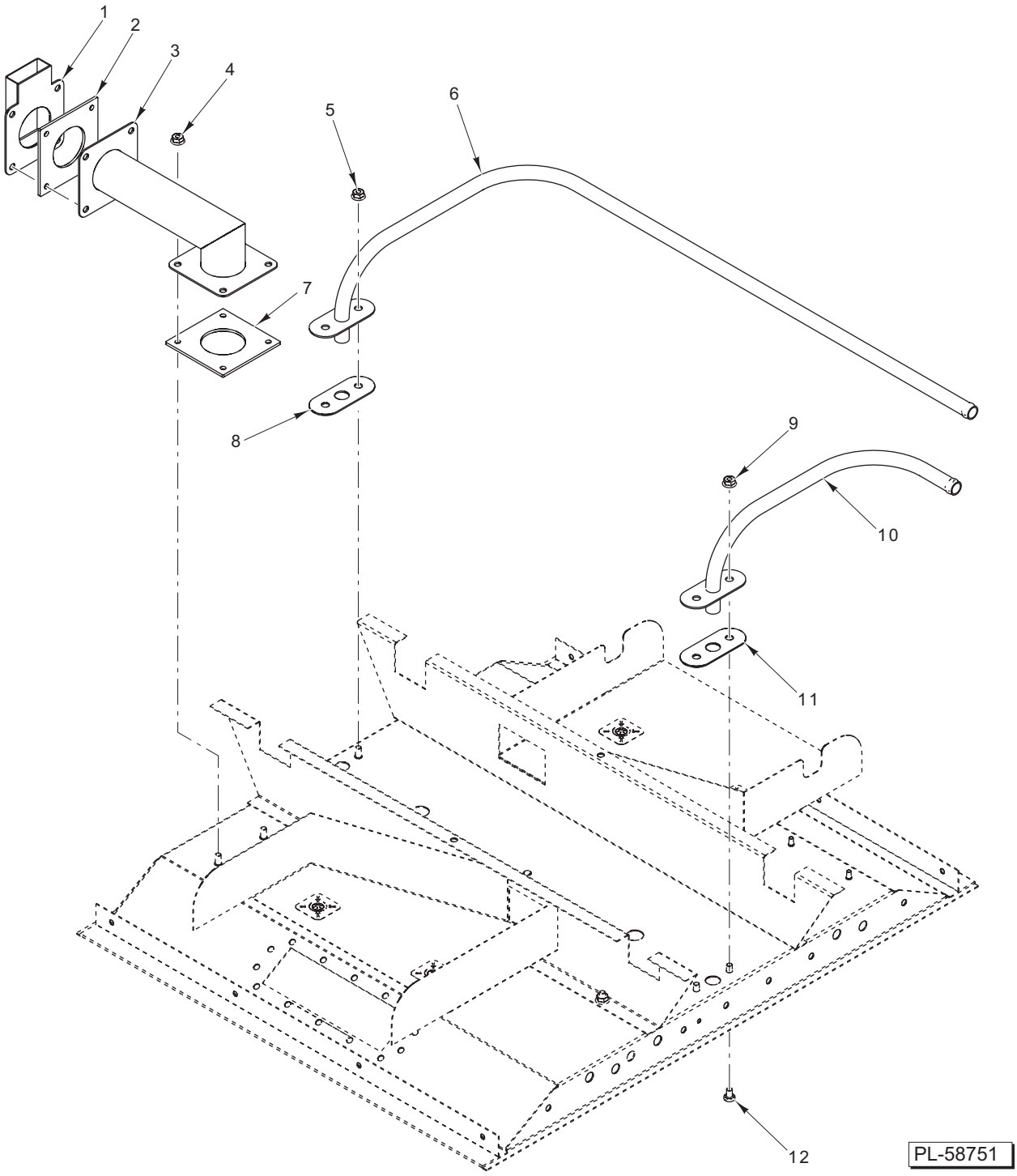

FAN DUCT

FAN DUCT

ILLUS. PL-58751	PART NO.	NAME OF PART	AMT.
1	00-891339	Plate Weldment – Vent	1
2	00-891357	Gasket – Vent Graphite	1
3	00-891341	Vent Pipe – Weldment	1
4	NS-038-04	Lock Nut 1/4-20	4
5	NS-038-04	Lock Nut 1/4-20	2
6	00-891836	Nozzle – Support Side	1
7	00-891357	Gasket – Vent Graphite	1
8	00-891360	Gasket – Nozzle	1
9	NS-038-04	Lock Nut 1/4-20	2
10	00-891837	Nozzle – Control Side	1
11	00-891360	Gasket – Nozzle	1
12	SC-130-07	Mach. Screw 1/4-20 x 3/8 Slotted Pan Hd. (SST)	2

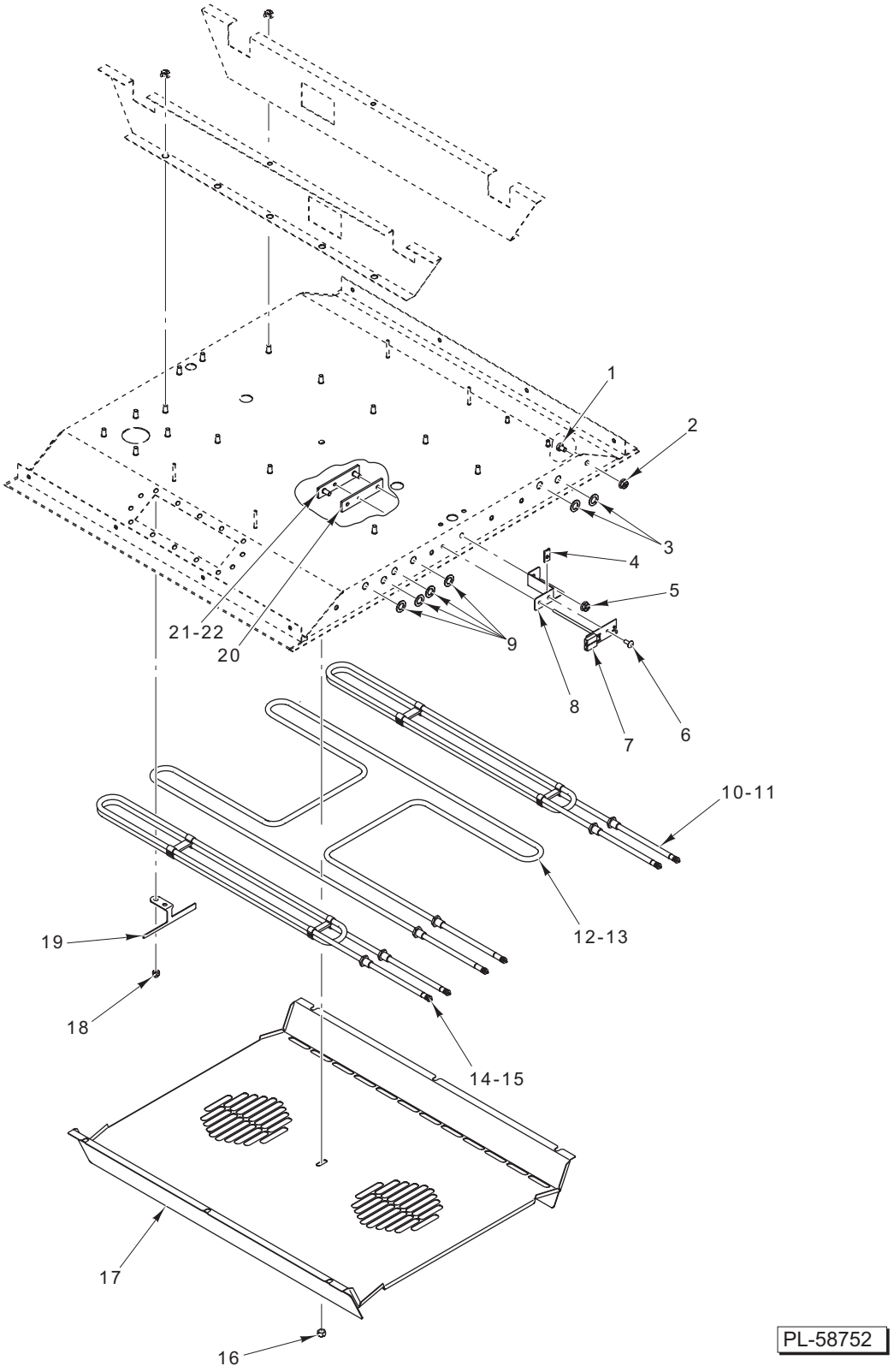

HEATING ELEMENT ASSEMBLY

HEATING ELEMENT ASSEMBLY

ILLUS. PL-58752	PART NO.	NAME OF PART	AMT.
1	SC-130-07	Mach. Screw 1/4-20 x 3/8 Slotted Pan Hd. (SST)	AR
2	NS-038-04	Lock Nut 1/4-20	AR
3	00-891361	Gasket – Heating Element	2
4	00-877868	Nut – Tinnerman	1
5	NS-038-04	Lock Nut 1/4-20	AR
6	SC-066-06	Mach. Screw 10-24 x 1/2 Phil. Truss Hd.	AR
7	00-356946	Sensor – Temperature	1
8	00-891850	Bracket – Temperature Probe	1
9	00-891361	Gasket – Heating Element	4
10	00-891766-00001	Element – Heating (208 V., 3000 W.)	1
11	00-891766-00002	Element – Heating (240 V., 3100 W.)	1
12	00-891765-00001	Element – Heating (208 V., 2500 W.)	1
13	00-891765-00002	Element – Heating (240 V., 2600 W.)	1
14	00-891766-00001	Element – Heating (208 V., 3000 W.)	1
15	00-891766-00002	Element – Heating (240 V., 3100 W.)	1
16	NS-025-04	Crown Nut 1/4-20 (SST)	AR
17	00-891972	Cover – Fan Assy.	1
18	NS-025-01	Crown Nut 10-24 (SST)	AR
19	00-891731	Bracket – Heating Element	1
20	00-891936	Gasket – High Temperature	1
21	00-891351	Plate – High Temp. Assy.	1
22	00-891875	Plate – High Temperature	1

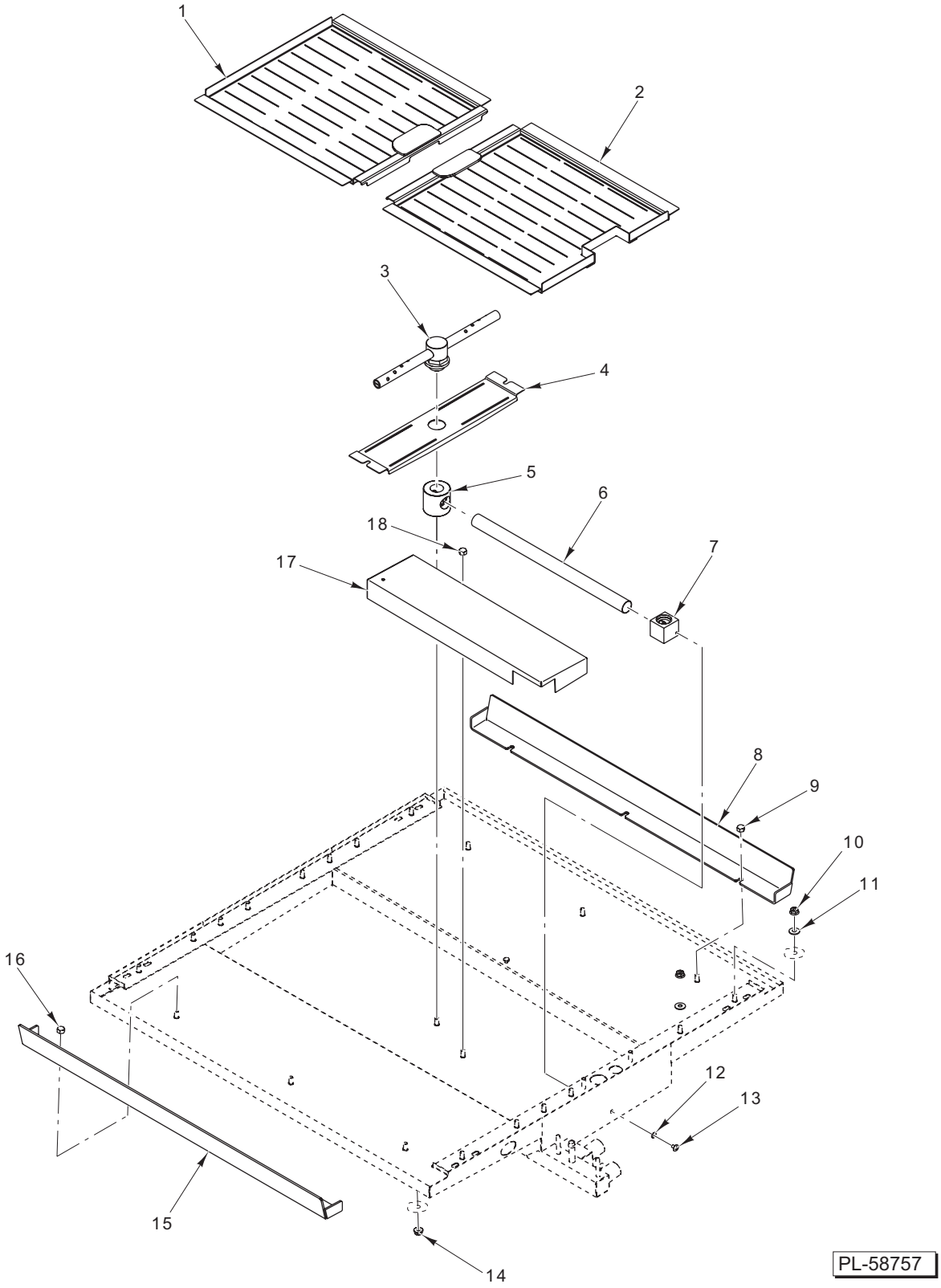

DRAIN TRAY

DRAIN TRAY

ILLUS. PL-58757	PART NO.	NAME OF PART	AMT.
1	00-891377	Strainer Assy. (Non Drive)	1
2	00-891374	Strainer Assy. (Drive Side)	1
3	00-891775	Arm – Wash	1
4	00-891920	Support – Strain Pan	1
5	00-891833-00002	Support – Washer Pan	1
6	00-891945	Pipe – Fill	1
7	00-891889	Block – Manifold	1
8	00-891937	Shield – Splash	1
9	NS-025-04	Crown Nut 1/4-20 (SST)	AR
10	NS-038-04	Lock Nut 1/4-20	AR
11	00-891404	Washer (SST)	AR
12	WS-031-54	Washer (Teflon)	AR
13	SC-118-62	Mach. Screw 10-32 x 5/16 Phil. Pan Hd. (SST)	AR
14	NS-038-04	Lock Nut 1/4-20	AR
15	00-891937	Shield – Splash	1
16	NS-026-01	Crown Nut 5/16-18 (SST)	AR
17	00-891343	Shroud – Drain	1
18	NS-038-04	Lock Nut 1/4-20	AR

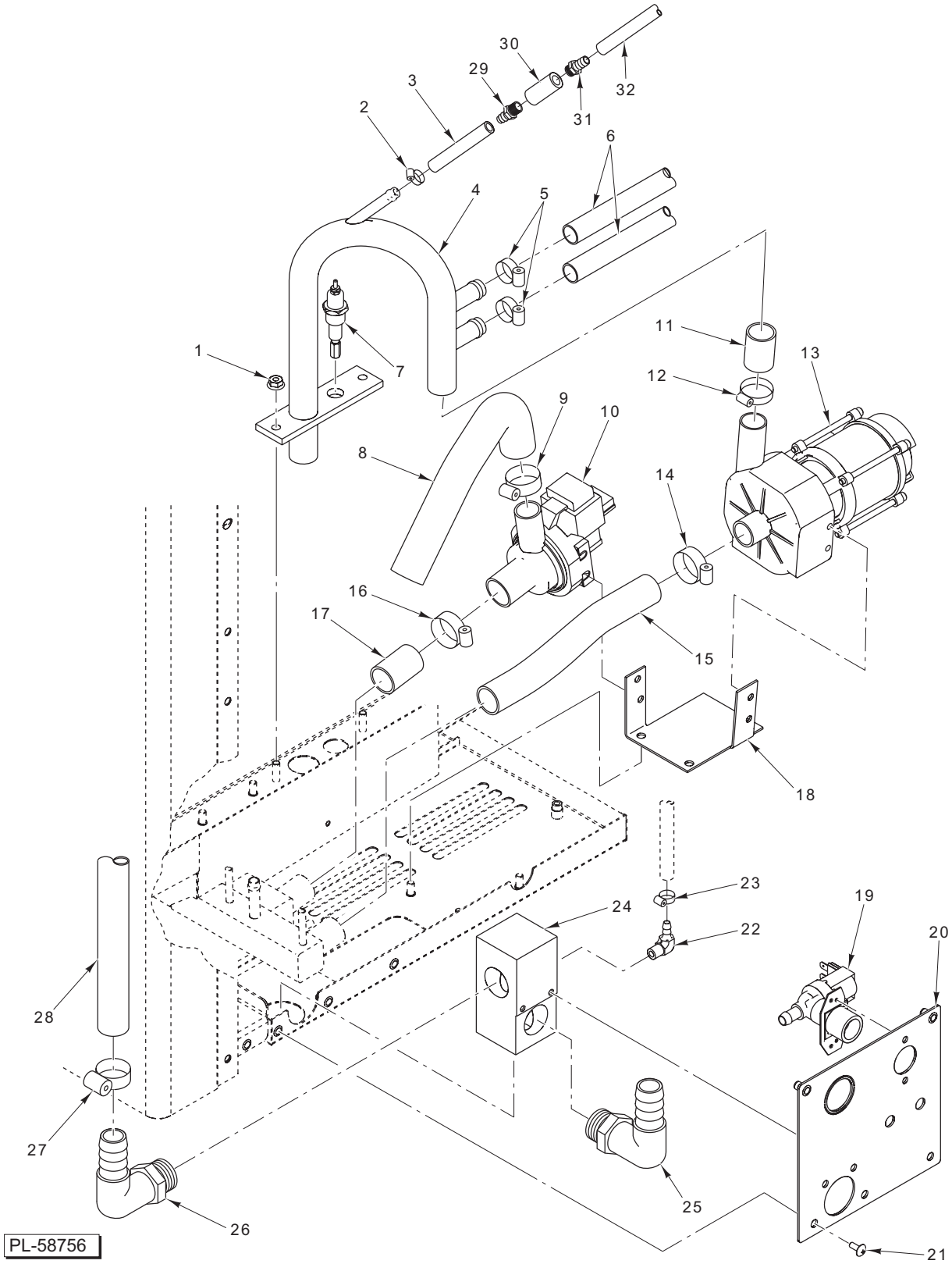

PUMP ASSEMBLY

PUMP ASSEMBLY

ILLUS. PL-58756	PART NO.	NAME OF PART	AMT.
1	NS-038-04	Lock Nut 1/4-20	2
2	00-891387	Clamp – Hose 1/2 x 24/32 Worm Drive	1
3	00-891907-00001	Hose – Water Manifold (10 In.)	1
4	00-891887	Manifold Assy.	1
5	00-891388	Clamp – Hose 11/16 x 1 1/4 Worm Drive	2
6	00-891908-00001	Hose – Upper Nozzle (46 In.)	2
7	00-891756	Sensor – Water Level	1
8	00-891967	Hose – Drain Outlet Formed	1
9	00-891389	Clamp – Hose 15/16 x 1 1/2 Worm Drive	1
10	00-891764	Pump – Drain	1
11	00-891410-00003	Hose – Wash Pump Outlet (5 In.)	1
12	00-891389	Clamp – Hose 15/16 x 1 1/2 Worm Drive	1
13	00-891762	Pump – Wash	1
14	00-891389	Clamp – Hose 15/16 x 1 1/2 Worm Drive	1
15	00-891410-00002	Hose – Wash Pump Inlet (7 1/2 In.)	1
16	00-891389	Clamp – Hose 15/16 x 1 1/2 Worm Drive	1
17	00-891410-00001	Hose – Drain Pump Inlet (3 In.)	1
18	00-891933	Bracket – Dual Pumps	1
19	00-891757	Valve – Water Fill	1
20	00-891928	Plate – Utility	1
21	SC-066-06	Mach. Screw 10-24 x 1/2 Phil. Truss Hd.	3
22	00-891359	Fitting (1/8 NPT)	1
23	00-891386	Clamp – Hose 7/32 x 5/8 Worm Drive	1
24	00-891358	Block – Drain	1
25	00-891385	Fitting (1 In. x 1 NPT)	1
26	00-891385	Fitting (1 In. x 1 NPT)	1
27	00-891389	Clamp – Hose 15/16 x 1 1/2 Worm Drive	1
28	00-891909-00001	Hose – Overflow (4 In.)	1
29	00-891434	Fitting – Barb	1
30	00-891435	Flow Restrictor	1
31	00-891434	Fitting – Barb	1
32	00-891907-00002	Hose – Water Valve Outlet (7 In.)	1
	00-891384	Fitting (1/4 x 1/8 NPT)	2

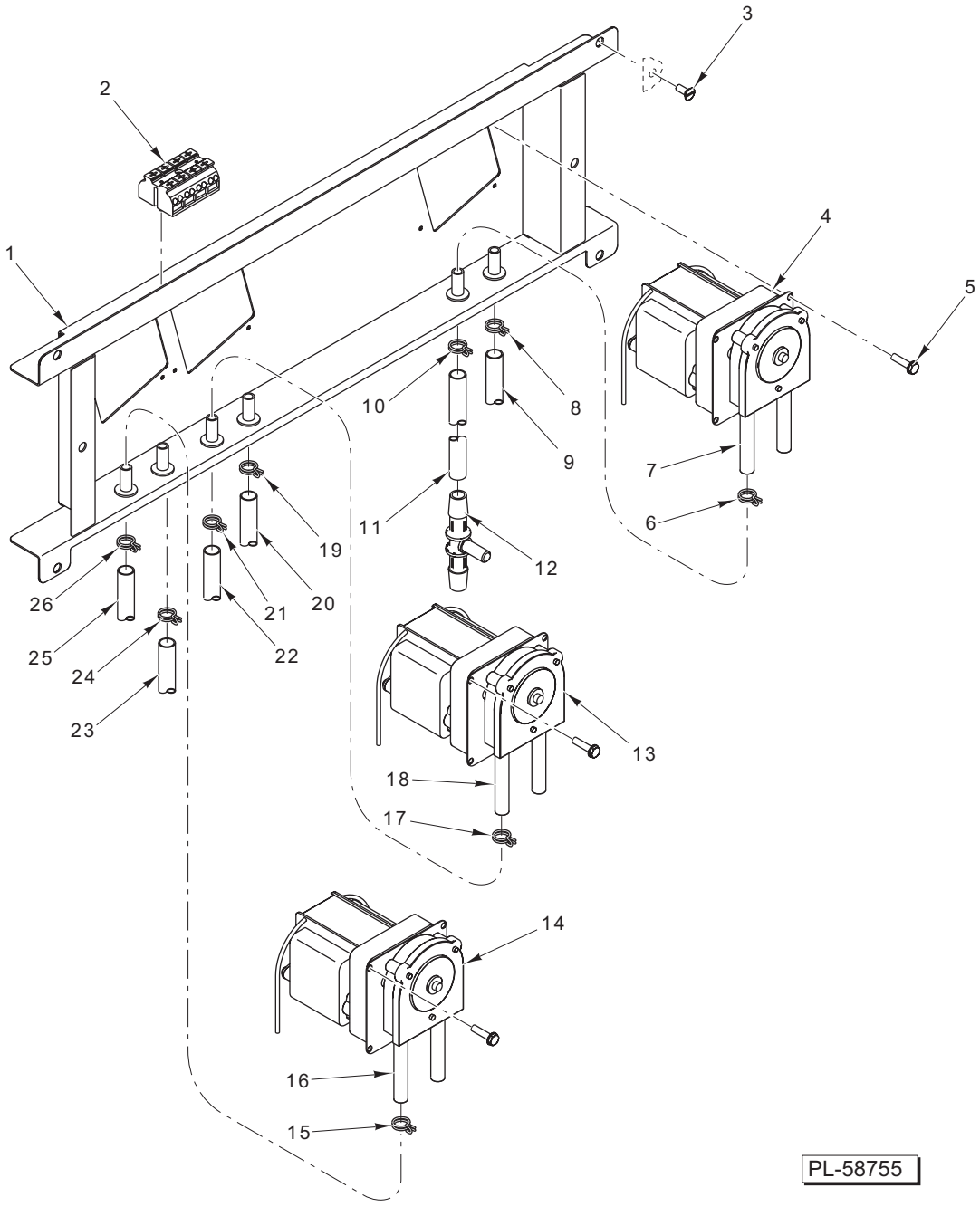

PUMP MOUNTING

PUMP MOUNTING

ILLUS. PL-58755	PART NO.	NAME OF PART	AMT.
1	00-891976	Box – Pump Mounting	1
2	00-891380	Block – Terminal (4 Pos.)	1
3	SC-022-19	Mach. Screw 10-24 x 1/2 Slotted Flat Hd. (SST)	10
4	00-891763	Pump – Chemical Peristaltic	1
5	SD-039-34	Self-Tapping Screw 10-16 x 3/4 Hex Washer Hd., Type AB	6
6	00-891386	Clamp – Hose	2
7	00-891426	Hose	1
8	00-891386	Clamp – Hose	1
9	00-891906-00002	Hose – Chemical Out (22 In.)	1
10	00-891386	Clamp – Hose	1
11	00-891906-00001	Hose – Chemical In (22 In.)	1
12	00-891411	Sensor – Chemical	1
13	00-891763	Pump – Grease	1
14	00-891763	Pump – Gray Water	1
15	00-891386	Clamp – Hose	2
16	00-891426	Hose	1
17	00-891386	Clamp – Hose	2
18	00-891426	Hose	1
19	00-891386	Clamp – Hose	1
20	00-891906-00004	Hose – Grease Out (16 In.)	1
21	00-891386	Clamp – Hose	1
22	00-891906-00003	Hose – Grease In (16 In.)	1
23	00-891906-00006	Hose – Gray Water Out (16 In.)	1
24	00-891386	Clamp – Hose	1
25	00-891906-00005	Hose – Gray Water In (16 In.)	1
26	00-891386	Clamp – Hose	1

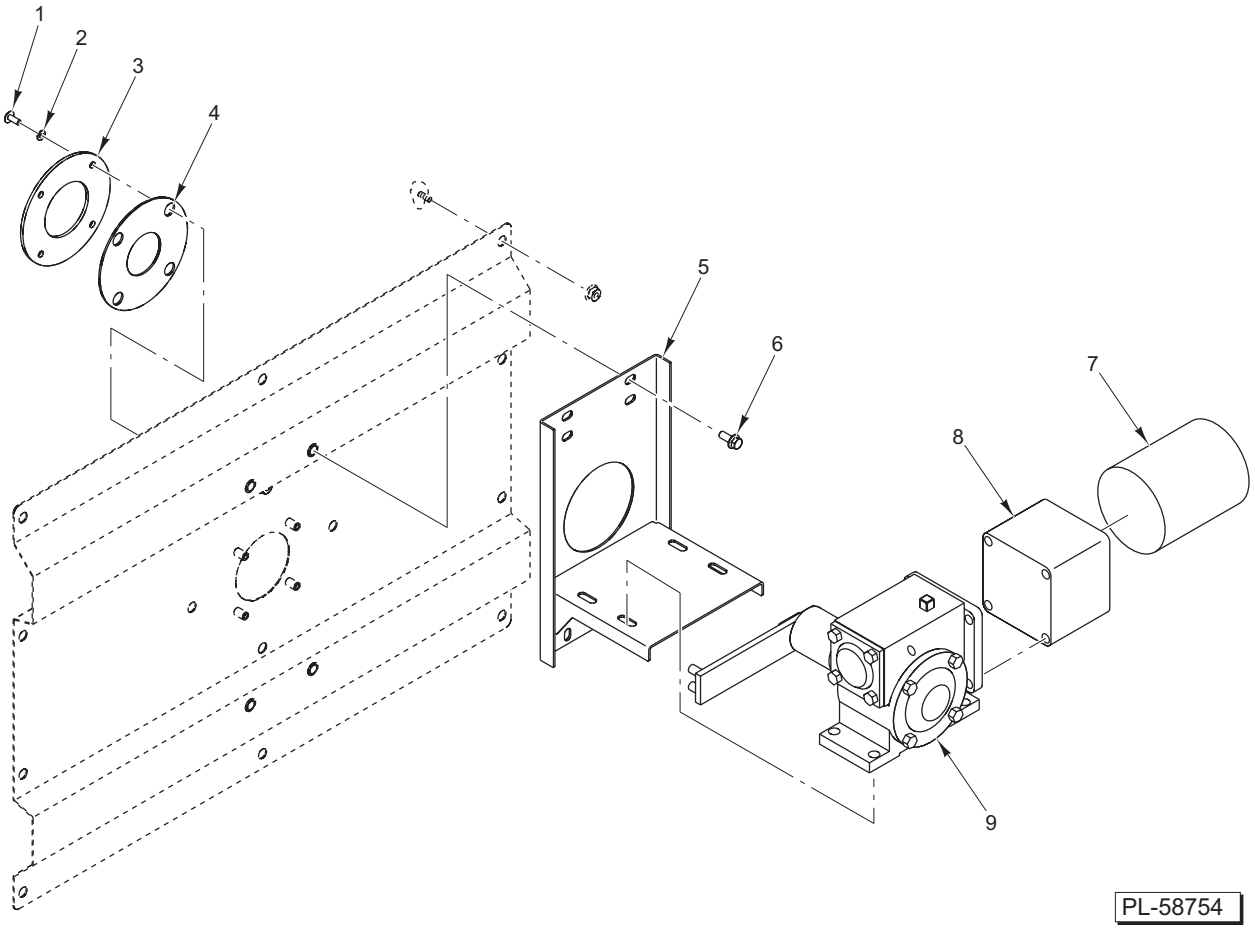

MOTOR ASSEMBLY

MOTOR ASSEMBLY

ILLUS. PL-58754	PART NO.	NAME OF PART	AMT.
1	SC-066-06	Mach. Screw 10-24 x 1/2 Phil. Truss Hd.	4
2	WS-031-54	Washer (Teflon)	4
3	00-891791	Bracket – Drive Motor Gasket	1
4	00-891792	Gasket – Drive Motor (Teflon)	1
5	00-891795	Bracket – Motor	1
6	SC-121-61	Mach. Screw 1/4-20 x 5/8 Hex Washer Hd.	4
7	00-891061	Motor – Drive (With Cap)	1
8	00-891060	Reducer – Gear Speed	1
9	00-891417	Gear Box – Drive Arm	1

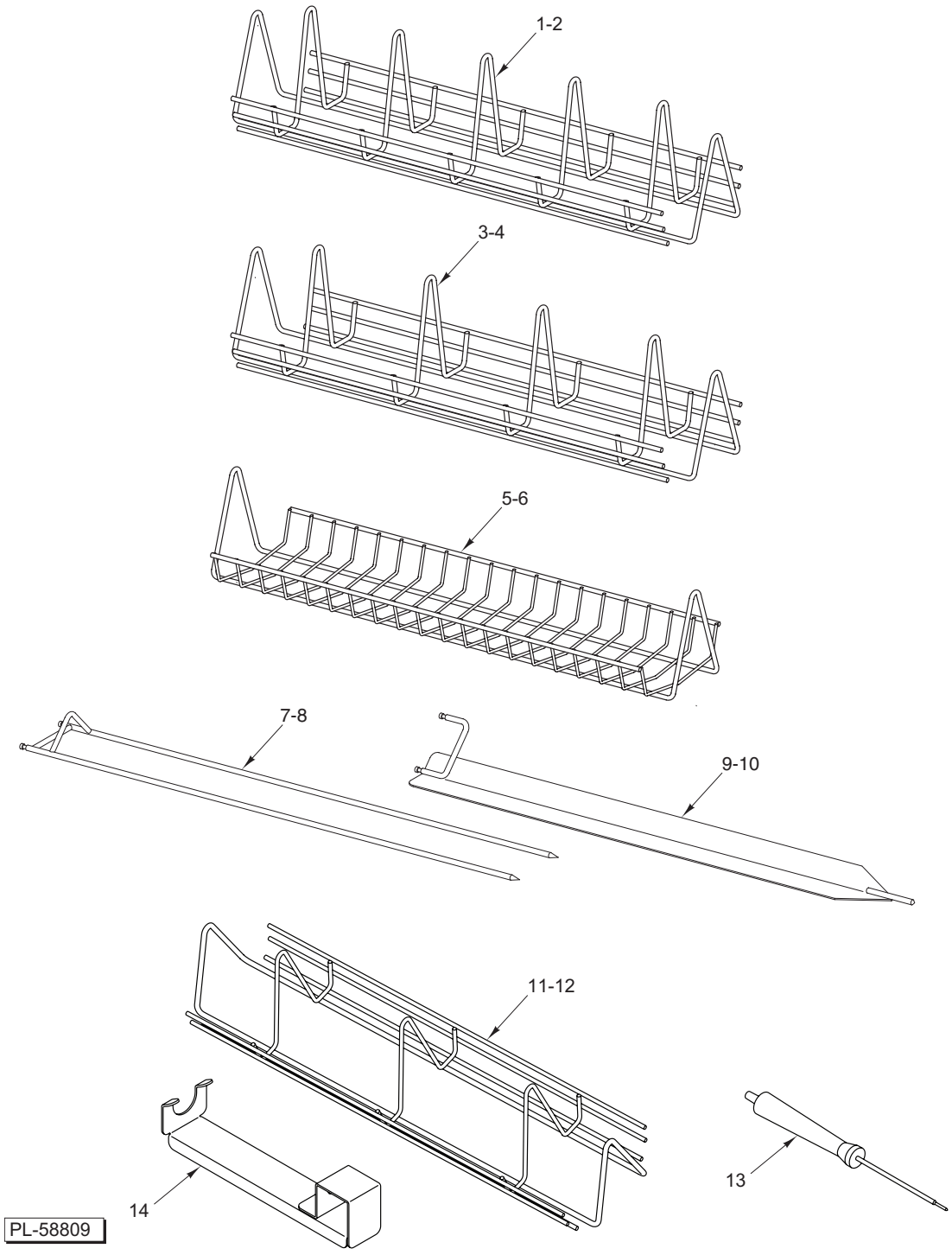

ACCESSORIES

ACCESSORIES

ILLUS. PL-58809	PART NO.	NAME OF PART	AMT.
1	00-425900-00277	Rack – Chicken (Without Pins) (5 Position)	1
2	00-425900-00238	Rack – Chicken (Without Pins) (5 Position) (Coated)	1
3	00-425900-00278	Rack – Chicken (Without Pins) (4 Position)	1
4	00-425900-00239	Rack – Chicken (Without Pins) (4 Position) (Coated)	1
5	00-425900-00276	Basket – Meat (Without Pins)	1
6	00-425900-00237	Basket – Meat (Without Pins) (Coated)	1
7	00-425900-00317	Fork – Meat	1
8	00-425900-00318	Fork – Meat (Coated)	1
9	00-359580	Spit – V	1
10	00-425900-00236	Spit – V (Coated)	1
11	00-891290-00001	Rack – Chicken (3 Position)	1
12	00-891290-00002	Rack – Chicken (3 Position) (Coated)	1
13	00-891280	Probe – Meat Type J Plug In	1
14	00-891283	Holder – Probe Assy.	1
	00-891123-00001	Basket – Wings (Without Pins)	1
	00-425774-00052	Stand – Roll In/Out Spit	1