HOBART

SERVICE

CATALOG OF REPLACEMENT PARTS



HAND WRAP STATIONS

MODELS	
HWS4C	ML-44225

PRIOR MLS COVERED IN THIS CATALOG

HWS1	ML-26395
HWS2	ML-26396
HWS3	ML-44026
HWS4	ML-44049
HWS4	ML-44113

A Product of Hobart Service 701 S. Ridge Ave Troy, OH 45374

FORM F33783 Rev. E (August 2026)

 © HOBART SERVICE 2026

Table of Contents

6 STAND (HWS4C ML-44225)
8 HOT PLATE (6 X 14) & SQUARE CUT-OFF ROD
10 STAND (HWS1 ML-26395, HWS2 ML-26396, HWS3 ML-44026,
12 HOT PLATE (6 X 14) & SQUARE CUT-OFF ROD
14 HOT PLATE (6 X 15) (HWS4 ML-44113 & HWS4C ML-44225)
16 HWS3 & HWS4 CONTROL BOX WITH ON/OFF SWITCH
18 HWS4 CONTROL BOX WITH ON/OFF SWITCH (ROUND CUT-OFF ROD)
20 HWS4 & HWS4C CONTROL BOX WITH TIMER (ROUND CUT-OFF ROD)
22 ROLLERS & FILM CARRIER (ALL HWS MODELS EXCEPT HWS4C)
24 ROLLERS AND FILM SHAFTS (HWS4C ML-44225)
26 SIDE SHELF (WITHOUT PRINTER SUPPORT)
28 SIDE SHELF & PRINTER SUPPORT
30 PACKAGE REST KIT (HWS4 ML-44113 & HWS4C ML-44225)
32 OVERLAY DISPENSER UNIT
34 ULTIMA MOUNTING KIT
36 QUANTUM/HLX MOUNTING KIT
38 ACCESS MOUNTING KIT
40 18VP/18VPS POST ASSEMBLY
42 SP PRINTER MOUNT
44 LIBRARY SUPPORT - POST ASSEMBLY
46 GT/GTX SCALE MOUNTING KIT
48 PLU LIBRARY
50 MISCELLANEOUS

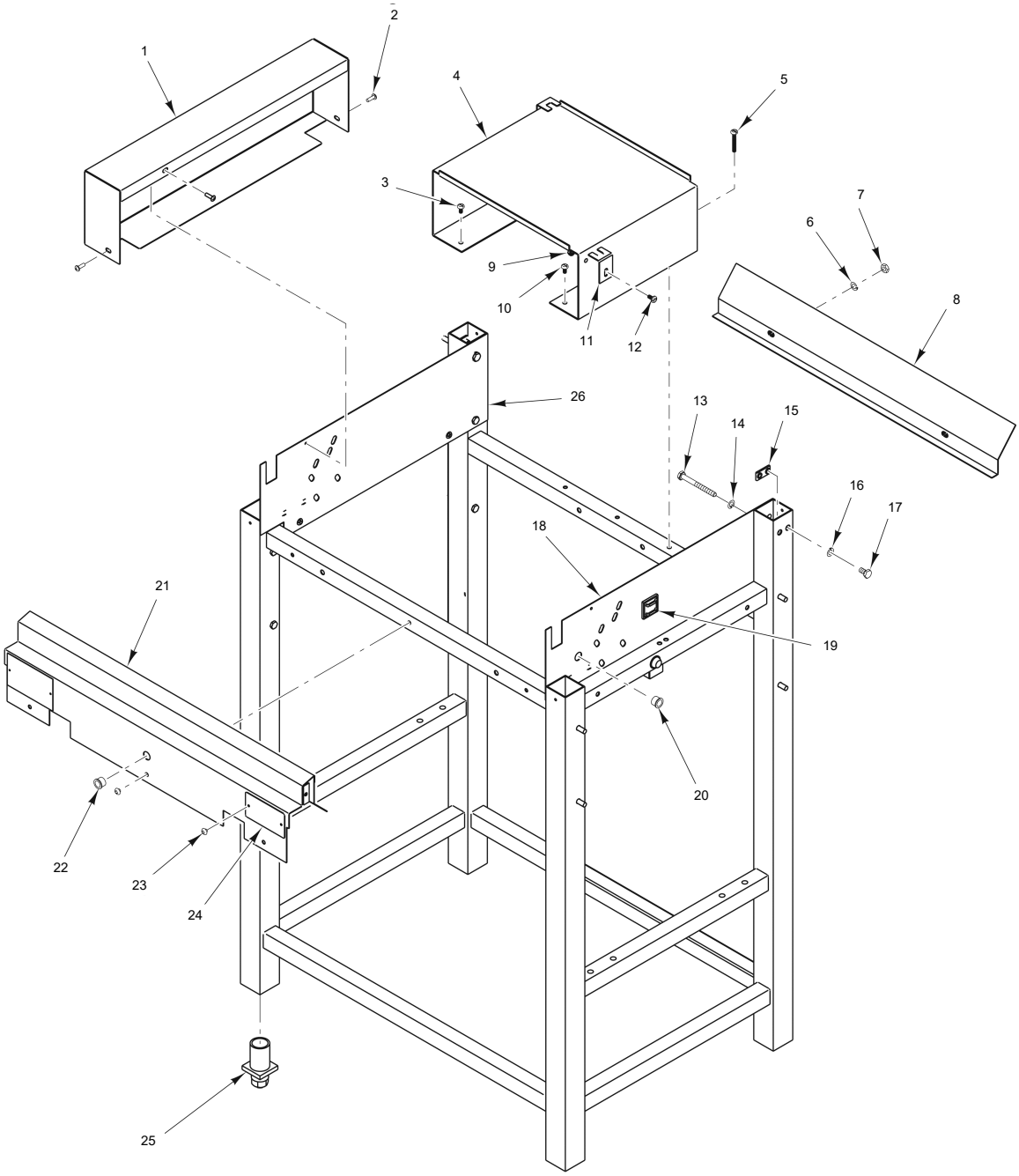

STAND
(HWS4C ML-44225)

STAND
(HWS4C ML-44225)

ILLUS. PL-59591	PART NO.	NAME OF PART	AMT.
1	00-334106	Cover - LH Side	1
2	SC-093-04	Mach. Screw 8-32 x 1/2 Phil. Pan Hd. (SST)	3
3	SC-093-21	Mach. Screw 10-32 x 3/8 Slotted Pan Hd. (SST)	1
4	00-446469-00011	Bracket - Scale Mounting	1
5	SC-109-79	Mach. Screw 10-32 x 1-1/4 Slotted Pan Hd. (SST)	2
6	WL-006-17	Lockwasher 1/4 Helical (SST)	2
7	NS-015-01	Nut 1/4-20 Hex (SST)	2
8	00-334692	NLA - Obsolete--Guard - Element Wire (HWS3 & All HWS4 Models)	1
9	NS-032-05	Lock Nut 10-32	2
10	SC-093-21	Mach. Screw 10-32 x 3/8 Slotted Pan Hd. (SST)	1
11	00-183648	Clamp	2
12	SC-093-21	Mach. Screw 10-32 x 3/8 Slotted Pan Hd. (SST)	2
13	SC-118-57	Cap Screw 1/4-20 x 21/2 Hex Hd	2
14	WL-006-17	Lockwasher 1/4 Helical (SST)	2
15	00-334095	NLA - Obsolete--Nut - Weld	2
16	WL-006-17	Lockwasher 1/4 Helical (SST)	2
17	SC-041-50	Cap Screw 1/4-20 x 1/2 Hex Hd. (SST)	2
18	00-334104	Plate - Side (RH)	1
19	00-446469-00004	Platform - Mounting (Nylon)	1
20	FE-016-31	Bushing - Snap	1
21	00-334288	Cover Assy. - Control Housing	1
22	FE-016-31	Bushing - Snap	1
23	SD-033-56	Self-Tapping Screw 3/16 Lg. Rd. Hd. (SST)	2
24	00-438131-00007	Plate - Caution	1
25	00-446469-00005	Foot - Insert	4
26	00-334284	Plate - Side (LH)	1

(HWS1 ML-26395, HWS2 ML-26396)

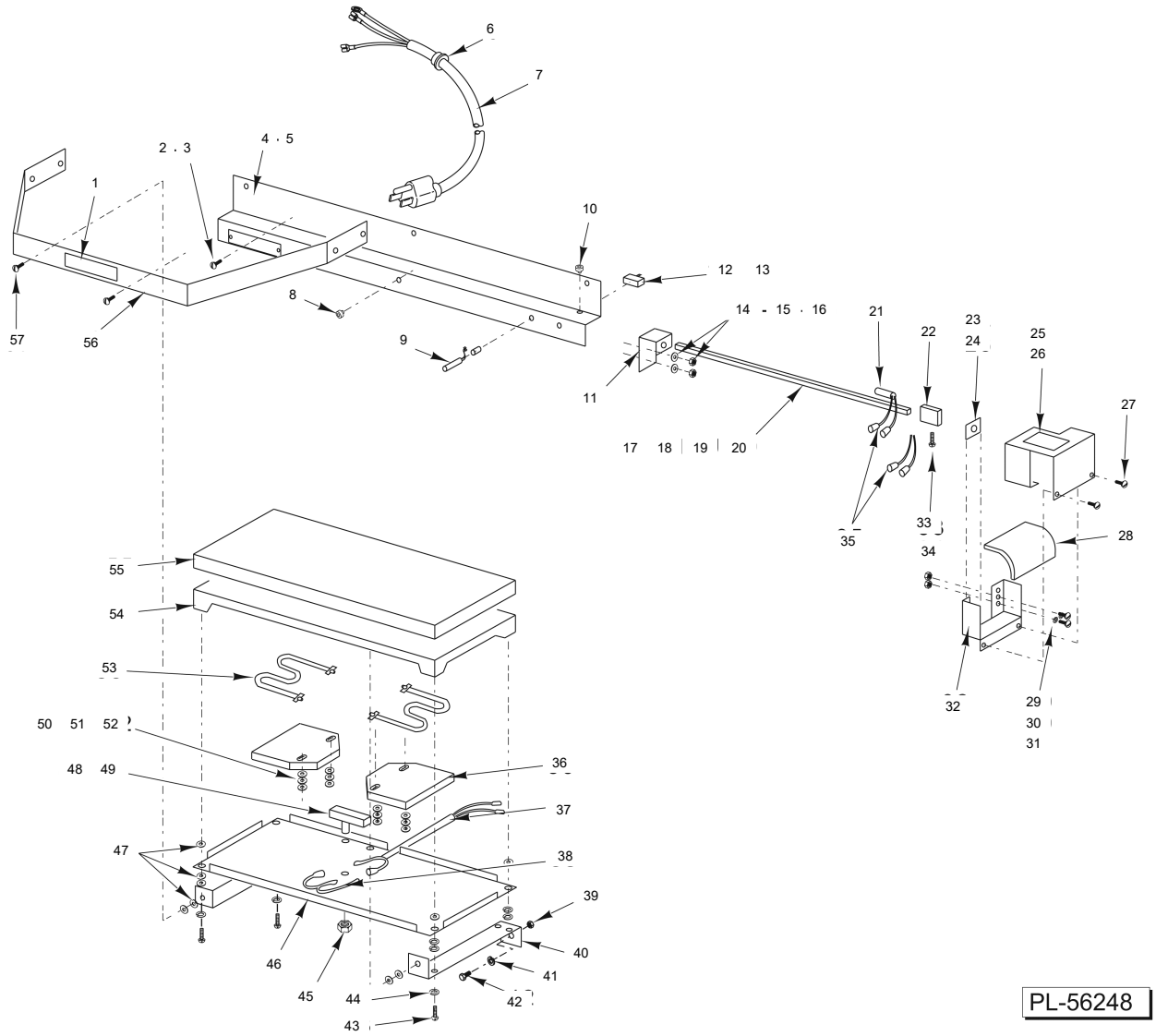

HOT PLATE
(6 X 14) & SQUARE CUT-OFF ROD

HOT PLATE
(6 X 14) & SQUARE CUT-OFF ROD

ILLUS. PL-5547	PART NO.	NAME OF PART	AMT.
1	00-252217-00001	Logo - Hobart	1
2	SC-008-09	Mach. Screw 10-24 x 3/8 Rd. Hd.	4
3	WL-008-13	Lockwasher #10 Internal Shakeproof	4
4	00-333234	NLA - Obsolete--Cover - Control Housing (HWS1)	1
5	00-334288	Cover - Control Housing (HWS2)	1
6	FE-007-21	Bushing - Strain Relief	1
7	00-333237	Cord - Power	1
8	00-333700	Bushing - Snap	1
9	00-332950	Indicator - Light (Round)	1
10	00-333700	Bushing - Snap	1
11	00-333238	Bracket - Element Support	1
12	00-332951	Switch - On/Off	1
13	00-333701	Wire - Switch (Power)	2
14	NS-009-22	Nut 10-24 Hex	2
15	WL-008-13	Lockwasher #10 Internal Shakeproof	2
16	SC-008-10	Mach. Screw 10-24 x 1/2 Slotted Rd. Hd.	2
17	00-334662	Element - Cartridge (Square) (HWS2) (120 V.) (243/4)	1
18	00-332953	Element - Cartridge (Square) (HWS1) (120 V.) (23 1/4)	2
19	00-184816	Element - Cartridge (Square) (HWS1) (220 V.) (23 1/2)	1
20	00-184433	Element - Cartridge (Square) (HWS2) (220 V.) (243/4)	1
21	00-332959	Element - Thermostat	1
22	00-332831	Adapter - Thermostat	1
23	00-332955	Adapter - Element (R.S. Only) (HWS1)	1
24	00-333674	Adapter - Element (R.S. Only) (HWS2)	1
25	00-333672	Cover - Support Housing (HWS2)	1
26	00-333010	Cover - Support Housing (HWS1)	1
27	SC-008-10	Mach. Screw 10-24 x 1/2 Slotted Rd. Hd.	2
28	00-332946	NLA - Obsolete--Insulator - Cover	1
29	SC-008-10	Mach. Screw 10-24 x 1/2 Slotted Rd. Hd.	2
30	WL-008-13	Lockwasher #10 Internal Shakeproof	2
31	NS-009-22	Nut 10-24 Hex	2
32	00-333673	Housing - Element Support	1
33	SC-088-75	Set Screw 6-32 x 5/16 Hex Hdls., Cup Pt.	1
34	00-333689	Speed Nut #6	1
35	FE-006-17	Wire Nut (16-22 Ga.)	4
36	00-333675	Plate - Element	2
37	00-334854	Wire Assy. (Terminal Strip to Thermostat & Element)	
38	00-334857	Wire Assy. (Thermostat to Element)	
39	NS-013-02	Nut 1/4-20 Hex	4
40	00-333685	Bracket - Seal Plate Mtg.	2
41	WL-003-39	Lockwasher 1/4 Light	4
42	SC-037-84	Cap Screw 1/4-20 x 11/2 Hex Hd.	4
43	SC-060-03	Mach. Screw 10-24 x 3/4 Slotted Rd. Hd.	4
44	WL-008-13	Lockwasher #10 Internal Shakeproof	4
45	00-084706	Knob - Thermostat	1
46	00-333239	Backplate - Sealing	1
47	00-332949	Insulator	12
48	00-334659	Thermostat (Short Stem)	1
49	SC-032-08	Mach. Screw 6-32 x 3/16 Slotted Bndg. Hd. (Brass)	2
50	SD-012-02	Self-Tapping Screw 6-32 x 3/8 Slotted Pan Hd., Type T	4
51	WL-008-01	Lockwasher #6 Internal Shakeproof	4
52	WS-028-03	Washer (SST)	4
53	00-332939	Element - Heating (120 V.)	2
54	00-332836	Plate - Hot	1
55	00-334588	Cover - Hot Plate (non-stick) 6 x 14	1
56	00-333392	NLA - Obsolete--Guard - Sealing Plate	1
57	SC-008-10	Mach. Screw 10-24 x 1/2 Slotted Rd. Hd.	6

HWS4

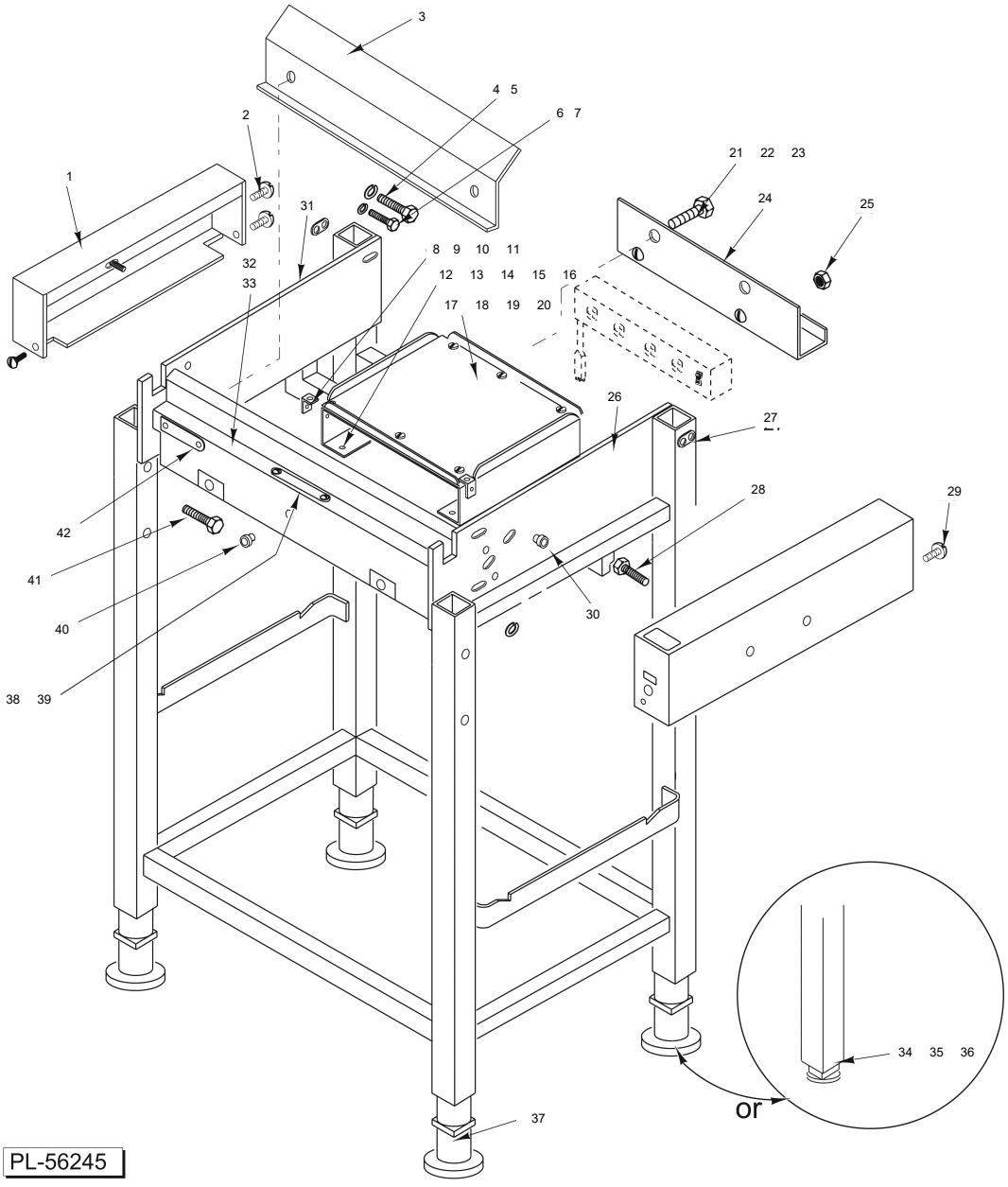

STAND
(HWS1 ML-26395, HWS2 ML-26396, HWS3 ML-44026,

STAND
(HWS1 ML-26395, HWS2 ML-26396, HWS3 ML-44026,

ILLUS. PL-56245	PART NO.	NAME OF PART	AMT.
1	00-334106	Cover - LH Side (HWS3 & HWS4)	1
2	SD-019-31	Self-Tapping Screw 8-18 x 1/2 Phil. Pan Hd., Type B	4
3	00-334692	NLA - Obsolete--Guard - Element Wire (HWS3 & All HWS4 Models)	1
4	WL-006-17	Lockwasher 1/4 Helical	4
5	SC-118-57	Cap Screw 1/4-20 x 21/2 Hex Hd	4
6	SC-041-50	Cap Screw 1/4-20 x 1/2 Hex Hd. (SST)	2
7	WL-006-17	Lockwasher 1/4 Helical	2
8	00-183648	Clamp	2
9	SC-008-10	Mach. Screw 10-24 x 1/2 Slotted Rd. Hd.	2
10	WL-008-13	Lockwasher #10 Internal Shakeproof	2
11	NS-009-22	Nut 10-24 Hex	2
12	00-048831	Bracket - Scale Mounting	1
13	SC-117-03	Mach. Screw 10-24 x 11/4 Rd. Hd. Slotted	4
14	SC-008-10	Mach. Screw 10-24 x 1/2 Slotted Rd. Hd.	4
15	WL-008-13	Lockwasher #10 Internal Shakeproof	4
16	NS-009-22	Nut 10-24 Hex	4
17	00-334690	Retainer - Scale (11.125 x 9.125)	1
18	WL-008-13	Lockwasher #10 Internal Shakeproof	4
19	NS-009-22	Nut 10-24 Hex	6
20	SC-008-10	Mach. Screw 10-24 x 1/2 Slotted Rd. Hd.	6
21	SC-041-07	Cap Screw 1/4-20 x 11/2 Hex Hd	2
22	WL-006-17	Lockwasher 1/4 Light	2
23	NS-015-01	Nut 1/4-20 Hex	2
24	00-333977	Bracket - Outlet Strip	1
25	NS-044-07	Mach. Nut 8-32 Hex KEPS	2
26	00-334104	Plate - Side (RH)	1
27	00-334095	NLA - Obsolete--Nut - Weld	2
28	SC-118-57	Cap Screw 1/4-20 x 21/2 Hex Hd	4
29	SD-019-31	Self-Tapping Screw 8-18 x 1/2 Phil. Pan Hd., Type B	3
30	FE-016-31	Bushing - Snap (HWS3 & HWS4)	1
31	00-334284	Plate - Side (LH) (HWS3 & HWS4)	1
32	00-334288	Cover - Control Housing (HWS2)	1
33	00-333234	NLA - Obsolete--Cover - Control Housing (HWS1)	1
34	00-333149	Insert - Leveler (1 In. Leg) (HWS1 & HWS2)	4
35	NS-017-16	Nut - Jam 3/8-16 Hex Hd. (HWS1 & HWS2)	4
36	00-333148	NLA - Obsolete--Adjustable Foot (1 In. Leg) (HWS1 & HWS2)	4
37	00-334100	Foot - Adjustable (HWS3 & HWS4)	4
38	00-438131-00007	Plate - Caution (HWS3 & HWS4)	1
39	SD-005-39	Self-Tapping Screw 4 x 1/4 Rd. Hd., Type U	2
40	00-333700	Bushing - Snap (HWS1 & HWS2)	1
41	SC-062-57	Cap Screw 1/4-20 x 2 Hex Hd.	4
42	SD-005-39	Self-Tapping Screw Rd. Hd., Type U	2

(HWS3 ML-44026 & HWS4 ML-44049)

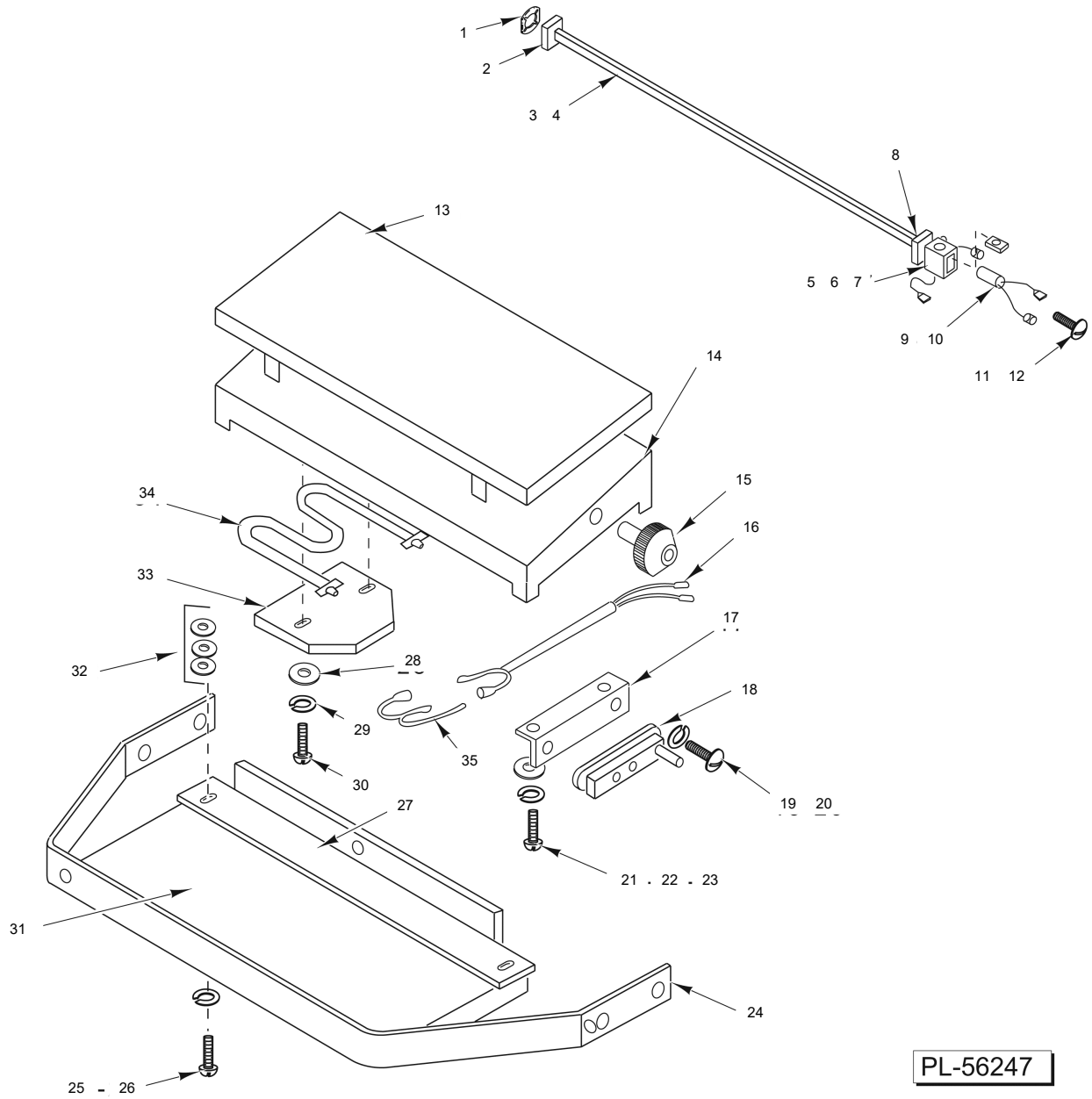

HOT PLATE
(6 X 14) & SQUARE CUT-OFF ROD

HOT PLATE
(6 X 14) & SQUARE CUT-OFF ROD

ILLUS. PL-56247	PART NO.	NAME OF PART	AMT.
1	00-334702	Retainer - Push-On	1
2	00-334691	Adapter - Element (L.S. Only)	1
3	00-334662	Element - Cartridge (Square) (120 V.) (243/4)	1
4	00-184433	Element - Cartridge (Square) (220 V.) (243/4)	1
5	SC-088-75	Set Screw 6-32 x 5/16 Hex Hdls., Cup Pt.	1
6	00-332831	Adapter - Thermostat	1
7	00-333689	Speed Nut #6	1
8	00-332955	Adapter - Element (R.S. Only)	1
9	00-332959	Element - Thermostat	1
10	FE-006-17	Wire Nut (16-22 Ga.)	1
11	SC-008-10	Mach. Screw 10-24 x 1/2 Slotted Rd. Hd.	2
12	WL-008-13	Lockwasher #10 Internal Shakeproof	2
13	00-334587	Cover - Hot Plate (non-stick) 6 x 14	1
14	00-334091	Hot Plate (Slanted)	1
15	00-084706	Knob - Thermostat	1
16	00-334854	Wire Assy. (Thermostat Strip to Thermostat & Element)	
17	00-334090	Bracket - Thermostat	1
18	00-334660	Thermostat (Long Stem)	1
19	WL-008-01	Lockwasher #6 Internal Shakeproof	2
20	SC-009-79	Mach. Screw 6-32 x 5/16 Slotted Rd. Hd.	2
21	SD-012-02	Self-Tapping Screw 6-32 x 3/8 Slotted Pan Hd., Type T	2
22	WL-008-01	Lockwasher #6 Internal Shakeproof	2
23	WS-028-03	Washer (SST)	2
24	00-334305	Guard - Hot Plate	1
25	WL-004-40	Lockwasher #10 Helical	4
26	SC-060-03	Mach. Screw 10-24 x 3/4 Slotted Rd. Hd.	4
27	00-334693	Guard - Hot Plate (Rear)	1
28	WS-028-03	Washer (SST)	4
29	WL-008-01	Lockwasher #6 Internal Shakeproof	4
30	SD-012-02	Self-Tapping Screw 6-32 x 3/8 Slotted Pan Hd., Type T	4
31	00-334094	Bracket - Hot Plate Support	1
32	00-332949	Insulator	12
33	00-333675	Plate - Element	1
34	00-332939	Element - Heating (120 V.)	2
35	00-334857	Wire Assy. (Thermostat to Element)	

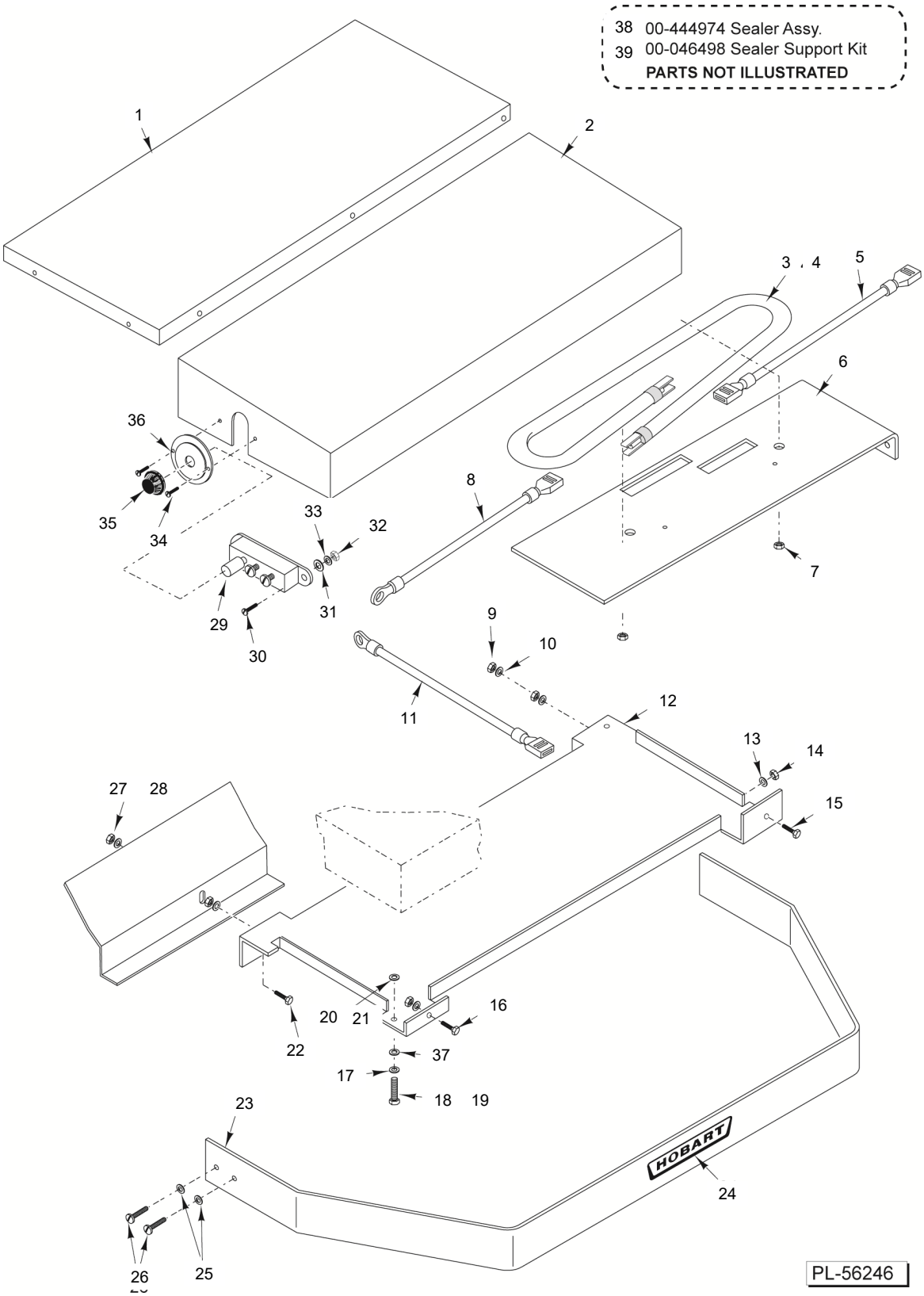

HOT PLATE
(6 X 15)
(HWS4 ML-44113 & HWS4C ML-44225)

HOT PLATE
(6 X 15)
(HWS4 ML-44113 & HWS4C ML-44225)

ILLUS. PL-56246	PART NO.	NAME OF PART	AMT.
1	00-130585-00001	Cover - (non-stick) 6 x 15	1
2	00-446731-00001	Housing - Hot Plate (Sheet Metal Formed)	1
3	00-334294	Element - Hot Plate (115 V.)	1
4	00-334293	Element - Hot Plate (220 V.)	1
5	00-440925	Wire Assy. (Element to Terminal Strip) (34 In.)	1
6	00-444952	Mounting - Element	1
7	NS-015-01	Nut 1/4-20 Hex (SST)	2
8	00-440923	Wire Assy. (Thermostat to Element) (61/2 In.)	1
9	NS-015-01	Nut 1/4-20 Hex (SST)	AR
10	WL-006-17	Lockwasher 1/4 Helical (SST)	AR
11	00-440924	Wire Assy. (Thermostat to Terminal Strip) (36 In.)	1
12	00-046494	Sealer - Support Plate	1
13	WL-006-01	Lockwasher #8 (SST)	AR
14	NS-011-12	Nut 8-32 Hex	AR
15	SC-093-04	Mach. Screw 8-32 x 1/2 Phil. Pan Hd. (SST)	AR
16	SC-093-04	Mach. Screw 8-32 x 1/2 Phil. Pan Hd. (SST)	AR
17	WL-006-17	Lockwasher 1/4 Medium (HWS4 With Aluminum Hot Plate Casting)	AR
18	SC-041-05	Cap Screw 1/4-20 x 5/8 Hex Hd. (HWS4 With Aluminum Hot Plate Casting)	AR
19	SC-123-89	Mach. Screw 10-32 x 3/4 Slotted Washer Hd. (SST)	4
20	00-334416	Insulator - Washer (HWS4 With Aluminum Hot Plate Casting)	12
21	00-442348	Insulator - Washer (Used With Sheet Metal Formed Hot Plate)	10
22	SC-062-57	Cap Screw 1/4-20 x 2 Hex Hd.	AR
23	00-334305	Guard Assy. (Incls. Item 24)	1
24	00-252217-00001	Logo (Without Holes)	1
25	WL-004-40	Lockwasher #10 Helical	2
26	SC-093-21	Mach. Screw 10-32 x 3/8 Slotted Pan Hd. (SST)	2
27	NS-015-01	Nut 1/4-20 Hex (SST)	AR
28	WL-006-17	Lockwasher 1/4 Helical (SST)	AR
29	00-334659	Thermostat (Short Stem)	1
30	SC-021-11	Mach. Screw 6-32 x 3/4 Slotted Rd. Hd. (SST)	2
31	WS-028-03	Washer (SST)	2
32	NS-011-07	Nut 6-32 Hex (SST)	2
33	WL-006-42	Lockwasher #6 Helical (SST)	AR
34	SD-033-56	Self-Tapping Screw 3/16 Rd. Hd., Type U (HWS4 With Aluminum Hot Plate Casting)	2
35	00-444950	Knob - Thermostat	1
36	00-046496	Plate - Dial (HWS4 With Aluminum Hot Plate Casting)	1
37	WS-029-05	Washer - 3/8 X 3/4 X 1/16 SST	AR
38	00-444974	Sealer Assy. (Incls. Items 1, 2, 3, 5 thru 8, 11, 29 thru 33, & 35)	1
39	00-046498	Sealer Support Kit (Incls. Items 9, 10, 12 thru 18, 20, 22, 27, & 28)	1

(SQUARE CUT-OFF ROD) (HWS3 ML-44026 & HWS4 ML-44049)

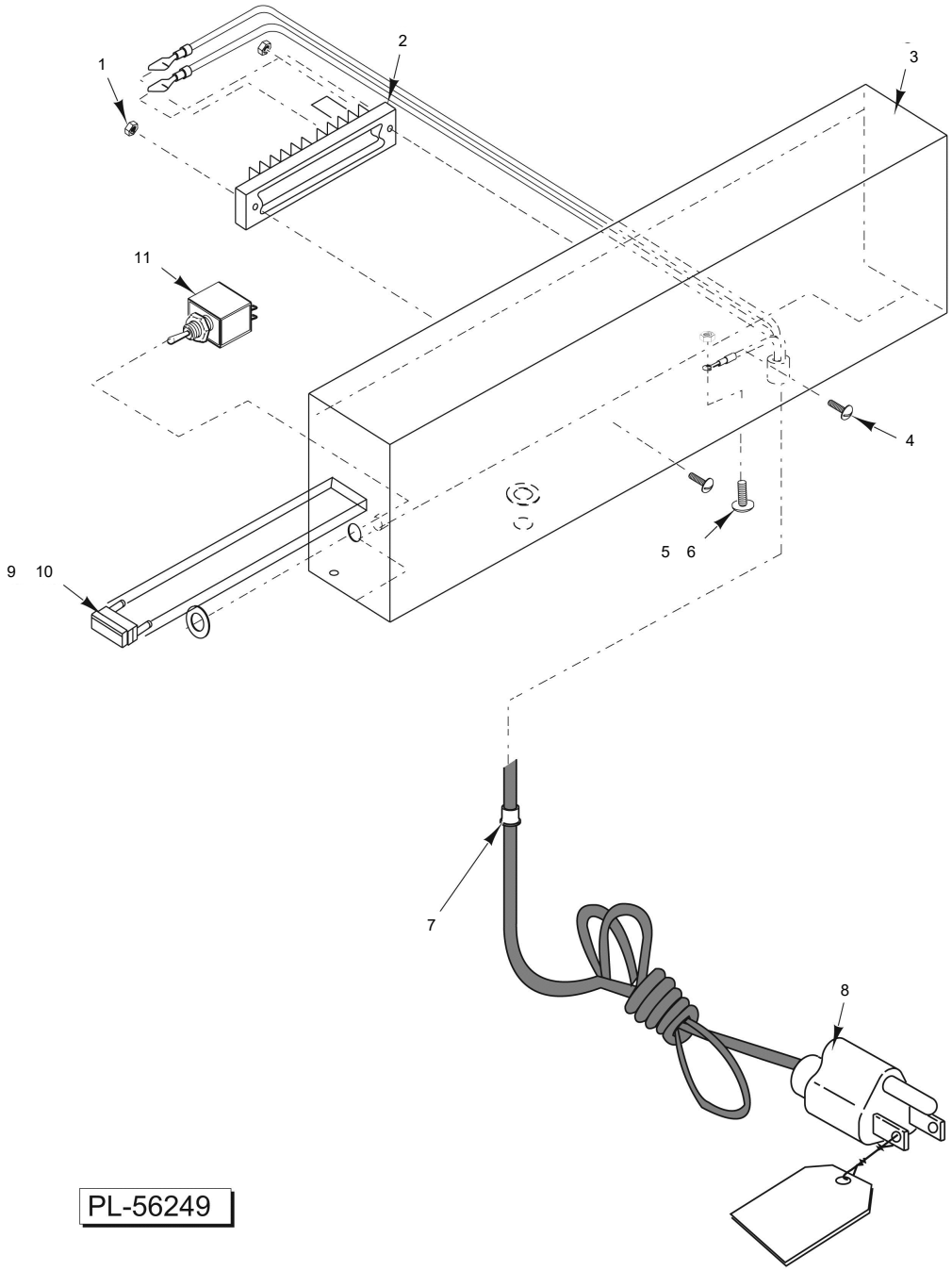

HWS3 & HWS4 CONTROL BOX WITH ON/OFF SWITCH

HWS3 & HWS4 CONTROL BOX WITH ON/OFF SWITCH

ILLUS. PL-56249	PART NO.	NAME OF PART	AMT.
1	NS-048-19	Nut Assy. 10-32 KEPS (SST)	2
2	00-333235	Strip - Terminal	1
3	00-334105	NLA - Obsolete--Cover - RH Side	1
4	SC-066-20	Mach. Screw 10-32 x 1/2 Phil. Truss Hd. (SST)	2
5	SC-009-67	Mach. Screw 6-32 x 5/8 Slotted Rd. Hd.	1
6	NS-009-07	Mach. Nut 6-32 Hex (SST)	1
7	FE-025-53	Bushing - Strain Relief	1
8	00-442346	Cord - Power Assy. (110 V.)	1
9	00-133320-00005	Light - Pilot Indicator (Rectangle)	1
10	00-332950	Light - Indicator (Round)	1
11	00-332951	Switch - On/Off	1

(ML-44113)

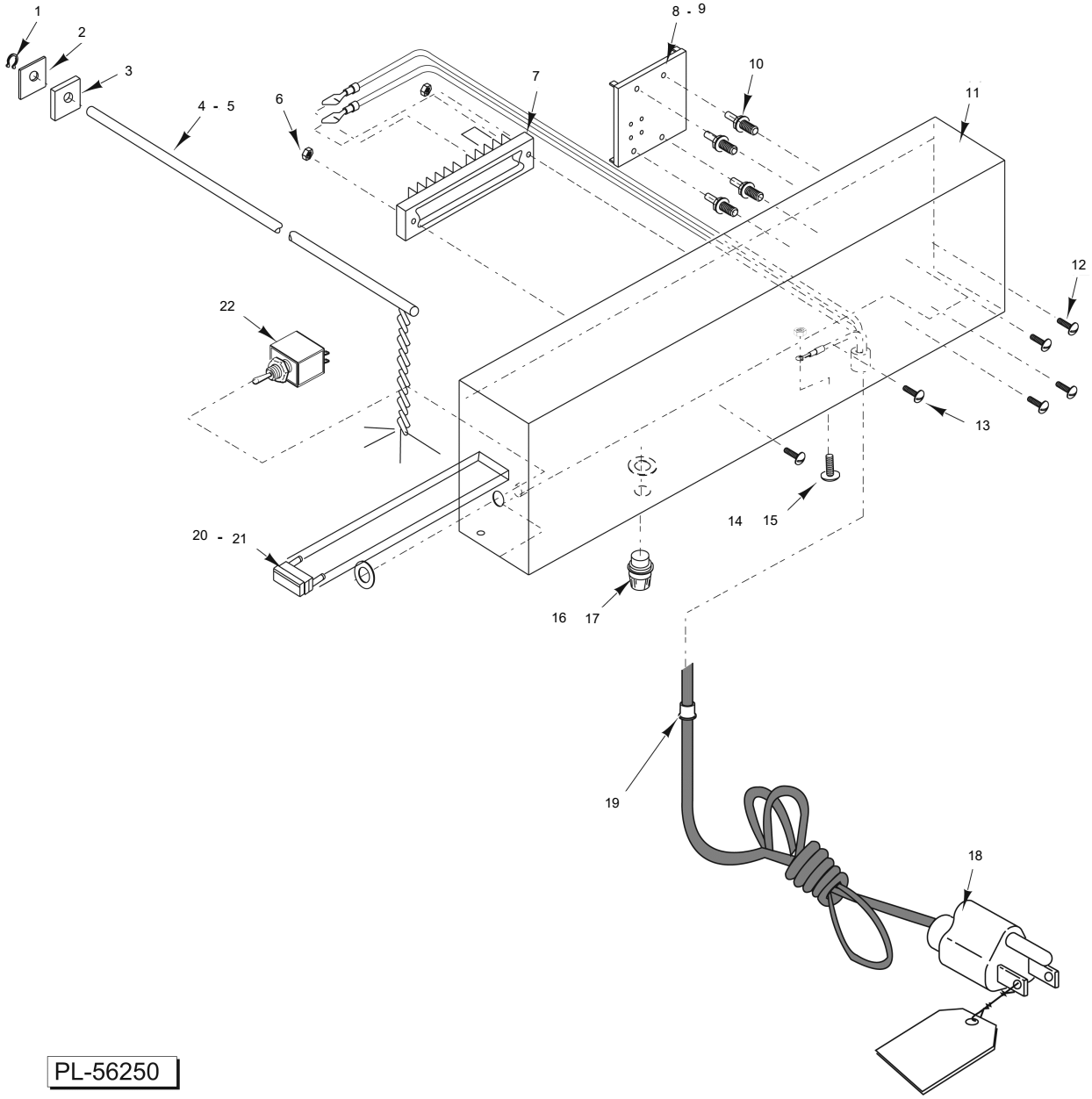

PL-56250

HWS4 CONTROL BOX WITH ON/OFF SWITCH (ROUND CUT-OFF ROD)

HWS4 CONTROL BOX WITH ON/OFF SWITCH (ROUND CUT-OFF ROD)

ILLUS. PL-56250	PART NO.	NAME OF PART	AMT.
1	RR-009-10	Retaining Ring 3/8 In. (SST)	1
2	00-046601	Retainer - Rod (Aluminum)	1
3	00-046601	Retainer - Rod (Aluminum)	1
4	00-134429	Rod - Cut-Off (120 V.)	1
5	00-134431	Rod - Cut-Off (220 V.)	1
6	NS-048-19	Nut Assy. 10-32 KEPS (SST)	2
7	00-333235	Strip - Terminal	1
8	00-132654-00006	Board - Circuit (115 V.)	1
9	00-132654-00013	Board - Circuit (220 V.)	1
10	00-334626	Standoff	4
11	00-334105	NLA - Obsolete--Cover - RH Side	1
12	SD-027-08	Self-Tapping Screw 6-32 x 3/8 Slotted Pan Hd., Plastite	4
13	SC-110-97	Mach. Screw 10-32 x 1/2 Slotted Truss Hd	2
14	SC-110-97	Mach. Screw 10-32 x 1/2 Slotted Truss Hd	1
15	NS-048-19	Nut Assy. 10-32 KEPS (SST)	1
16	FE-022-73	Fuseholder	1
17	FE-022-29	Fuse (1 Amp.) (MDL) (250 V.)	1
18	00-442346	Cord - Power Assy. (110 V.)	1
19	FE-025-53	Bushing - Snap 3/8	1
20	00-133320-00005	Light - Indicator	1
21	00-130445-00050	Light - Indicator (220 V.)	1
22	00-332951	Switch - On/Off	1

(ML-44113 & ML-44225)

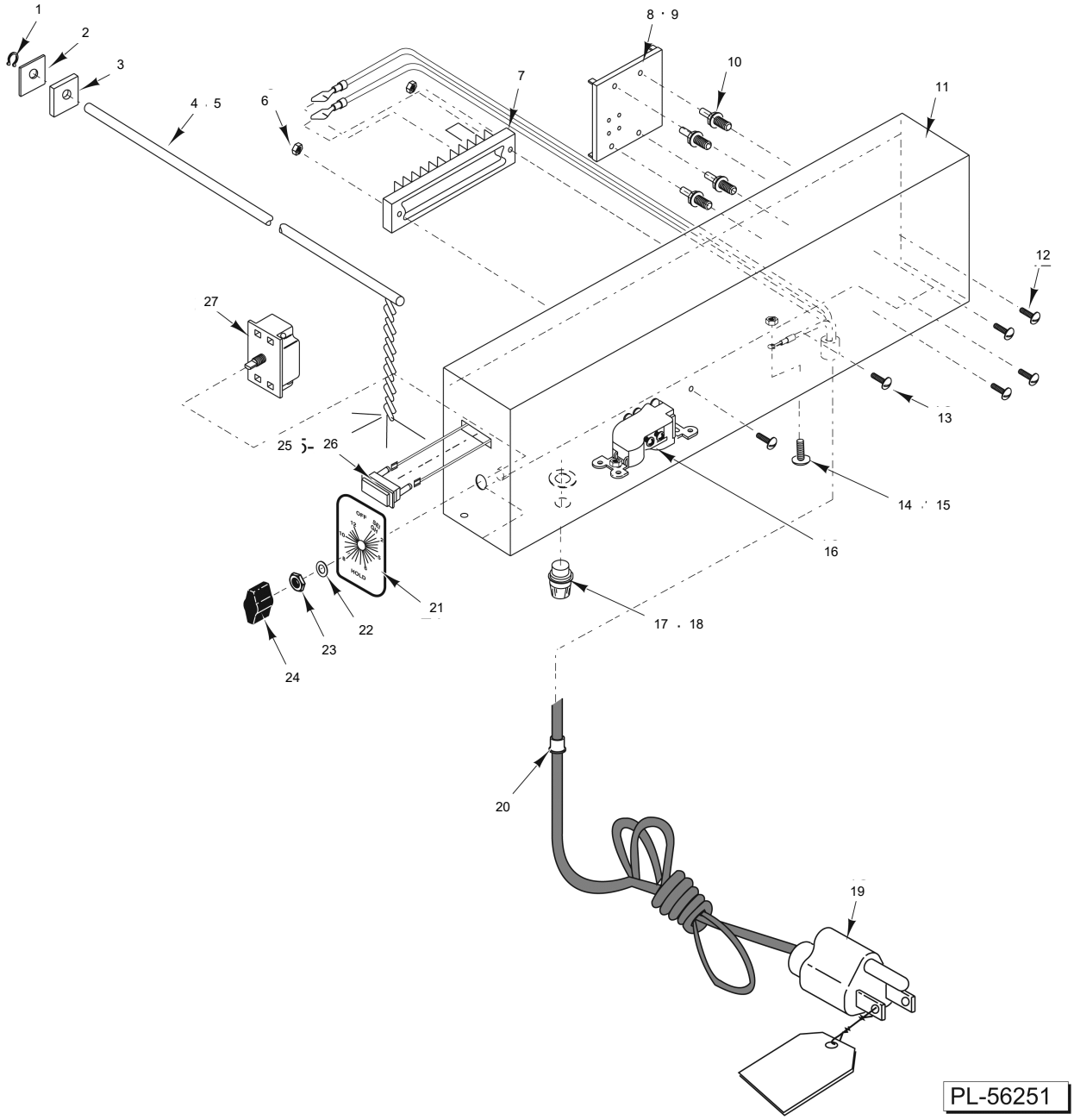

HWS4 & HWS4C CONTROL BOX WITH TIMER (ROUND CUT-OFF ROD)

HWS4 & HWS4C CONTROL BOX WITH TIMER (ROUND CUT-OFF ROD)

ILLUS. PL-56251	PART NO.	NAME OF PART	AMT.
1	RR-009-10	Retaining Ring 3/8 In. (SST)	1
2	00-046601	Retainer - Rod (Aluminum)	1
3	00-046601	Retainer - Rod (Aluminum)	1
4	00-134429	Rod - Cut-Off (120 V.)	1
5	00-134431	Rod - Cut-Off (220 V.)	1
6	NS-048-09	Mach. Nut 10-32 Hex KEPS	2
7	00-333235	Strip - Terminal	1
8	00-132654-00006	Board - Circuit (115 V.)	1
9	00-132654-00013	Board - Circuit (220 V.)	1
10	00-334626	Standoff	4
11	00-441782	Cover - RH Side	1
12	SD-027-08	Self-Tapping Screw 6-32 x 3/8 Slotted Pan Hd., Plastite	4
13	SC-110-97	Mach. Screw 10-32 x 1/2 Slotted Truss Hd	2
14	SC-110-97	Mach. Screw 10-32 x 1/2 Slotted Truss Hd	1
15	NS-048-19	Nut Assy. 10-32 KEPS (SST)	1
16	00-441790	Receptacle - Duplex	1
17	FE-022-73	Fuseholder	1
18	FE-022-29	Fuse (1 Amp.) (MDL) (250 V.)	1
19	00-442346	Cord - Power Assy. (110 V.)	1
20	FE-025-53	Bushing - Strain Relief	1
21	00-446729-00003	Decal - Timer	1
22	WL-019-04	Lockwasher 3/8 Internal	1
23		Nut 3/8-32 Thin (Included with Item 27, Timer)	1
24	00-441788	Knob - Control Timer	1
25	00-133320-00005	Light - Indicator (120 V.)	1
26	00-130445-00050	Light - Indicator (220 V.)	1
27	00-441791	Timer - 12 Hr. (Incls. Items 22, 23, & 24)	1

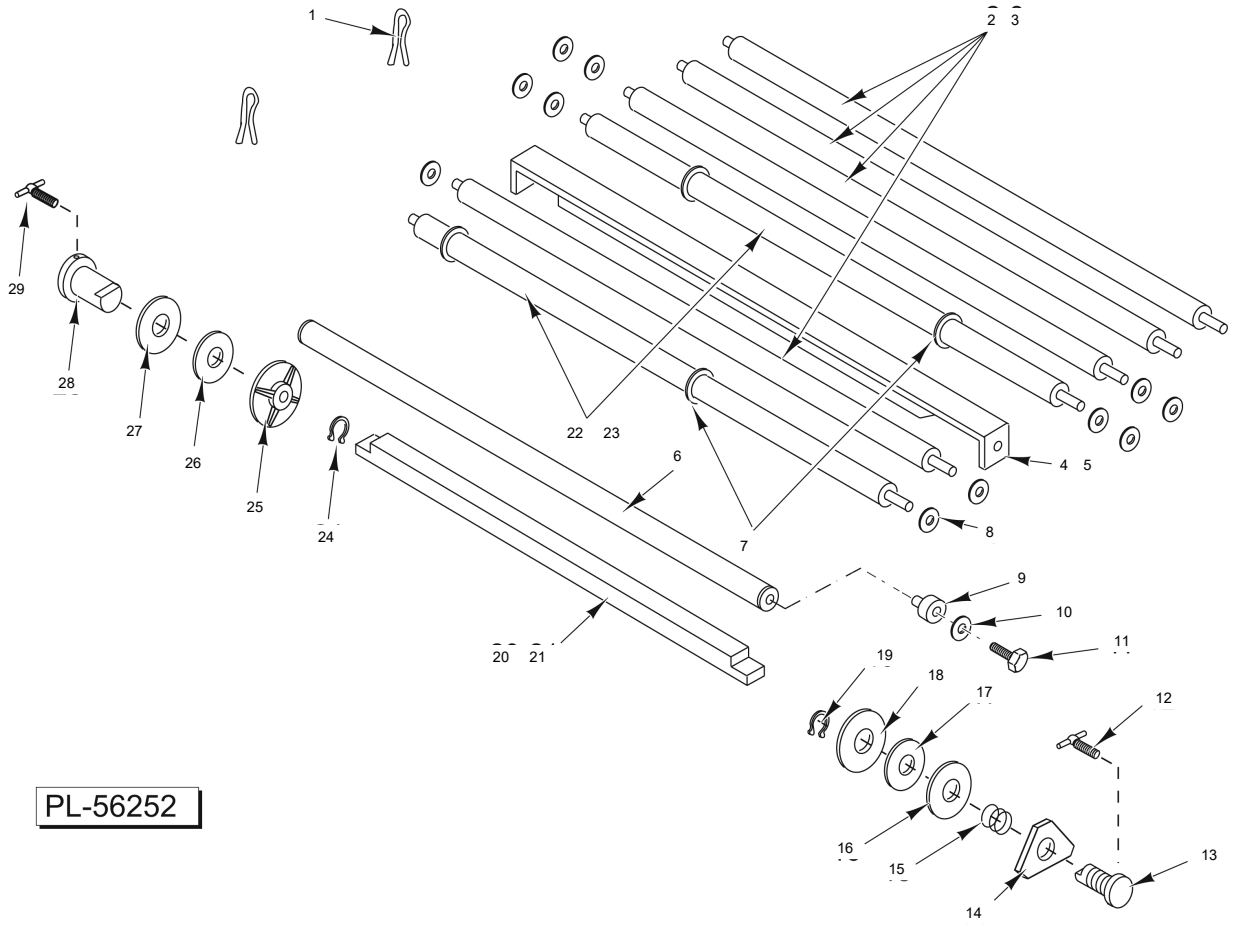

ROLLERS & FILM CARRIER
(All HWS Models except HWS4C)

ROLLERS & FILM CARRIER
(All HWS Models except HWS4C)

ILLUS. PL-56252	PART NO.	NAME OF PART	AMT.
1	PC-005-12	Pin - Cotter 3/32 Dia. x 3 In. Lg.	4
2	00-442387	Roller - Spring (HWS3 & HWS4) (225/8 In.)	4
3	00-332943	Roller - Spring (HWS1 & HWS2) (245/8 In.)	4
4	00-332835	Retainer - Film (HWS1 & HWS2)	1
5	00-442388	Retainer - Film (HWS3 & HWS4)	1
6	00-332942	Roller - Film Guide (HWS1 & HWS2) (221/2 In.)	1
7	00-442098	O-Ring	4
8	00-442097	Spacer - Nylon (Black)	10
9	00-332945	Bushing (HWS1 & HWS2)	2
10	WL-003-38	Lockwasher 1/4 (HWS1 & HWS2)	2
11	SC-036-13	Cap Screw 1/4-20 x 3/4 Hex Hd. (HWS1 & HWS2)	2
12	00-332952	Screw - Bar Slide	2
13	00-332829	Sleeve - Threaded	2
14	00-333247	Disc - Adjusting	2
15	00-332834	Spring - Compression	2
16	00-333363	D - Washer	2
17	00-332833	Washer - Film Brake	2
18	00-333248	Brake - Core	2
19	RR-011-06	Retaining Ring	2
20	00-334784	Rod - Film Carrier (HWS2, HWS3, & HWS4) (265/8 In.)	2
21	00-332828	Rod - Film Carrier (HWS1) (243/4 In.)	2
22	00-442099	Roller - Film Feed (HWS3 & HWS4) (225/8 In.)	2
23	00-333687	Roller - Film Feed (HWS1 & HWS2) (255/8 In.)	2
24	RR-011-06	Retaining Ring	2
25	00-333248	Brake - Core	2
26	00-332833	Washer - Film Brake	2
27	00-333363	Washer - D Film Core	2
28	00-333686	Sleeve - Plain	2
29	00-332952	Screw - Bar Slide	2
	00-332948	Brake Core Assy. (Incls. Items 24 thru 29)	2
	00-332944	Adjusting Core Assy. (Incls. Items 12 thru 19)	2

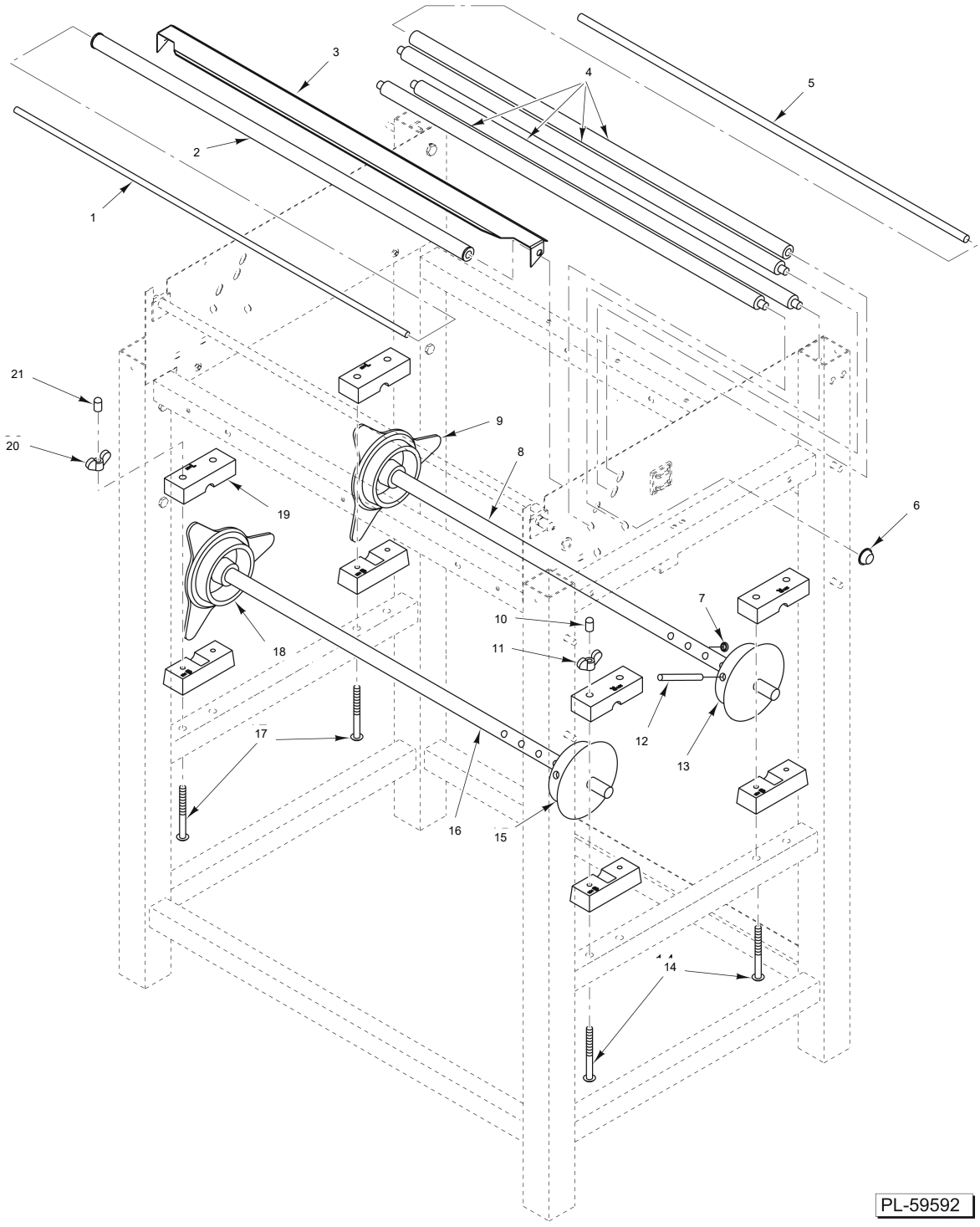

ROLLERS AND FILM SHAFTS
(HWS4C ML-44225)

ROLLERS AND FILM SHAFTS
(HWS4C ML-44225)

ILLUS. PL-59592	PART NO.	NAME OF PART	AMT.
1	00-446469-00006	Shaft - Roller	1
2	00-446469-00012	Roller (With Bearings)	1
3	00-442388	Retainer - Film	1
4	00-446469-00012	Roller (With Bearings)	5
5	00-446469-00006	Shaft - Roller	5
6	00-046645	Retainer - Shaft	12
7	00-030929	O-Ring	1
8	00-443694	Shaft - Film Roll (24 In.)	1
9	00-130445-00041	Core - Film (Adjustable)	1
10	00-441680-00001	Cap (1/4)	4
11	NS-029-01	Wing Nut 1/4-20 (SST)	4
12	00-130445-00039	Pin - Core Adapter (Aluminum Core)	2
13	00-913089-00147	Core - Film (Fixed) (Incls Items 12 & 7)	2
14	SC-129-32	Mach. Screw 1/4-20 x2 1/2 Slotted Rd. Hd. (SST)	4
15	00-913089-00147	Core - Film (Fixed) (Incls Items 12 & 7)	1
16	00-443694	Shaft - Film Roll (24 In.)	1
17	SC-129-32	Mach. Screw 1/4-20 x2 1/2 Slotted Rd. Hd. (SST)	4
18	00-130445-00041	Core - Film (Adjustable)	1
19	00-443695	Kit - Bearing Block (Set of 4) (1 Kit Per Axle) (Incls. Items 20 & 17)	2
20	NS-029-01	Wing Nut 1/4-20 (SST)	4
21	00-441680-00001	Cap (1/4)	4

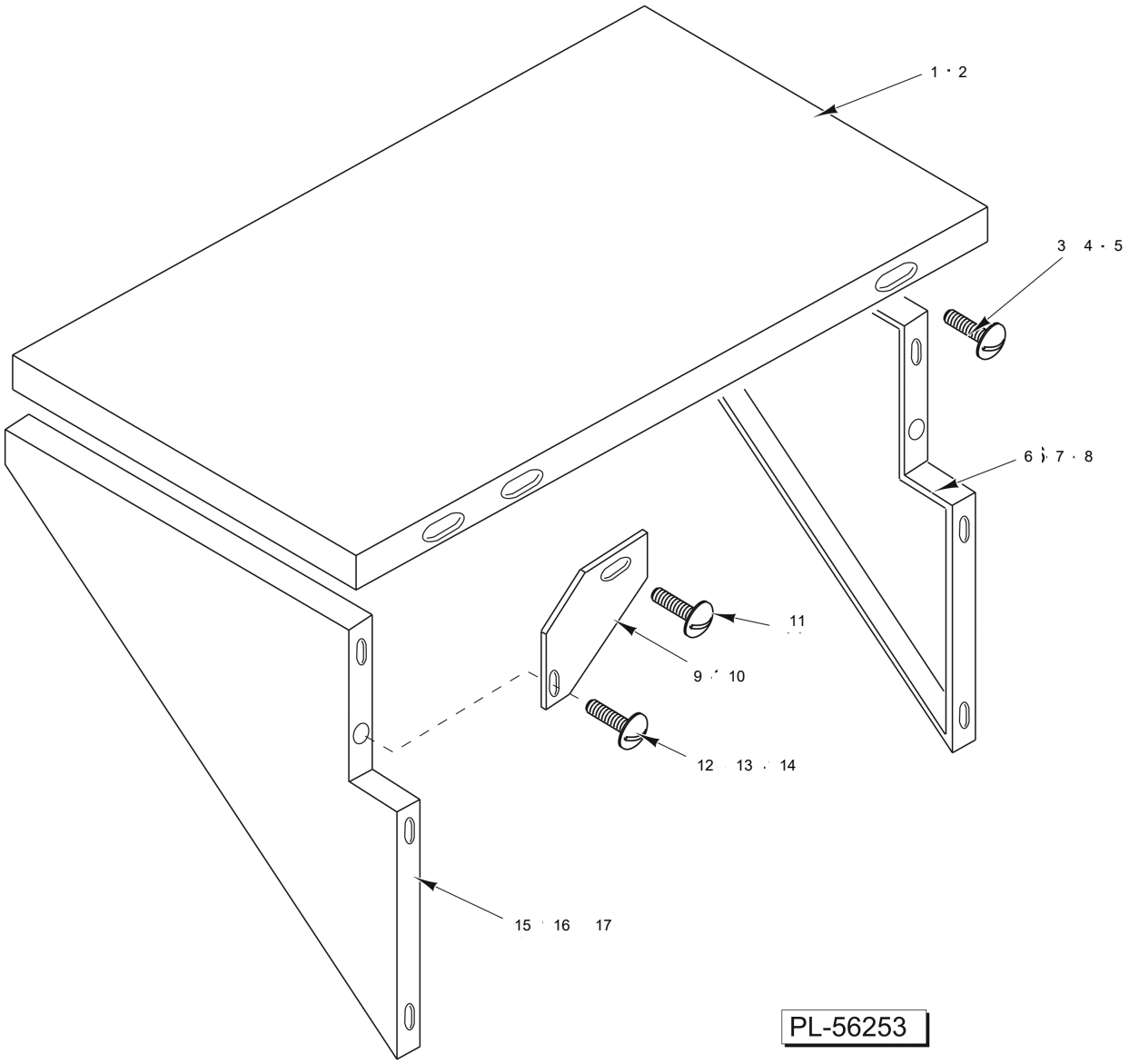

SIDE SHELF
(WITHOUT PRINTER SUPPORT)

SIDE SHELF
(WITHOUT PRINTER SUPPORT)

ILLUS. PL-56253	PART NO.	NAME OF PART	AMT.
1	00-333244	Shelf - Side	1
2	00-046603	Shelf Assy. - Welded (Incls. RH & LH Brackets)	1
3	SC-010-16	Mach. Screw 10-24 x 1/2 Slotted Truss Hd.	4
4	WL-008-13	Lockwasher #10 Internal Shakeproof	4
5	NS-009-22	Nut 10-24 Hex	4
6	00-334099	Bracket - Shelf (RH) (HWS3 & HWS4 ML-44049)	1
7	00-333670	Bracket - Shelf (RH) (HWS2)	1
8	00-333250	NLA - Obsolete--Bracket - Shelf (RH) (HWS1)	1
9	00-334101	Gusset - Support (HWS3 & HWS4 ML-44049)	2
10	00-333246	Gusset - Support (HWS1)	1
11	SC-010-16	Mach. Screw 10-24 x 1/2 Slotted Truss Hd.	2
12	SC-010-16	Mach. Screw 10-24 x 1/2 Slotted Truss Hd.	2
13	WL-008-13	Lockwasher #10 Internal Shakeproof	2
14	NS-009-22	Mach. Nut 8-32 Hex	2
15	00-334087	Bracket - Shelf (RH) (HWS3 & HWS4 ML-44049)	1
16	00-333669	Bracket - Shelf (LH) (HWS2)	1
17	00-333243	Bracket - Shelf (LH) (HWS1)	1

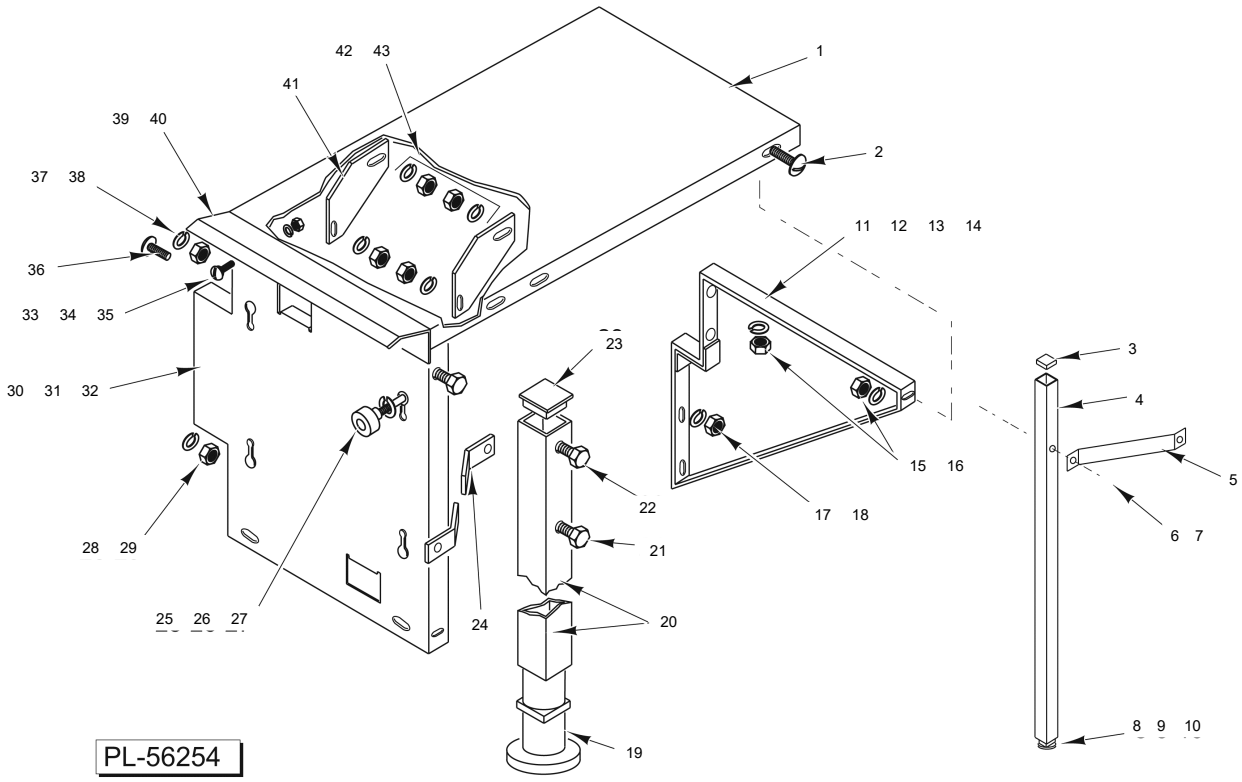

SIDE SHELF & PRINTER SUPPORT

SIDE SHELF & PRINTER SUPPORT

ILLUS. PL-56254	PART NO.	NAME OF PART	AMT.
1	00-333244	Shelf - Side	1
2	SC-010-16	Mach. Screw 10-24 x 1/2 Slotted Truss Hd.	4
3	00-333697	Cap - Plug	1
4	00-333684	Leg - Shelf Support (1 In.) (HWS2)	1
5	00-333690	Support - Leg Brace (HWS2)	1
6	WL-003-39	Lockwasher 1/4 Light	2
7	NS-013-02	Nut 1/4-20 Hex	2
8	00-333149	Insert - Leveler (HWS2)	1
9	NS-017-16	Nut - Jam 3/8-16 Hex Hd.	1
10	00-333148	NLA - Obsolete--Adjustable Foot (1 In. Leg) (HWS1 & HWS2)	1
11	00-334087	Bracket - Shelf (LH) (HWS3)	1
12	00-333250	NLA - Obsolete--Bracket - Shelf (RH) (HWS1)	1
13	00-333669	Bracket - Shelf (LH) (HWS2)	1
14	00-334087	Bracket - Shelf (LH) (HWS4 ML-44049)	1
15	NS-009-22	Nut 10-24 Hex	4
16	WL-008-13	Lockwasher #10 Internal Shakeproof	4
17	WL-003-39	Lockwasher 1/4 Light	2
18	NS-013-02	Nut 1/4-20 Hex	2
19	00-334100	Foot - Adjustable (HWS3 & HWS4 ML-44049)	1
20	00-334086	NLA - Obsolete--Leg - Shelf Support (HWS3 & HWS4, ML-44049)	1
21	SC-062-57	Cap Screw 1/4-20 x 2 Hex Hd. (HWS3 & HWS4 ML-44049)	2
22	SC-037-84	Cap Screw 1/4-20 x 11/2 Hex Hd. (HWS2)	2
23	00-334088	NLA - Obsolete--Cap Plug 1 1/2 In.	1
24	00-334746	Support - Leg Brace (HWS3 & HWS4 ML-44049)	1
25	SC-040-91	Cap Screw 8-32 x 7/8 Hex Socket Hd.	2
26	WL-008-07	Lockwasher #8 Internal Shakeproof	2
27	00-332956	NLA - Obsolete--Stud - Printer Mounting	2
28	NS-013-02	Nut 1/4-20 Hex	2
29	WL-003-39	Lockwasher 1/4 Light	2
30	00-333955	NLA - Obsolete--Panel - Printer Support (HWS3 & HWS4, ML-44049)	1
31	00-333245	NLA - Obsolete--Panel - Printer Support (HWS1)	1
32	00-333683	Panel - Printer Support (HWS2)	1
33	SC-010-16	Mach. Screw 10-24 x 1/2 Slotted Truss Hd.	2
34	WL-008-13	Lockwasher #10 Internal Shakeproof	2
35	NS-009-22	Nut 10-24 Hex	2
36	SC-010-16	Mach. Screw 10-24 x 1/2 Slotted Truss Hd.	2
37	NS-013-02	Nut 1/4-20 Hex	2
38	WL-003-39	Lockwasher 1/4 Light	2
39	00-333960	Shield - Printer (HWS3 & HWS4 ML-44049)	1
40	00-333391	NLA - Obsolete--Shield - Printer (HWS1 & HWS2)	1
41	00-334101	Gusset - Support (HWS3 & HWS4 ML-44049)	2
42	WL-008-13	Lockwasher #10 Internal Shakeproof	4
43	NS-009-22	Nut 10-24 Hex	4

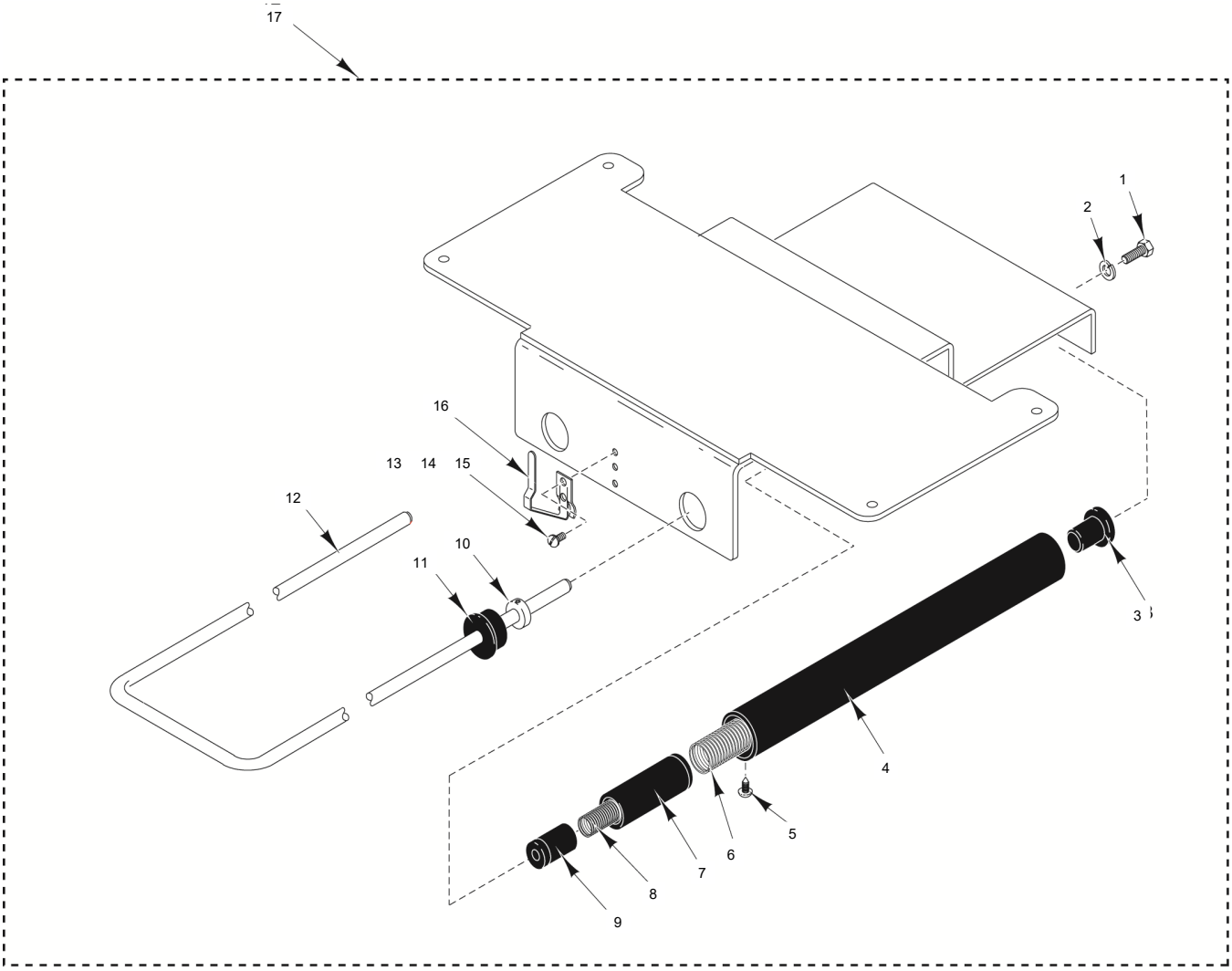

PL-56255

PACKAGE REST KIT
(HWS4 ML-44113 & HWS4C ML-44225)

PACKAGE REST KIT
(HWS4 ML-44113 & HWS4C ML-44225)

ILLUS. PL-56255	PART NO.	NAME OF PART	AMT.
1	SC-041-05	Cap Screw 1/4-20 x 5/8 Hex Hd	2
2	WL-006-17	Lockwasher 1/4	2
3	00-442049	Plug - Tube Guide	2
4	00-442050	Housing - Spring	2
5	SD-036-01	Self-Tapping Screw 6-20 x 1/4 Phil. Pan Hd., Type AB (Zinc Plated)	4
6	00-442052	Spring - Compression Large	2
7	00-442047	Spring - Guide Assy.	2
8	00-442051	Spring - Compression Small	2
9	00-442046	Guide - Tube	2
10	00-442048	Collar - Shaft (Zinc Plated)	2
11	00-442053	Plug - Tube Guide	2
12	00-442043	Rod - Package Rest	1
13	SC-093-03	Mach. Screw 8-32 x 3/8 Pan Hd	2
14	WL-006-02	Lockwasher #8	2
15	NS-044-07	Nut 8-32 KEPS	2
16	00-442353	Fastener - Quick-Release	1
17	00-441566	Package Rest Assembly (Incls. Items 1 thru 16)	1

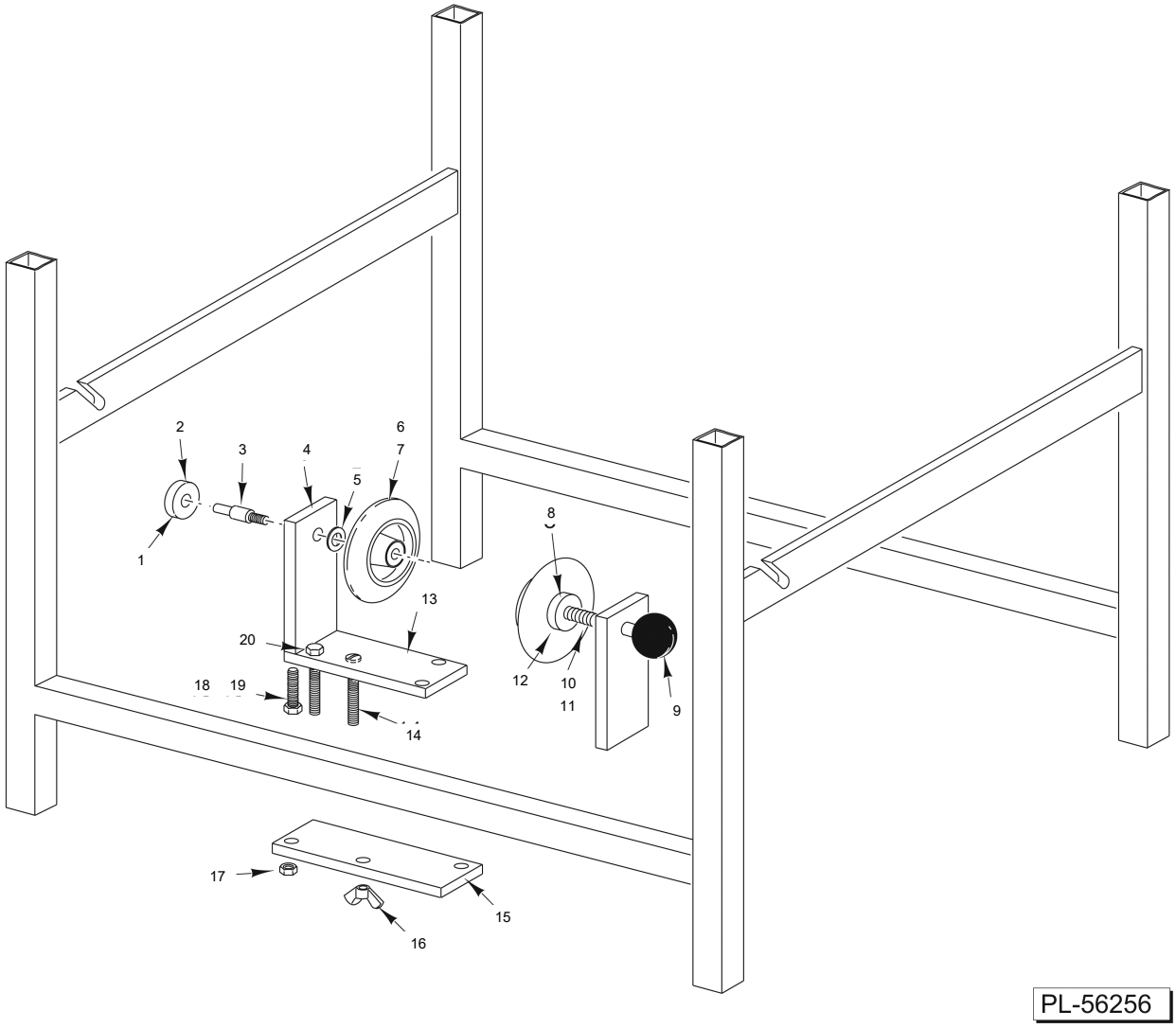

OVERLAY DISPENSER UNIT

OVERLAY DISPENSER UNIT

ILLUS. PL-56256	PART NO.	NAME OF PART	AMT.
1	00-086710	Collar Assy. (Incls. Item 2)	1
2	SC-075-10	Set Screw 1/4-20 x 3/16 Hex Hdls., Cup Pt.	1
3	00-333079	Shaft	1
4	00-333081	Bearing Assy.	2
5	WS-018-30	Washer (SST)	2
6	NS-017-08	Jam Nut 5/16-18 Hex	2
7	00-333082	Spool	2
8	SC-075-10	Set Screw 1/4-20 x 3/16 Hex Hdls., Cup Pt.	1
9	00-060468	Knob - Gear Shift	1
10	00-333083	Spring	1
11	00-333080	Shaft	1
12	00-086710	Collar Assy. (Incls. Item 8)	1
13	00-333085	Plate - Clamp	1
14	SC-081-68	Mach. Screw 1/4-20 x 2 Slotted Rd. Hd.	1
15	00-333088	Plate - Clamp	1
16	NS-028-11	Wing Nut 1/4-20	1
17	NS-037-10	Lock Nut 1/4-20 Special	2
18	WL-003-38	Lockwasher 1/4 Helical	4
19	SC-118-19	Cap Screw 1/4-20 x 3/4 Hex Hd.	4
20	SC-124-56	Cap Screw 1/4-20 x 2 Hex Hd.	2
	00-333078	Overlay Film Assy. (Incls. Items 1 thru 20)	1

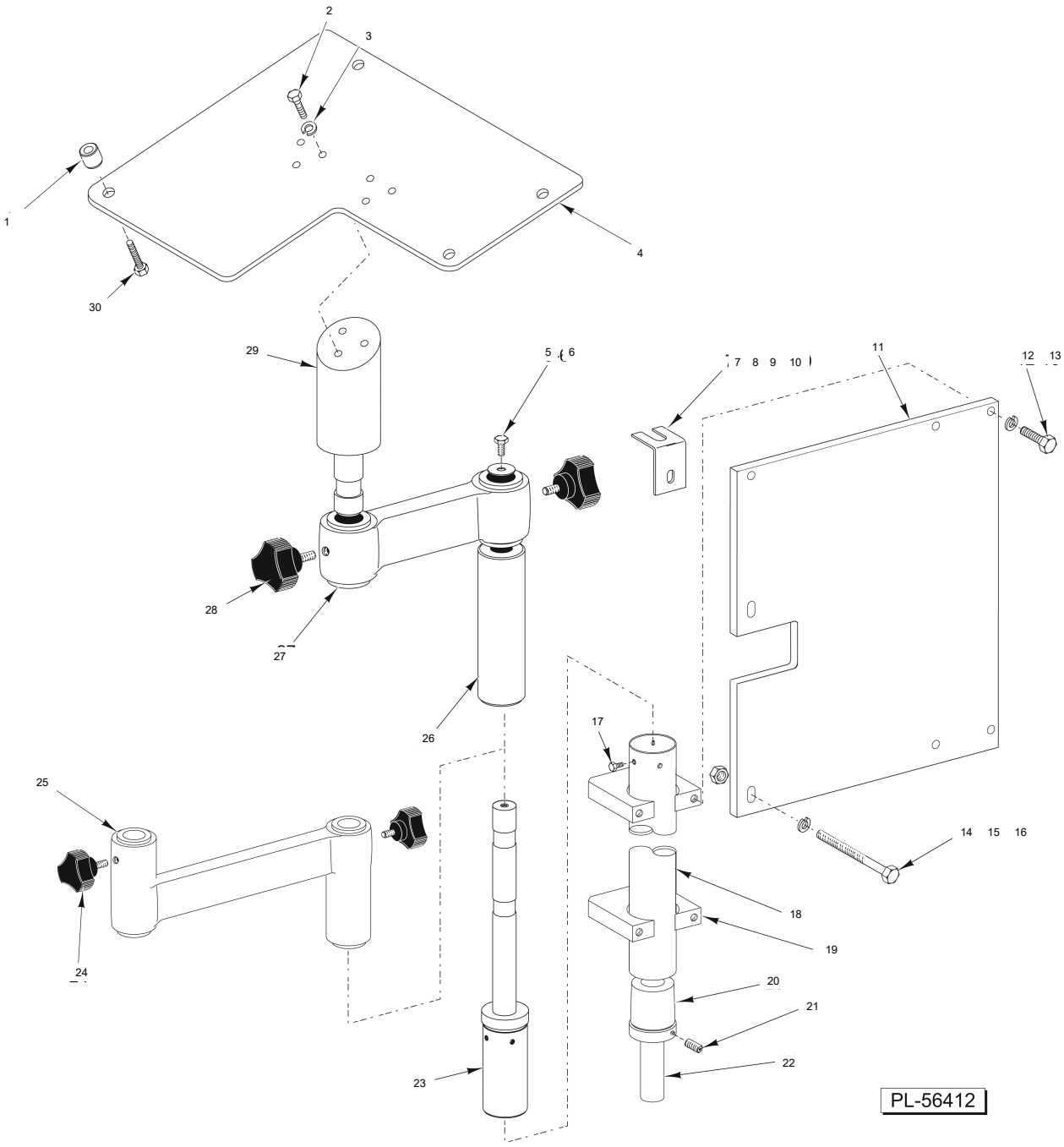

ULTIMA MOUNTING KIT

ULTIMA MOUNTING KIT

ILLUS. PL-56412	PART NO.	NAME OF PART	AMT.
1	00-333750	Spacer Label Head	4
2	SC-068-33	Mach. Screw 10-32 x 1/2 Hex	3
3	WL-008-13	Lockwasher #10 Internal Shakeproof	3
4	00-042571	Plate - Printer Mount	1
5	WS-003-45	Washer	1
6	SC-100-08	Mach. Screw 1/4-20 x 3/8 Hex Washer Hd., Whiz-Lock	1
7	00-183648	Clamp	2
8	SC-008-10	Mach. Screw 10-32 x 1/2 Slotted Rd. Hd.	2
9	NS-009-22	Nut 10-24 Hex	2
10	WL-008-13	Lockwasher #10 Internal Shakeproof	2
11	00-043651	Plate - Post Mounting	1
12	SC-118-19	Cap Screw 1/4-20 x 3/4 Hex Hd.	4
13	WL-003-38	Lockwasher 1/4 Helical	4
14	SC-118-57	Cap Screw 1/4-20 x 21/2 Hex Hd.	2
15	WL-003-38	Lockwasher 1/4 Helical	2
16	NS-013-02	Nut 1/4-20 Hex	2
17	SC-116-95	Mach. Screw 8-32 x 3/8 Hex Hd.	3
18	00-043433	Column Display	1
19	00-254866	Block - Column	2
20	00-043652	Bushing - Leg	1
21	SC-047-72	Set Screw 1/4-20 x 3/8 Hex Hdls., Cup Pt.	2
22	00-043653	Leg	1
23	00-043449	Post Assy. Support	1
24	00-183538	Knob - Film Centering	2
25	00-043420	Arm Assy. - Printer Pivot (U2000P3)	1
26	00-043757	Spacer - Pivot Arm	1
27	00-043421	Arm Assy. - Printer Pivot (U2000S1/U2000P1)	1
28	00-183538	Knob - Film Centering	2
29	00-042570	Pivot Assy. - Printer	1
30	SC-121-62	Mach. Screw 1/4-20 x 1 Hex Washer Hd., Whiz-Lock	4
	00-184751	Kit - U2000S1/U2000P1 Post Kit (Incls. Items 1 thru 23 & 26 thru 30)	
	00-043425	Kit - U2000P3 (Incls. Items 1 thru 4, 24, 25, 29, & 30)	

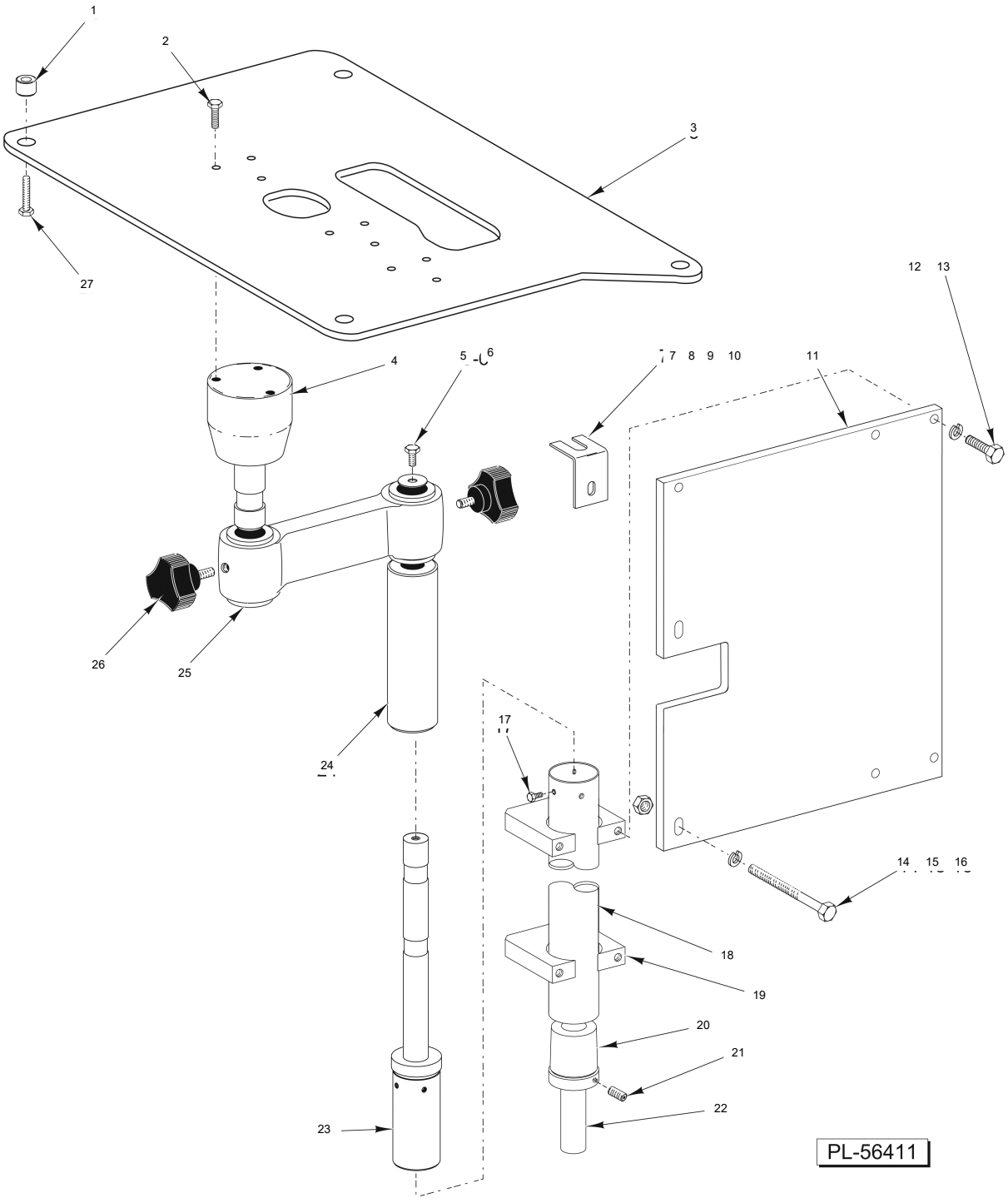

QUANTUM/HLX MOUNTING KIT

QUANTUM/HLX MOUNTING KIT

ILLUS. PL-56411	PART NO.	NAME OF PART	AMT.
1	00-445471	Spacer - Printer Mounting	4
2	SC-121-61	Mach. Screw 1/4-20 x 5/8 Hex Washer Hd., Whiz-Lock	3
3	00-044821	Plate - Printer Mount	1
4	00-044829	Pivot Assy. - Printer	1
5	WS-003-45	Washer	1
6	SC-100-08	Mach. Screw Special 1/4-20 x 3/8 Hex Washer Hd., Whiz-Lock	1
7	SC-008-10	Mach. Screw 10-24 x 1/2 Slotted Rd. Hd	2
8	WL-008-13	Lockwasher #10 Internal Shakeproof	2
9	NS-009-22	Nut 10-24 Hex	2
10	00-183648	Clamp	2
11	00-043651	Plate - Post Mounting	1
12	SC-118-19	Cap Screw 1/4-20 x 3/4 Hex Hd.	4
13	WL-003-38	Lockwasher 1/4 Helical	4
14	SC-118-57	Cap Screw 1/4-20 x 21/2 Hex Hd	2
15	WL-003-38	Lockwasher 1/4 Helical	2
16	NS-013-02	Nut 1/4-20 Hex	2
17	SC-116-95	Mach. Screw 8-32 x 3/8 Hex Hd	3
18	00-043433	Column - Display	1
19	00-254866	Block - Column	2
20	00-043652	Bushing - Leg	1
21	SC-047-72	Set Screw 1/4-20 x 3/8 Hex Hdls., Cup Pt.	2
22	00-043653	Leg	1
23	00-043449	Post Assy. Support	1
24	00-043757	Spacer - Pivot Arm	1
25	00-440631	Arm Assy. - Printer Pivot	1
26	00-183538	Knob - Film Centering	2
27	SC-121-62	Mach. Screw 1/4-20 x 1 Hex Washer Hd., Whiz-Lock	4
	00-044832	Kit - Quantum Post Assy. (Incls. Items 1 thru 27)	

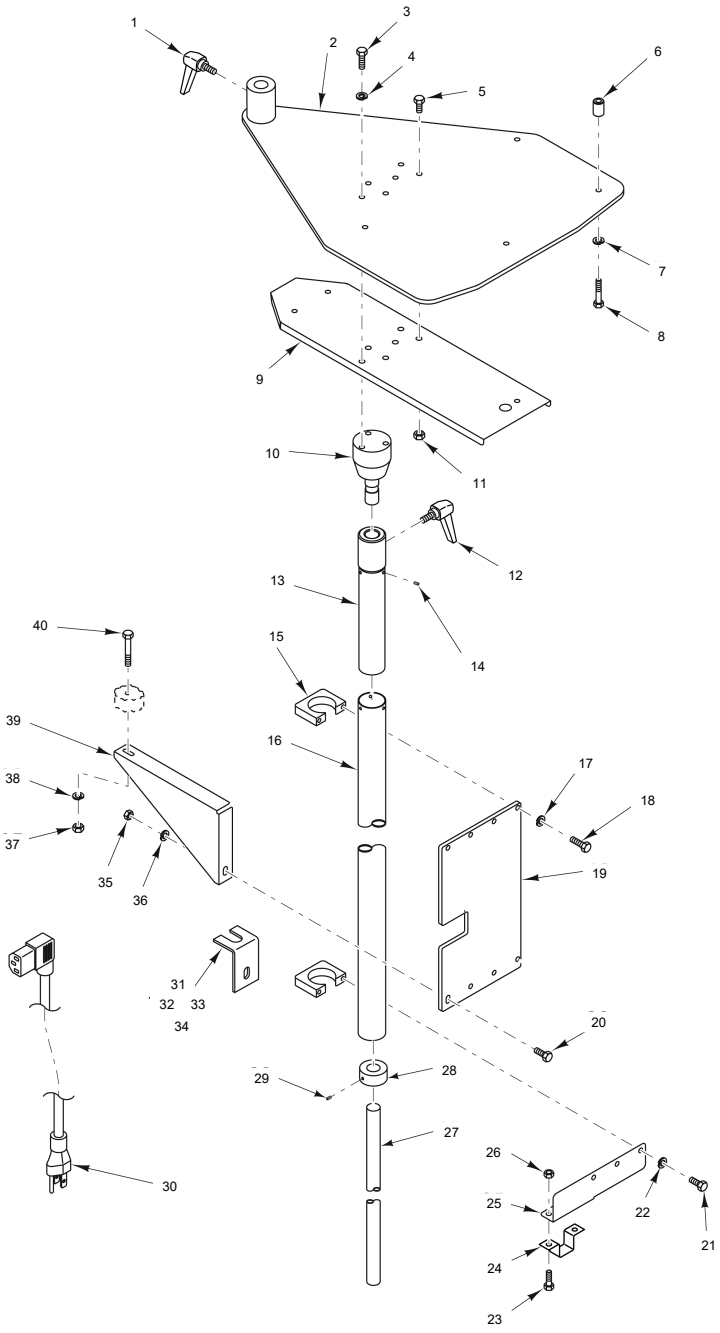

PL-59622

ACCESS MOUNTING KIT

ACCESS MOUNTING KIT

ILLUS. PL-59622	PART NO.	NAME OF PART	AMT.
1	00-442734	Knob - Console Mount	1
2	00-443478	Plate Assy. - Printer Mount	1
3	SC-118-19	Cap Screw 1/4-20 x 3/4 Hex Hd.	3
4	WL-003-38	Lockwasher 1/4 Helical	1
5	SC-123-92	Mach. Screw 1/4-20 x 5/8 Hex Washer Hd.	5
6	00-443459	Spacer - Printer Mount	4
7	WL-003-38	Lockwasher 1/4 Helical	4
8	SC-041-07	Cap Screw 1/4-20 x 1-1/2 Hex Hd. (SST)	4
9	00-443776	Bracket - Printer Mount Plate	1
10	00-044829	Stud Assy. - Printer Pivot	1
11	NS-038-04	Lock Nut 1/4-20 Hex	5
12	00-442734	Knob - Console Mount	1
13	00-443764	Post - Support	1
14	SC-116-95	Mach. Screw 8-32 x 3/8 Slotted Hex Hd	1
15	00-254866	Block - Column	3
16	00-043433	Column - Display	1
17	WL-003-38	Lockwasher 1/4 Helical	2
18	SC-118-19	Cap Screw 1/4-20 x 3/4 Hex Hd.	2
19	00-443768	Plate - Post Mounting	1
20	SC-118-57	Cap Screw 1/4-20 x 21/2 Hex Hd	2
21	SC-118-20	Cap Screw 1/4-20 x 1/2 Hex Hd.	2
22	WL-003-38	Lockwasher 1/4 Helical	2
23	SC-123-92	Mach. Screw 1/4-20 x 5/8 Hex Washer Hd.	1
24	00-443762	Bracket - Column Display	1
25	00-443763	Bracket - Column Display Mount	1
26	NS-038-04	Lock Nut 1/4-20 Hex	5
27	00-043653	Leg	1
28	00-043652	Bushing - Leg	1
29	SC-047-72	Set Screw 1/4-20 x 3/8 Hex Hdls., Cup Pt.	2
30	00-257200	Cord - Power	1
31	00-183648	Clamp	2
32	SC-008-10	Mach. Screw 10-24 x 1/2 Slotted Rd. Hd	2
33	WL-008-13	Lockwasher #10 Internal	2
34	NS-009-22	Nut 10-24 Hex	2
35	NS-013-02	Nut 1/4-20 Hex	2
36	WL-003-38	Lockwasher 1/4 Helical	2
37	NS-009-22	Nut 10-24 Hex	2
38	WL-004-40	Lockwasher #10 Helical	2
39	00-443775	Brace - Frame	1
40	SC-111-29	NLA - Obsolete--Mach. Screw 10-24 x 1-1/2 Phil. Pan Hd	2
	00-441937-00004	Cable - USB (3 Ft.)	1
	00-441419-00003	Cord - AC (Printer to Console) (3 Ft.)	1

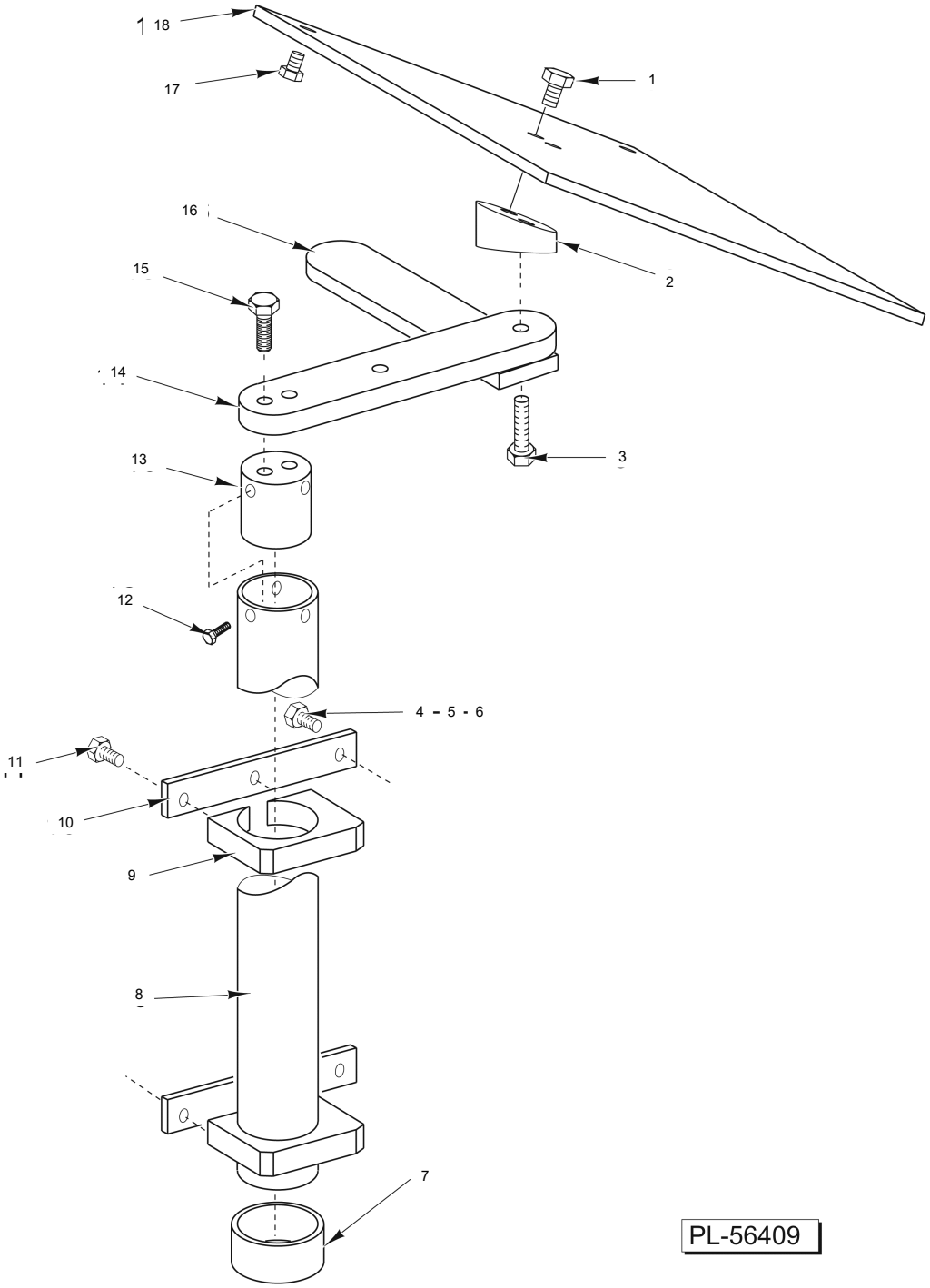

18VP/18VPS POST ASSEMBLY

18VP/18VPS POST ASSEMBLY

ILLUS. PL-56409	PART NO.	NAME OF PART	AMT.
1	SC-068-19	Mach. Screw 10-32 x 1/2 Slotted Hex Hd.	2
2	00-259050	NLA - Obsolete--Pivot	1
3	SC-117-91	Cap Screw 1/4-20 x 1 Hex Hd.	1
4	SC-118-57	Cap Screw 1/4-20 x 21/2 Hex Hd.	2
5	WL-003-39	Lockwasher 1/4 Light	2
6	NS-013-02	Nut 1/4-20 Hex	2
7	00-183663	Protector - Cord	1
8	00-258194	Post - Display	1
9	00-254866	Block - Post	2
10	00-258506	Bar - Post Mount	2
11	SC-118-19	Cap Screw 1/4-20 x 3/4 Hex Hd.	4
12	SC-116-95	Mach. Screw 8-32 x 3/8 Hex Hd.	3
13	00-258146	Post - Support	1
14	00-183687	Arm - Support	1
15	SC-117-91	Cap Screw 1/4-20 x 1 Hex Hd.	2
16	00-258510	Guide Liner	1
17	SC-116-18	Cap Screw 8-32 x 1 Hex Hd.	2
18	00-258507	NLA - Obsolete--Plate	1
	00-258505	Kit - 18VP/18VPS Post Assy. (Incls. Items 1 thru 18)	

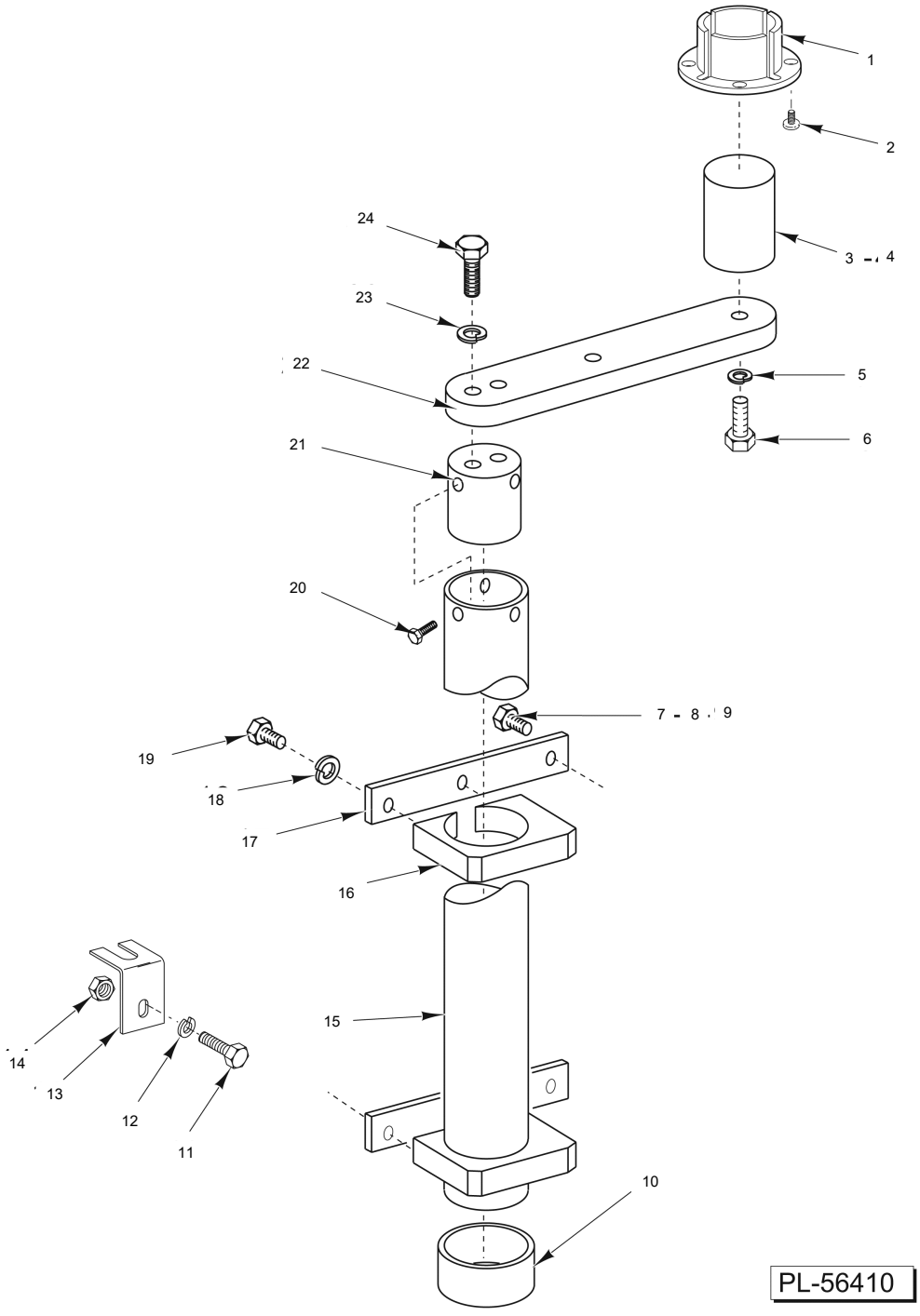

SP PRINTER MOUNT

SP PRINTER MOUNT

ILLUS. PL-56410	PART NO.	NAME OF PART	AMT.
1	00-259726	Ring - Clamp	1
2	SC-037-82	Cap Screw 1/4-20 x 7/8 Hex Hd.	3
3	00-183645	Pivot	1
4	RP-005-02	Roll Pin (0.125 x 0.500)	1
5	WL-003-39	Lockwasher 1/4 Light	1
6	SC-117-91	Cap Screw 1/4-20 x 1 Hex Hd.	1
7	WL-003-39	Lockwasher 1/4 Light	2
8	SC-118-57	Cap Screw 1/4-20 x 21/2 Hex Hd.	2
9	NS-013-02	Nut 1/4-20 Hex	2
10	00-183663	NLA - Obsolete--Protector - Cord.	1
11	SC-008-10	Mach. Screw 10-24 x 1/2 Slotted Rd. Hd.	2
12	WL-008-13	Lockwasher #10 Internal Shakeproof	2
13	00-183648	Clamp	2
14	NS-009-22	Nut 10-24 Hex	2
15	00-258194	Post - Display	1
16	00-254866	Block - Post	2
17	00-258506	Bar - Post Mount	2
18	WL-003-39	Lockwasher 1/4 Light	4
19	SC-118-19	Cap Screw 1/4-20 x 3/4 Hex Hd.	4
20	SC-116-95	Mach. Screw 8-32 x 3/8 Hex Hd.	3
21	00-258146	Post - Support	1
22	00-183687	Arm - Support	1
23	WL-003-39	Lockwasher 1/4 Light	2
24	SC-117-91	Cap Screw 1/4-20 x 1 Hex Hd.	2
	00-183689	NLA - Obsolete--Kit - SP1500P Post Assy. (Incls. Items 3 thru 24)	1

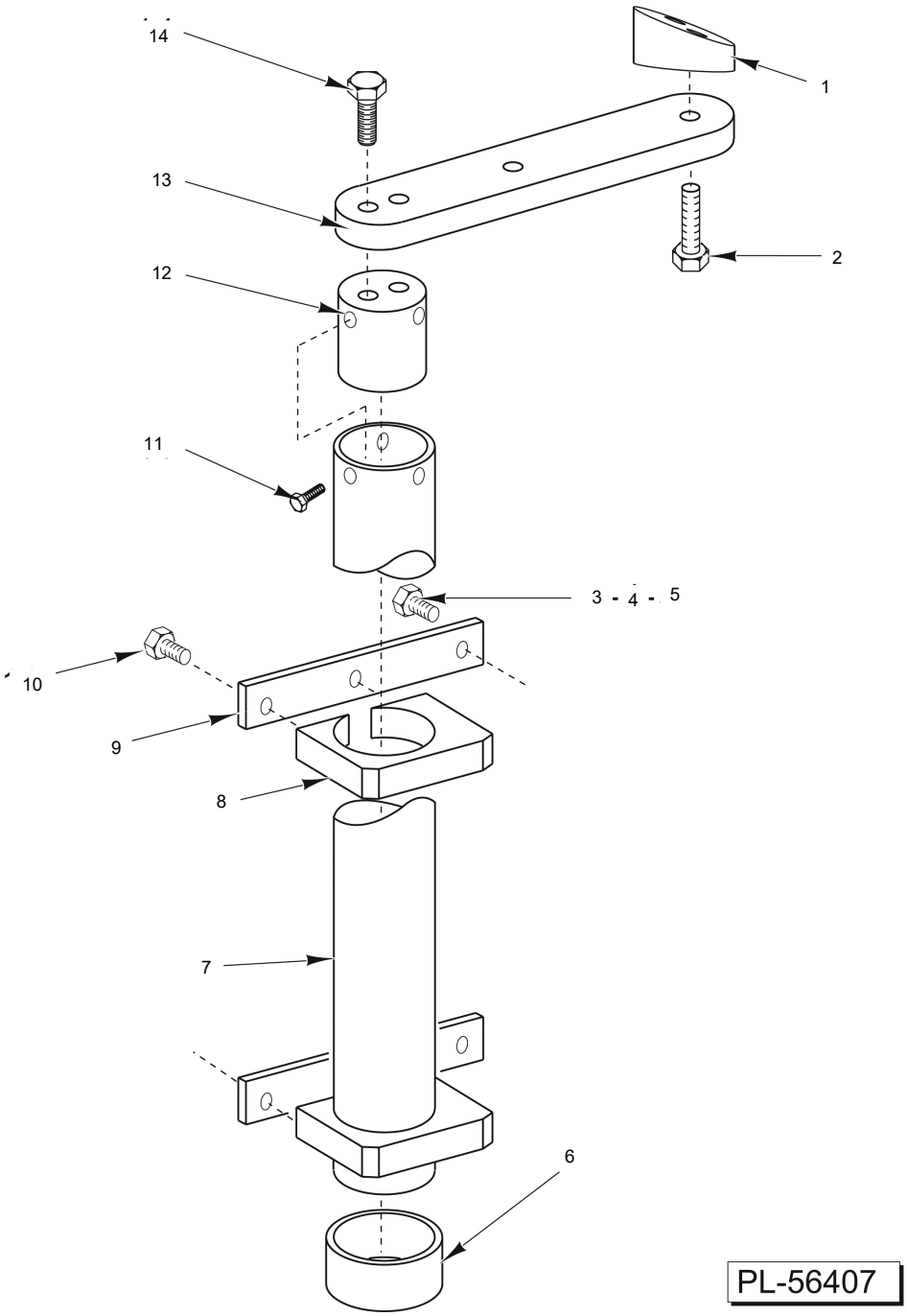

LIBRARY SUPPORT - POST ASSEMBLY

LIBRARY SUPPORT - POST ASSEMBLY

ILLUS. PL-56407	PART NO.	NAME OF PART	AMT.
1	00-258026	Pivot	1
2	SC-117-91	Cap Screw 1/4-20 x 1 Hex Hd.	1
3	SC-118-57	Cap Screw 1/4-20 x 21/2 Hex Hd	2
4	WL-003-39	Lockwasher 1/4 Light	2
5	NS-013-02	Nut 1/4-20 Hex	2
6	00-183663	Protector - Cord	1
7	00-258194	Post - Display	1
8	00-254866	Block - Post	2
9	00-258506	Bar - Post Mount	2
10	SC-118-19	Cap Screw 1/4-20 x 3/4 Hex Hd.	4
11	SC-116-95	Mach. Screw 8-32 x 3/8 Hex Hd	3
12	00-258146	Post - Support	1
13	00-183687	Arm - Support	1
14	SC-117-91	Cap Screw 1/4-20 x 1 Hex Hd.	2
	00-258511	Look-Up Post Assy. (Incls. Items 1 thru 14)	1

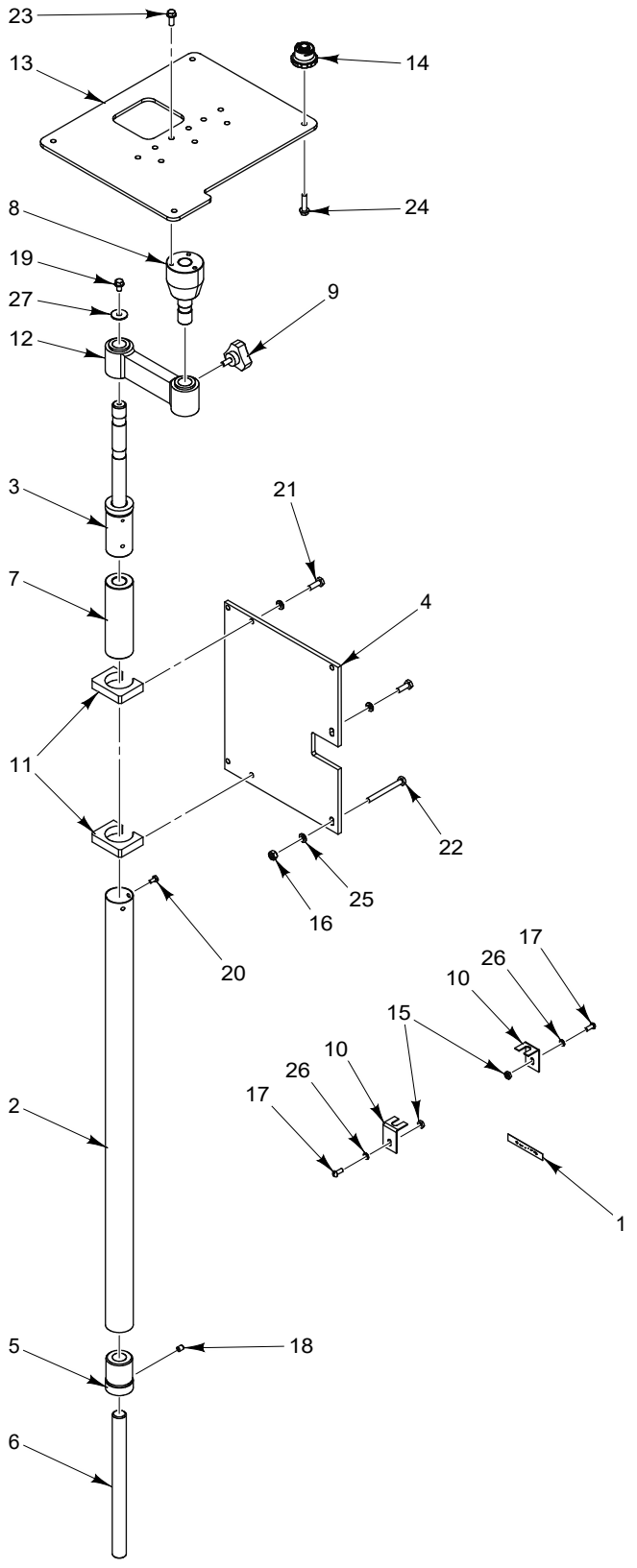

PL-62590

GT/GTX SCALE MOUNTING KIT

GT/GTX SCALE MOUNTING KIT

ILLUS. PL-62590	PART NO.	NAME OF PART	AMT.
1	00-042880	Label - Prepack	1
2	00-043433	Column Display	1
3	00-043449	Post Assy. Support	1
4	00-043651	Plate - Post Mounting	1
5	00-043652	Bushing - Leg	1
6	00-043653	Leg	1
7	00-043757	Spacer - Pivot Arm	1
8	00-044829	Pivot Assy. - Printer	1
9	00-183538	Knob - Film Centering	2
10	00-183648	Clamp	2
11	00-254866	Block - Post	2
12	00-440631	Arm - Printer Pivot	1
13	45-001125	Plate - Scale Mount	1
14	45-001126	Foot - Scale Mount	4
15	NS-009-22	Nut 10-24 Hex	2
16	NS-013-02	Nut 1/4-20 Hex	2
17	SC-008-10	Mach. Screw 10-24 x 1/2 Slotted Rd. Hd.	2
18	SC-047-72	Set Screw 1/4-20 x 3/8 Hex Hdls., Cup Pt.	2
19	SC-100-08	Mach. Screw 1/4-20 x 3/8 Hex Washer Hd.	1
20	SC-116-95	Mach. Screw 8-32 X 3/8 Hex Hd	3
21	SC-118-19	Cap Screw 1/4-20 x 3/4 Hex Hd.	4
22	SC-118-57	Cap Screw 1/4-20 x 2-1/2 Hex Hd.	2
23	SC-121-61	Mach. Screw 1/4-20 X 5/8 Hex Washer Hd. "Whiz-Lock"	3
24	SC-129-73	Mach. Screw 1/4-20 x 1 Hex Washer Hd. (SST)	4
25	WL-003-38	Lockwasher 1/4 Helical	6
26	WL-008-13	Lockwasher #10 Internal Shakeproof	2
27	WS-003-45	Washer	1

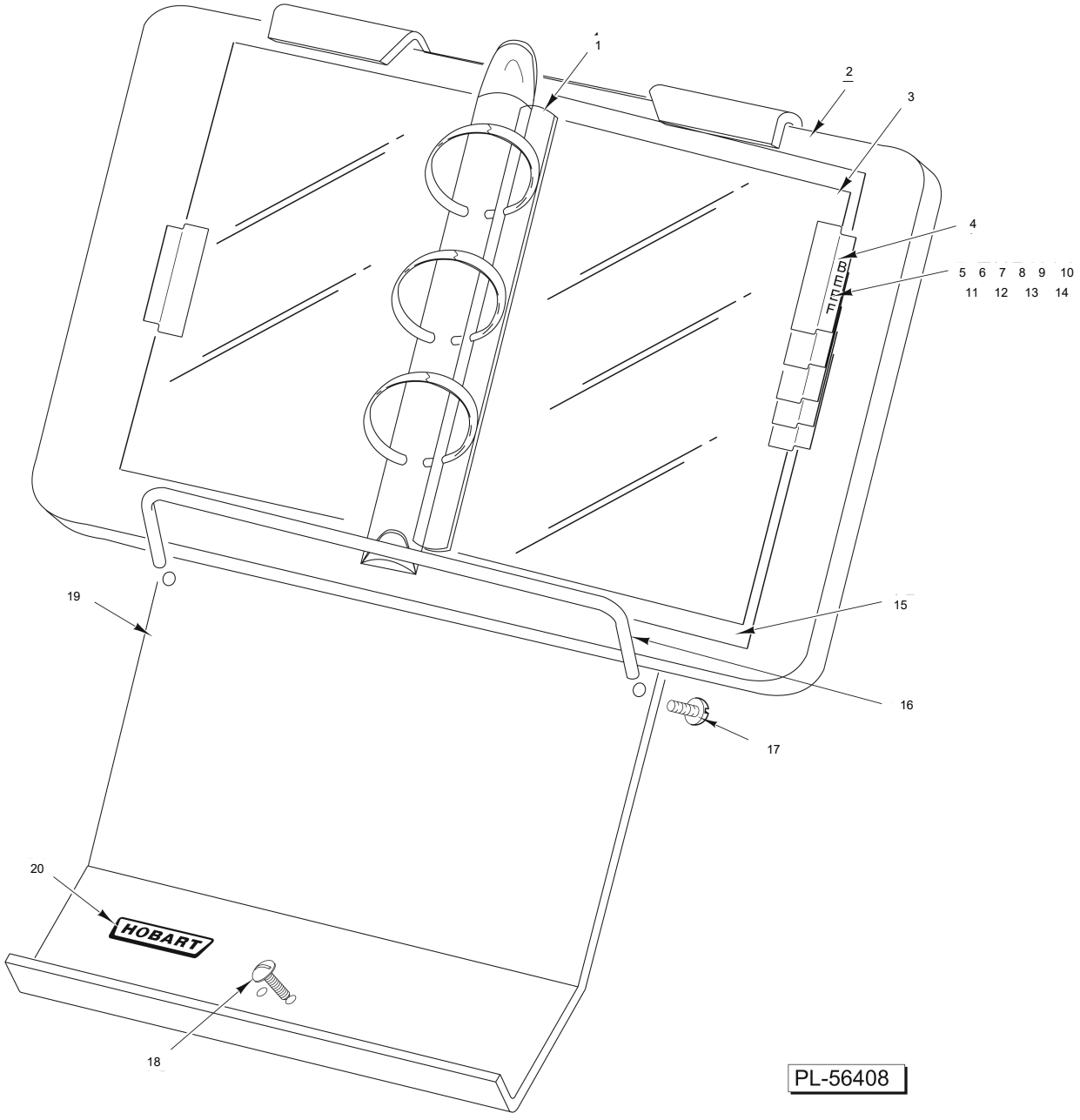

PLU LIBRARY

PLU LIBRARY

ILLUS. PL-56408	PART NO.	NAME OF PART	AMT.
1	00-183752	Strip - Reinforcement	17
2	00-516298	Binder - 3-Ring	1
3	00-258780	Insert - Stiffener	17
4	00-258739	Tab - Index	25
5	00-258738-00001	Identifier - Page (Veal)	2
6	00-258738-00002	Identifier - Page (Poultry)	2
7	00-258738-00003	Identifier - Page (Pork)	3
8	00-258738-00004	Identifier - Page (Misc.)	2
9	00-258738-00005	Identifier - Page (Operating Inst.)	1
10	00-258738-00006	Identifier - Page (Beef)	3
11	00-258738-00007	Identifier - Page (Lamb)	2
12	00-258738-00008	Identifier - Page (Seafood)	2
13	00-258738-00009	Identifier - Page (Cheese)	2
14	00-258738-00010	Identifier - Page (Produce)	2
15	00-183763	Protector Sheet (Incls. Item 1)	17
16	00-258762	Rod - Support	1
17	SC-112-42	Mach. Screw 6-32 x 1/2 Phil. Pan Hd.	2
18	SC-110-97	Mach. Screw 10-32 x 1/2 Truss Hd	3
19	00-183905	Plate - Library	1
20	00-076971	Logo - Hobart	1
	00-183912	PLU Library Assy. (Incls. Items 1 thru 20)	1

THERE IS NO
GRAPHIC
FOR THIS
PARTS LIST

MISCELLANEOUS

MISCELLANEOUS

ILLUS. PL-55654	PART NO.	NAME OF PART	AMT.
1	00-334289	Terminal - Spade 1/4 (Hi-Temp)	AR
2	00-086951	Terminal - Ring #8 (Hi-Temp)	AR
3	00-127691	Terminal - Ring #10 (Hi-Temp)	AR
4	00-444559-00001	Wire 16 Ga. (Hi-Temp)	AR