CATALOG OF REPLACEMENT PARTS



HTx SERIES SCALES

ML-29355	HTx-7WS
ML-29357	HTx-WS
ML-29358	HTxP-WS
ML-29356	HTx-7EWS

A product of HOBART 701 S. RIDGE AVENUE TROY, OHIO 45374-0001

FORM 43318 Rev. F (January 2019)

 © HOBART 2019

Table of Contents

5 OPERATOR CONSOLE
7 CUSTOMER DISPLAY (ML-29355)
9 WITHOUT CUSTOMER DISPLAY (ML-29356, ML-29357, & ML-29368)
11 WEIGHER COMPONENTS
13 MAIN CIRCUIT COMPONENTS
15 POWER SUPPLY
17 PRINTER
19 CASSETTE (WIDE LABEL)
21 CASSETTE (NARROW LABEL)
23 PRINTER ONLY (ML-29358)
25 ELEVATED DISPLAY (7 IN.)
27 CABLES
29 SCALE UNIT (USED WITH TWO-PIECE SCALE/PRINTER)

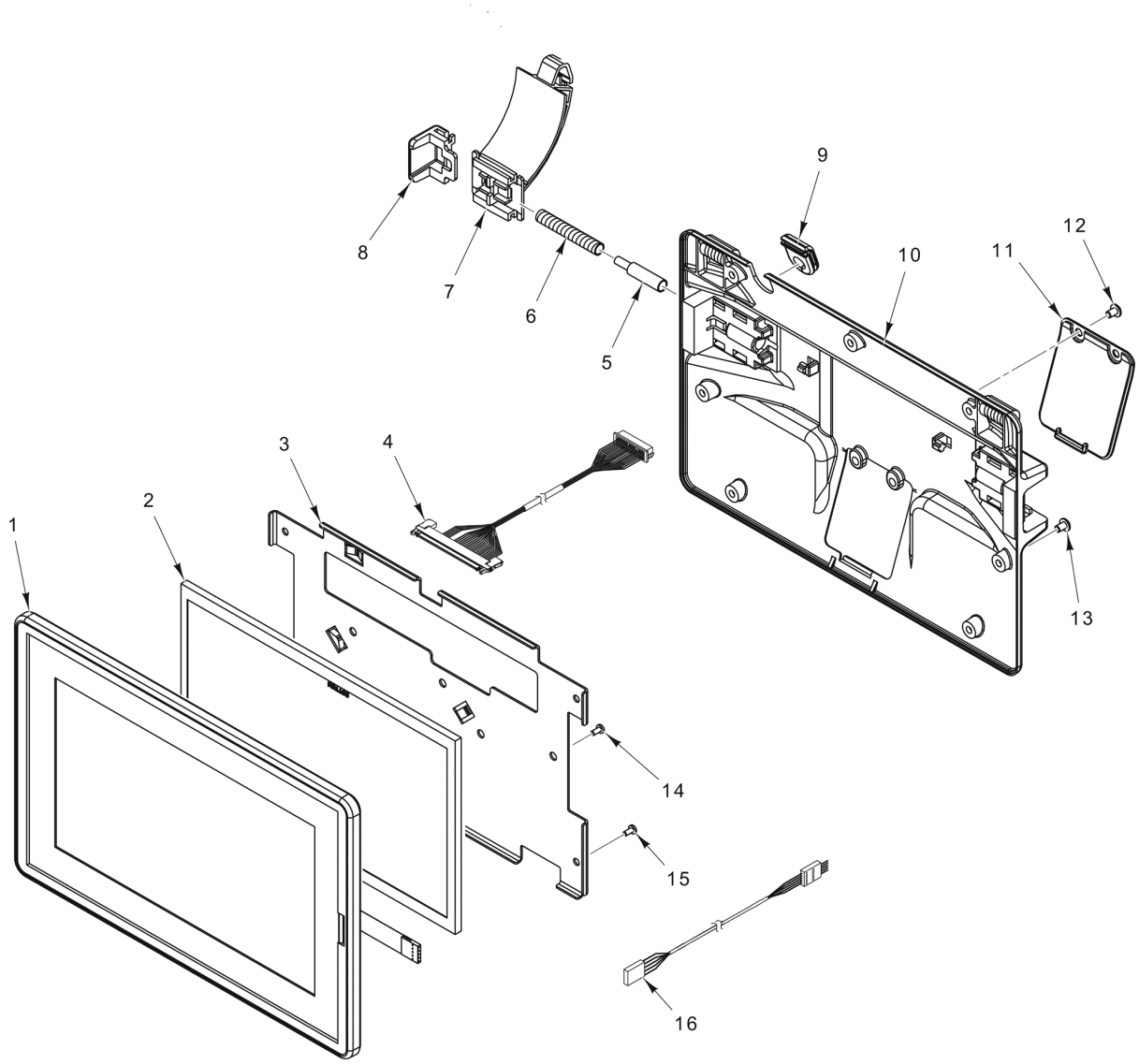

17	00-255502	Tie - Cable
18	00-913108	Stylus

PARTS NOT ILLUSTRATED

PL-60270

OPERATOR CONSOLE

OPERATOR CONSOLE

ILLUS. PL-60270	PART NO.	NAME OF PART	AMT.
1	00-447080	Touchscreen Housing Assembly	1
2	00-447157	Display (10.1 In.) (TFT) (WVGA LED)	1
3	00-447813	Bracket Assy. - Display Mounting	1
4	00-447095	Cable Assy. (Operator Display LVDS)	1
5	00-447084	Guide - Spring	1
6	00-043316	Spring - Latch Return	2
7	00-447039	Arm - Console Latch	2
8	00-447040	Button - Console Latch	2
9	00-447038	Grommet	1
10	00-447018	Housing - Console Rear (Black)	1
11	00-447076	Plate - Scanner Cover (Black)	1
12	SC-018-30	Mach. Screw 8-32 x 1/4 Phil. Pan Hd	2
13	SC-018-30	Mach. Screw 8-32 x 1/4 Phil. Pan Hd	7
14	SC-018-28	Mach. Screw 6-32 x 1/4 Phil. Pan Hd	2
15	SC-018-28	Mach. Screw 6-32 x 1/4 Phil. Pan Hd	4
16	00-447167	Cable Assy. (Touchscreen)	1
17	00-255502	Tie - Cable Locking	AR
18	00-913108	Stylus (With Hobart Service Logo)	1

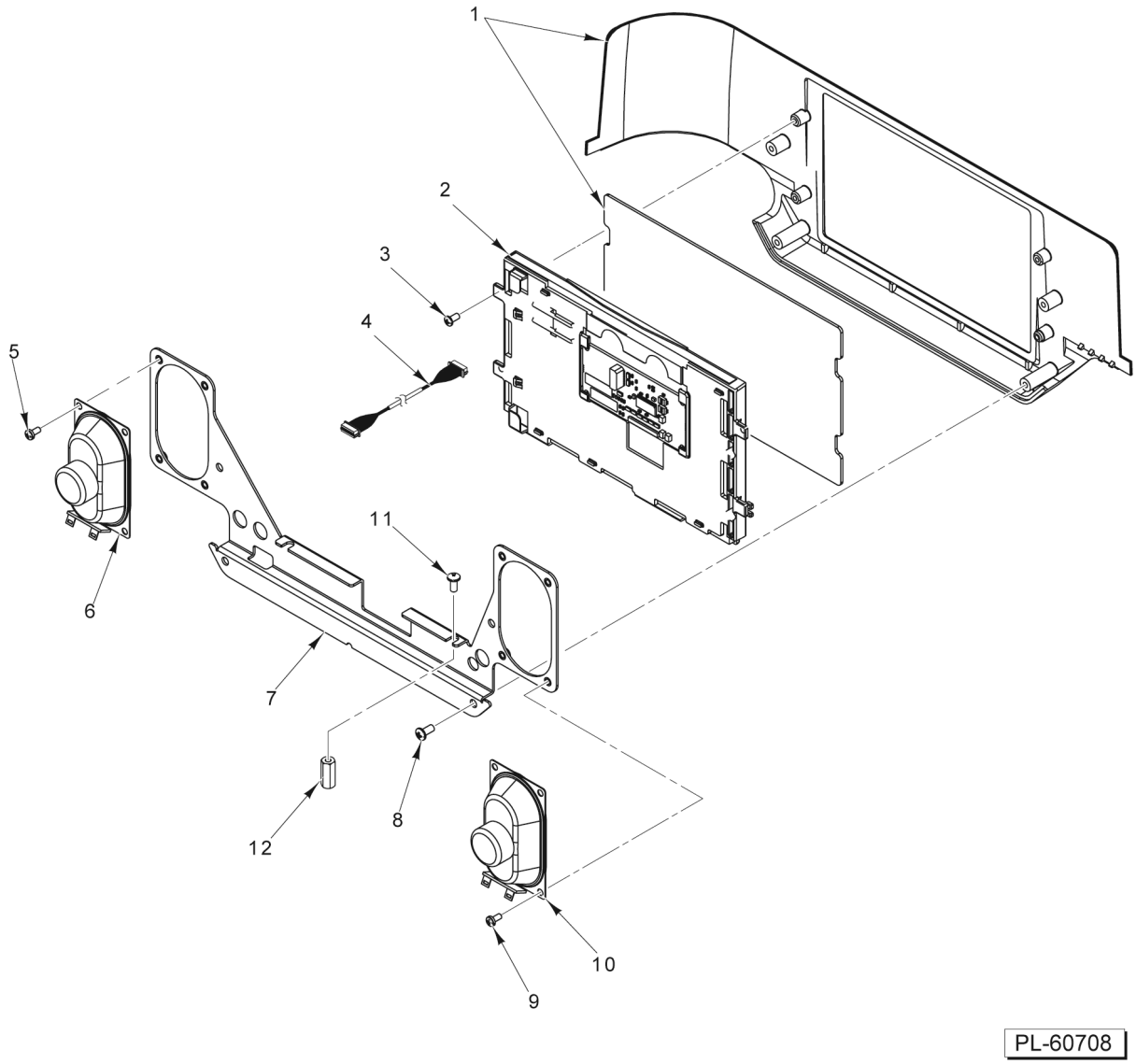

CUSTOMER DISPLAY (ML-29355)

CUSTOMER DISPLAY (ML-29355)

ILLUS. PL-60708	PART NO.	NAME OF PART	AMT.
1	00-449178	Housing Assy, Customer Display	1
2	00-447081	Display Assy. (7 In.)	1
3	SD-033-14	Self-Tapping Screw 4-40 x 1/4 Phil. Pan Hd	4
4	00-447032	Cable Assy. (Customer Display) (LVDS)	1
5	SC-018-28	Mach. Screw 6-32 x 1/4 Phil. Pan Hd	4
6	00-447030	Speaker Assy	1
7	00-447063	Bracket - Speaker Mounting	1
8	SD-037-71	Self-Tapping Screw 6-19 x 5/16 Phil. Pan Hd	4
9	SC-018-28	Mach. Screw 6-32 x 1/4 Phil. Pan Hd	4
10	00-447030	Speaker Assy	1
11	SA-021-52	Mach. Screw Assy. 8-32 x 7/8 Phil. Pan Hd	2
12	00-446929	Spacer - Mounting (GCD)	2

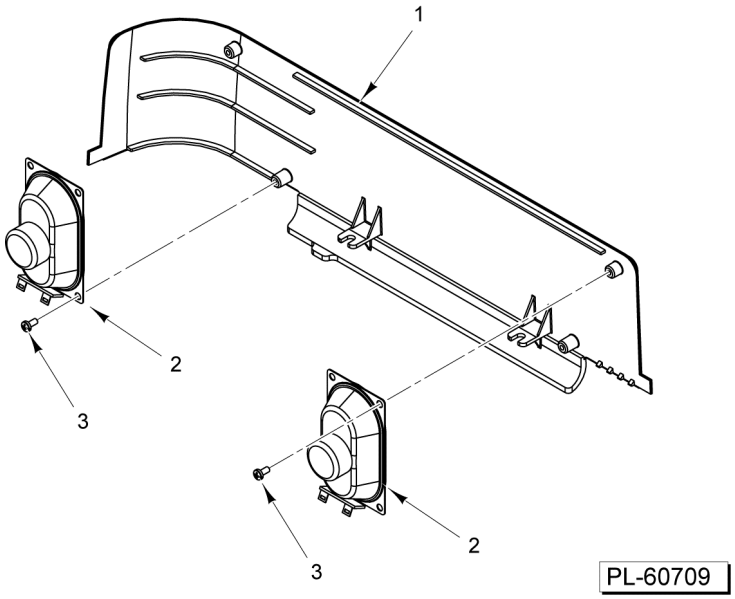

WITHOUT CUSTOMER DISPLAY
(ML-29356, ML-29357, & ML-29368)

WITHOUT CUSTOMER DISPLAY
(ML-29356, ML-29357, & ML-29368)

ILLUS. PL-60709	PART NO.	NAME OF PART	AMT.
1	00-447052	Panel - Housing Filler	1
2	00-447030	Speaker Assy	2
3	SD-015-41	Self-Tapping Screw 8-32 x 1/2 Phil. Pan Hd., Type TT	4

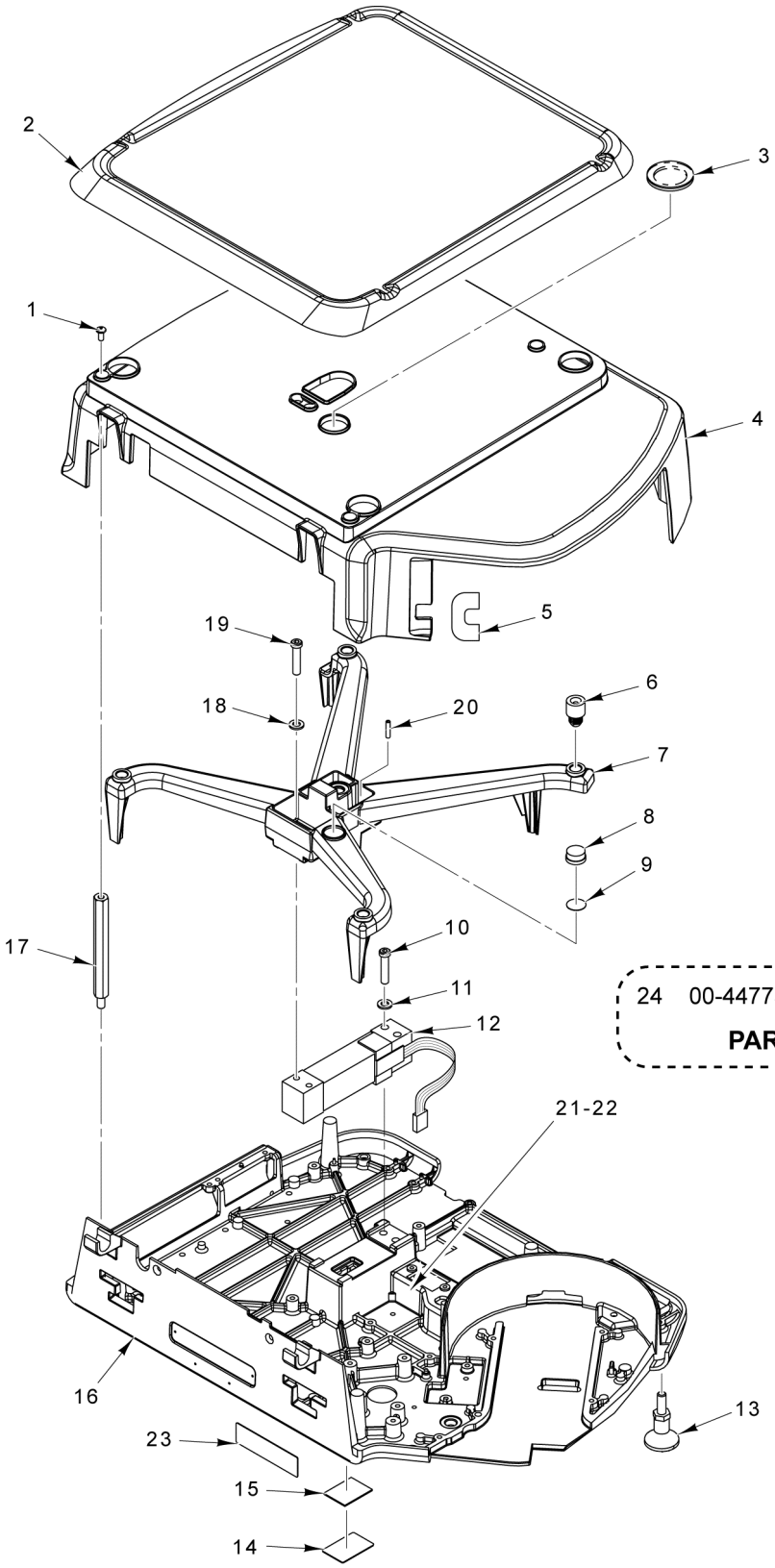

24 00-447736 Label - Cable Indentification

PART NOT ILLUSTRATED

PL-60273

WEIGHER COMPONENTS

WEIGHER COMPONENTS

ILLUS. PL-60273	PART NO.	NAME OF PART	AMT.
1	SC-129-33	Mach. Screw 8-32 x 3/8 Phil. Pan Hd	4
2	00-447083	Platter Assy	1
3	00-441243	Cover - Level Bubble (Incls. Foam Gasket)	1
4	00-447050	Housing - Main (Black)	1
5	00-447058	Shield - Infrared	1
6	00-043319	Mount - Platter	5
7	00-043302	Platter - Sub	1
8	00-043112	Level - Spirit	1
9	00-043257	Tape - Level	1
10	SC-120-70	Cap Screw 1/4-20 x 1-5/8 Hex Socket Hd	2
11	WL-008-17	Lockwasher 1/4 Internal	2
12	00-443075	Load Cell - Multiple Range (15 kg)	1
13	00-447055	Foot Assy	4
14	00-043389	Plate - Remote Weigher	1
15	00-043256	Tape	1
16	00-444750-00005	Base - Main	1
17	00-043318	Standoff (Housing Mount)	4
18	WL-008-17	Lockwasher 1/4 Internal	2
19	SC-120-70	Cap Screw 1/4-20 x 1-5/8 Hex Socket Hd	2
20	00-043286	Screw - Overload (Stop)	2
21	00-043256	Tape	1
22	00-043390	Plate - SM Port	1
23	00-184336	Label - Interference Warning	1
24	00-447736	Label - Cable Identification	1

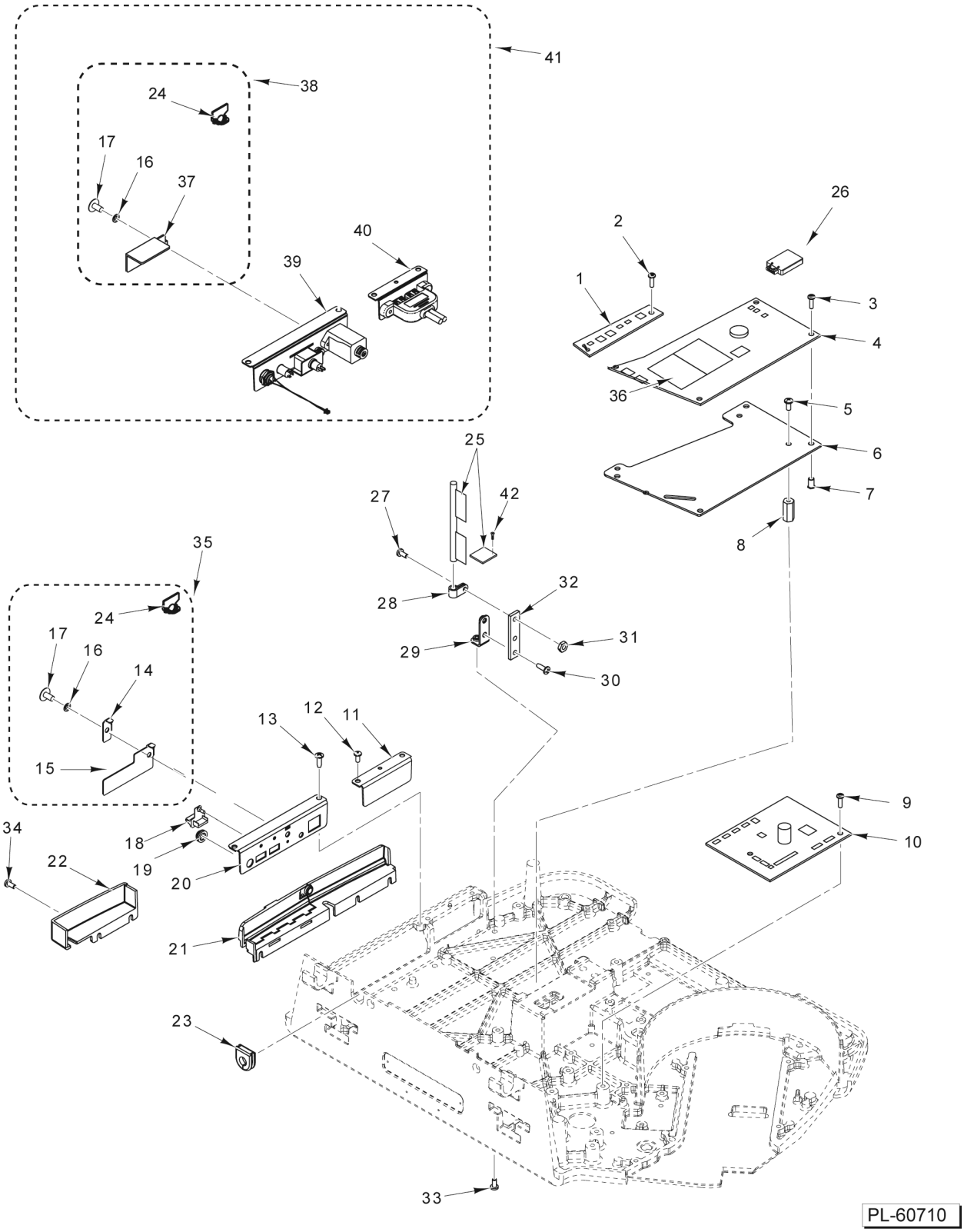

MAIN CIRCUIT COMPONENTS

MAIN CIRCUIT COMPONENTS

ILLUS. PL-60710	PART NO.	NAME OF PART	AMT.
1	00-447720	Board - Connector (Black) (With Gigibit Support)	1
2	SC-129-33	Mach. Screw 8-32 x 3/8 Phil. Pan Hd	2
3	SC-112-42	Mach. Screw 6-32 x 1/2 Phil. Pan Hd	5
4	00-447159	Board - System (Atom)	1
5	SC-129-33	Mach. Screw 8-32 x 3/8 Phil. Pan Hd	4
6	00-447012	Bracket Assy. - Main Board	1
7	00-047080-00019	Insert	5
8	00-448189	Standoff	4
9	SC-129-33	Mach. Screw 8-32 x 3/8 Phil. Pan Hd	2
10	00-447780	Board - Peripheral Control	1
11	00-447069	Bracket - GCB Blank	1
12	SD-015-40	Self-Tapping Screw 8-32 x 3/8 Phil. Pan Hd., Type TT	2
13	SD-015-40	Self-Tapping Screw 8-32 x 3/8 Phil. Pan Hd., Type TT	2
14	00-447088	Plate - Security	1
15	00-447067	Plate - USB Cover	1
16	WL-003-12	Lockwasher #8 Helical	1
17	00-183906	Screw (Special Fil. Hd.)	1
18	00-443581	Plug - USB Type A	2
19	00-443606	Seal - Power / Reset Button	1
20	00-447068	Cover - Connector	1
21	00-447070	(Optional)	1
22	00-447059	Cover - Network	1
23	00-447046	Grommet	1
24	00-444424	Seal - Wire Roto (8 In.)	1
25	00-449162	Kit - WiFi Module and Antenna (Must replace as set)	1
26	00-447723-00004	Hard Drive (Sata Dom) (32 GB) (Version 1.19.0)	1
27	SD-015-40	Self-Tapping Screw 8-32 x 3/8 Phil. Pan Hd., Type TT	1
28	00-447108	Clamp P	1
29	00-447087	Bracket - Antenna	1
30	SC-129-33	Mach. Screw 8-32 x 3/8 Phil. Pan Hd	2
31	NS-031-07	Stop Nut 8-32 Hex	1
32	00-447086	Isolator - Antenna	1
33	SD-015-40	Self-Tapping Screw 8-32 x 3/8 Phil. Pan Hd., Type TT	1
34	SD-039-75	Self-Tapping Screw 8-32 x 3/8, Type TT (Black)	3
35	00-448181	Kit - Security (Incls. Items 14, 15, 16, 17, & 24)	1
36	00-447721	Memory Board (2 GB)	1
37		Plate - Security (Part of Item 38)	1
38	00-448245	Kit - Security Seal (With Security Plate) (Incls. Items 16, 17, 24, & 37)	1
39	00-448031	Bracket Assy. (Panel Mount HT Atom)	1
40	00-448056	Bracket Assy. (USB Panel Mount)	1
41	00-448274	Kit - Service (Panel Mount) (Incls. Items 38, 39, & 40)	1
42	SC-132-06	Screw - Mach M2 X 0.4 X 4MM	2

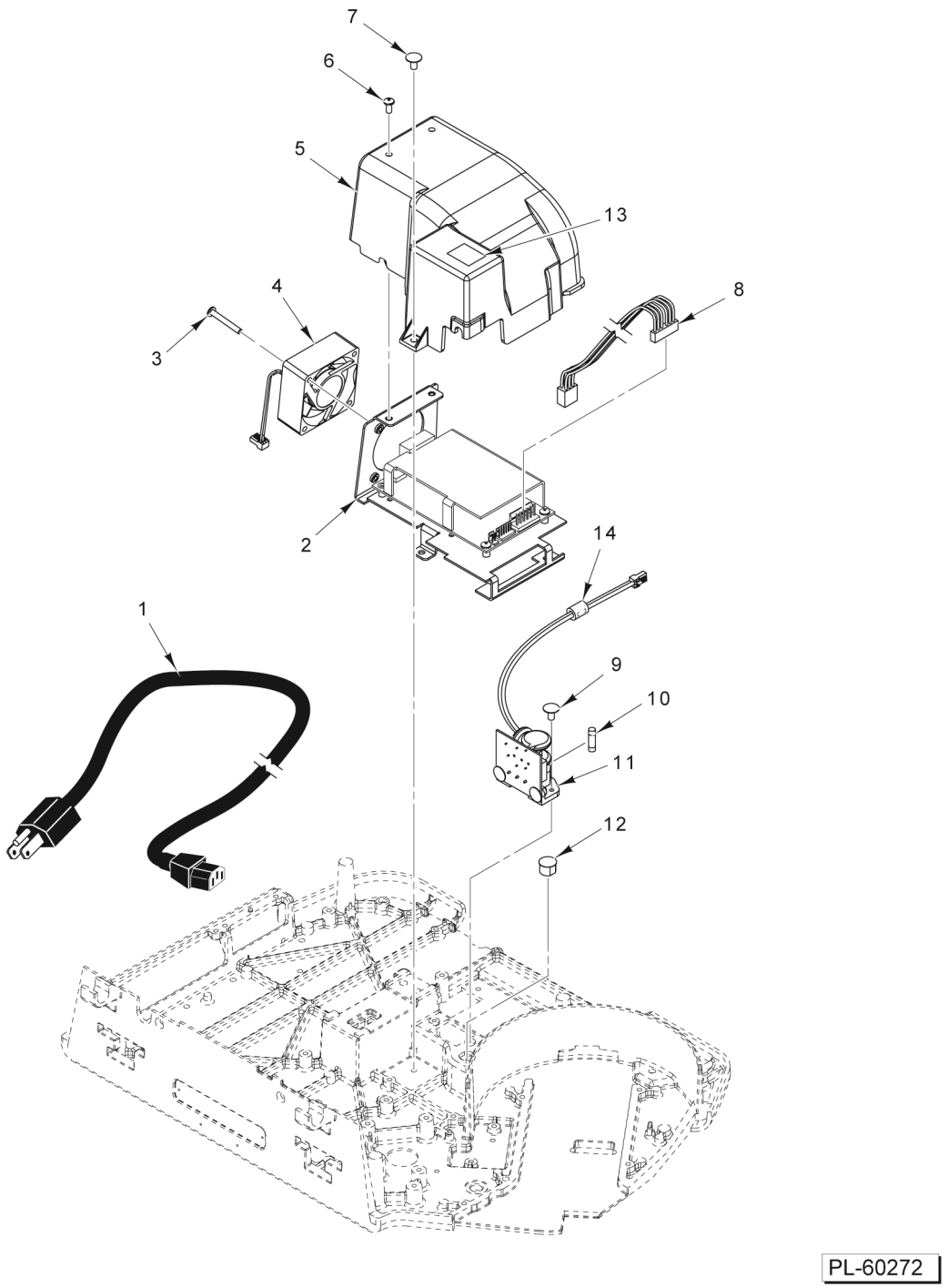

POWER SUPPLY

POWER SUPPLY

ILLUS. PL-60272	PART NO.	NAME OF PART	AMT.
1	00-044479	Cord - Power (120 V.)	1
2	00-444870-00002	Power Supply & Baffle Assy	1
3	SA-021-55	Mach Screw Assy 8-32 v 3/8 Cap Hd	2
4	00-444906	Fan Assy	1
5	00-444799	Shroud - Power Supply	1
6	SC-129-33	Mach. Screw 8-32 x 3/8 Phil. Pan Hd	2
7	SD-015-40	Self-Tapping Screw 8-32 x 3/8 Phil. Pan Hd., Type TT	1
8	00-444769	Cable Assy. - DC Power	1
9	SD-015-38	Self-Tapping Screw 6-32 x 3/8 Phil. Pan Hd., Type TT	2
10	FE-025-32	Fuse (250 V., 3.0 Amp.) (SLO) (Power Input Board)	1
11	00-448290	Board - Power Input (Incls. Item 10)	1
12	PB-005-28	Plug - Button (1/2 In.)	1
13	00-047052	Label - Fuse	1
14	00-447094	Ferrite (Clamp-On)	1

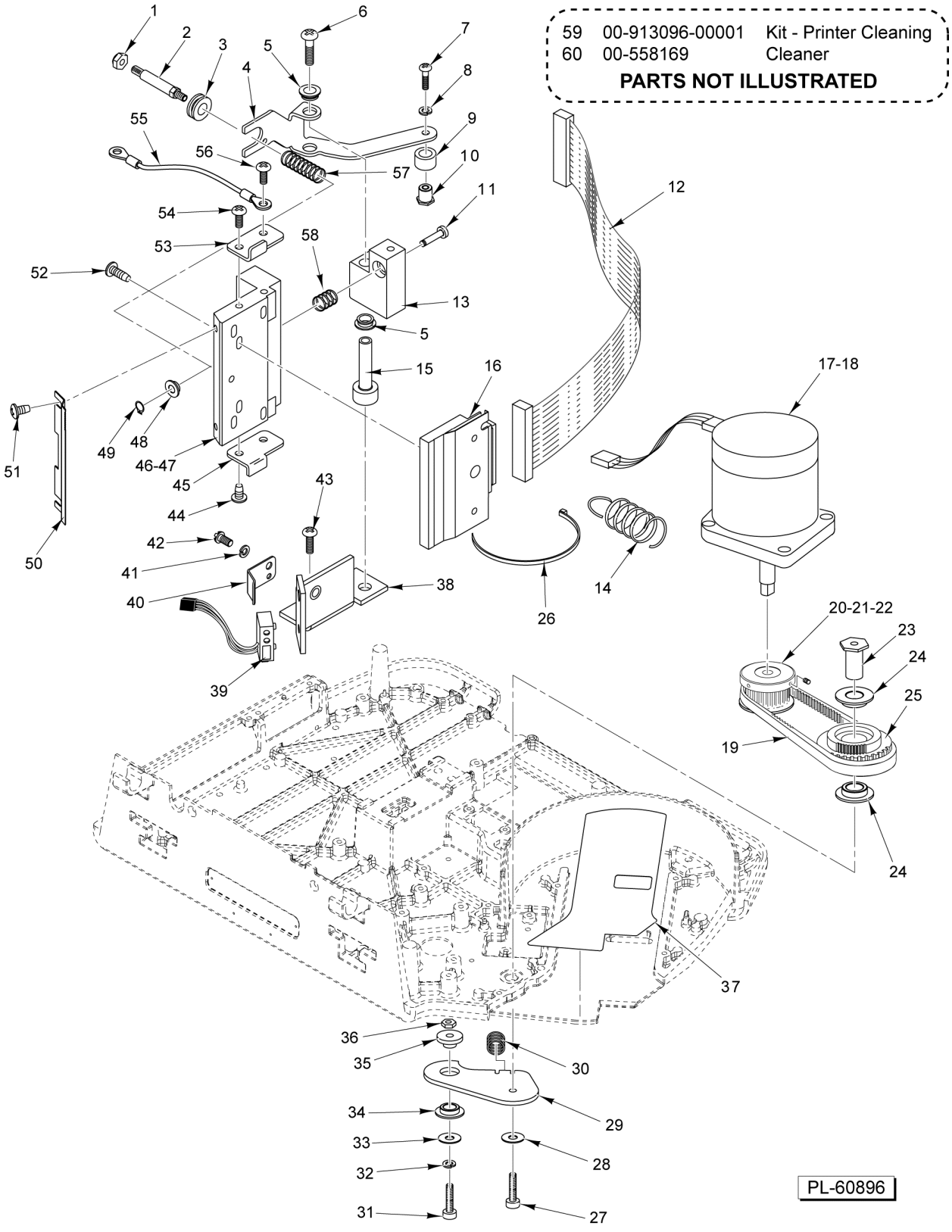
59 00-913096-00001 Kit - Printer Cleaning
60 00-558169 Cleaner
PARTS NOT ILLUSTRATED
PL-60896

PRINTER

PRINTER

ILLUS. PL-60896	PART NO.	NAME OF PART	AMT.
1	NS-031-49	Stop Nut 10-32 Hex (SST)	1
2	00-043267	Stud - Adjusting	1
3	00-043382	Bushing - Stud	1
4	00-043299	Bracket - Spring Pivot	1
5	00-043253	Bushing - Nyliner	2
6	SD-038-05	Self-Tapping Screw 8-32 x 1-3/4 Phil. Pan Hd., Type TT	1
7	SC-018-31	Mach. Screw 8-32 x 3/8 Phil. Pan Hd	1
8	WL-008-07	Lockwasher 8 Internal Shakeproof	1
9	00-043385	Roller - Pivot Arm	1
10	00-043386	Retainer - Roller	1
11	00-047424	Shaft - Printhead Pivot	1
12	00-444846	Cable Assy. - Printhead	1
13	00-047423	Pivot Block - Printhead	1
14	00-043387	Spring - Extension	1
15	00-047441	Sleeve - Pivot	1
16	00-448003	Printhead - Thermal (Kyocera)	1
17	00-440142-00002	Motor Assy. - Stepper	1
18	SD-015-40	Self-Tapping Screw 8-32 x 3/8 Phil. Pan Hd., Type TT	3
19	00-442823	Belt - Timing	1
20	00-442822	Pulley - Take-Up Motor	1
21	SC-047-74	Set Screw 8-32 x 1/4 Hdls. Cup Pt	2
22	00-512987	Adhesive (Loctite #222, Purple)	AR
23	00-441758	Shaft - Pulley & Gear	1
24	00-043365	Bushing	2
25	00-043250	Pulley & Gear Assy. (Incls. Item 24)	1
26	00-255502	Tie - Cable Locking	1
27	SC-092-36	Cap Screw 6-32 x 1/2 Hex Socket Hd	1
28	WL-008-02	Lockwasher #6 Internal Shakeproof	1
29	00-447373	Plate - Pivot (Incls. Item 34)	1
30	00-048374	Spring - Printhead Adjusting	1
31	SC-111-83	Cap Screw 6-32 x 3/4 Hex Socket Hd	1
32	WL-008-02	Lockwasher #6 Internal Shakeproof	1
33	WS-019-41	Washer (SST)	1
34	00-043365	Bushing	1
35	00-441760	Bushing - Gear Adjusting	1
36	NS-031-03	Stop Nut 6-32 Hex	1
37	00-441701	Label - Anti-Friction	1
38	00-047442	Bracket - Label Taken Mtg	1
39	00-043610	Sensor Assy. - Label Taken	1
40	00-043394	Bracket - Label Taken	1
41	WL-008-07	Lockwasher 8 Internal Shakeproof	1
42	SC-018-31	Mach. Screw 8-32 x 3/8 Phil. Pan Hd	1
43	SD-015-40	Self-Tapping Screw 8-32 x 3/8 Phil. Pan Hd., Type TT	2
44	SD-015-37	Self-Tapping Screw 6-32 x 1/4 Phil. Pan Hd., Type TT	2
45	00-047438	Stop - Printhead Lower	1
46	00-442996	Heat Sink and Bushing Assy. (Incls. Item 48)	1
47	00-519504	Thermo Joint Compound (2 Oz.)	AR
48	00-043365	Bushing	2
49	RR-006-22	Retaining Ring 1/4 In. (SST)	1
50	00-032887	Tearbar	1
51	SD-015-37	Self-Tapping Screw 6-32 x 1/4 Phil. Pan Hd., Type TT	2
52	SA-021-46	Screw Assy. M3 x 0.5 x 12 mm Phil. Pan Hd	2
53	00-047437	Stop - Printhead Upper	1
54	SD-015-37	Self-Tapping Screw 6-32 x 1/4 Phil. Pan Hd., Type TT	1
55	00-049396	Wire - Drain (Ground)	1
56	SD-015-37	Self-Tapping Screw 6-32 x 1/4 Phil. Pan Hd., Type TT	1
57	00-043333	Spring - Printhead	1
58	00-048374	Spring - Printhead Adjusting	1
59	00-913096-00001	Kit - Thermal Printer Cleaning	1
60	00-558169	Cleaner (Electronics) (12 Oz. Can)	AR

50 00-444875-00005 Cassette Assy.

PART NOT ILLUSTRATED

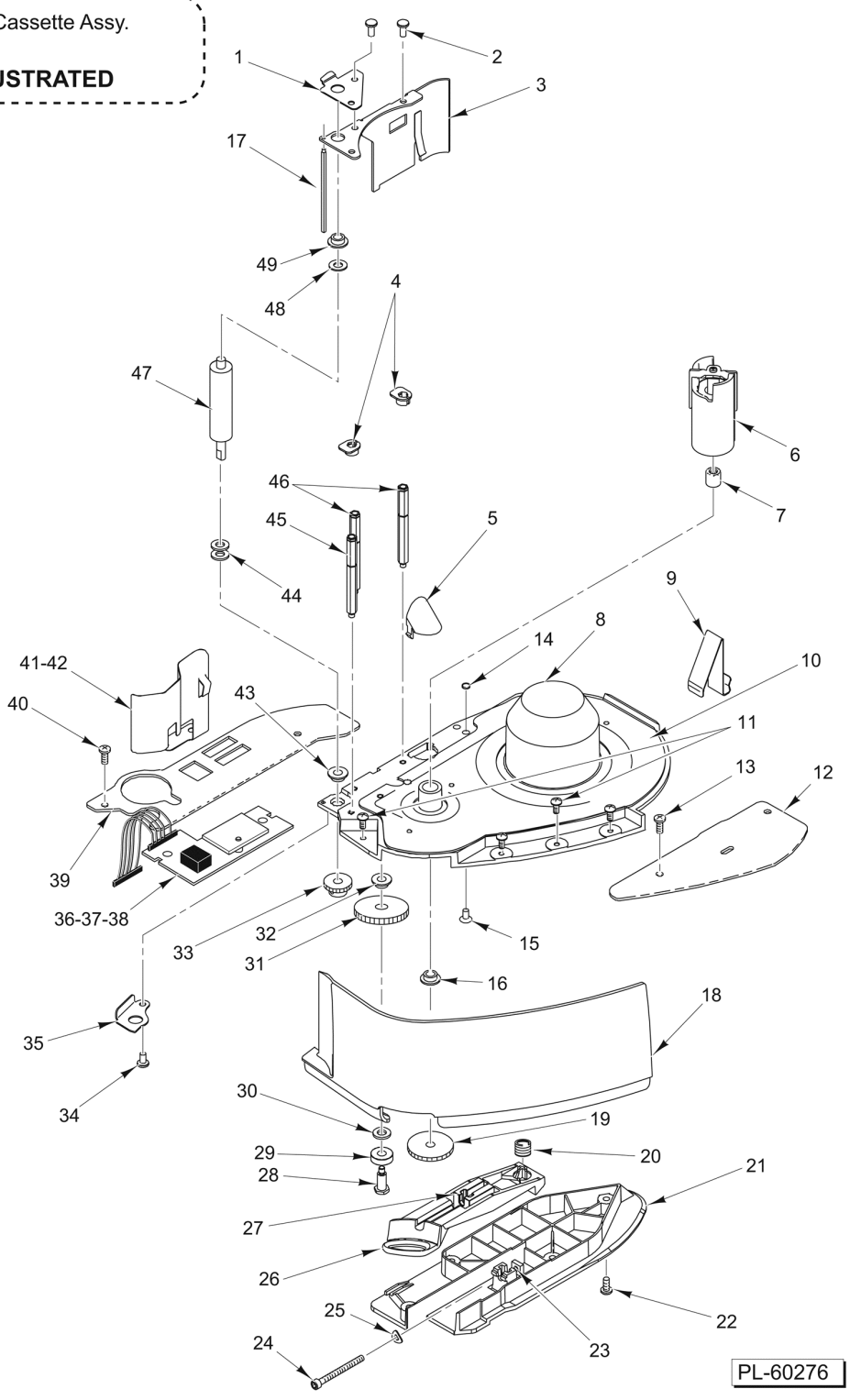

CASSETTE
(WIDE LABEL)

CASSETTE
(WIDE LABEL)

ILLUS. PL-60276	PART NO.	NAME OF PART	AMT.
1	00-047456	Plate - Cassette Locating (Upper)	1
2	00-048489	Mach. Screw 8-32 x 3/8 Phil. Pan Hd	3
3	00-047392	Retaining Plate - Roller	1
4	00-043369	Guide - Label	2
5	00-043367	Reflector	1
6	00-444660	Take-Up Assy	1
7	00-043396	Needle Bearing	1
8	00-043351	Base - Cassette	1
9	00-443735	Spring - Cassette Eject	1
10	00-440635	Label - Threading Instructions	1
11	SA-021-39	Screw Assy. 8-32 x 3/8 Phil. Pan Hd	4
12	00-043343	Rail - Guide (RH)	1
13	SD-015-40	Self-Tapping Screw 8-32 x 3/8 Phil. Pan Hd., Type TT	2
14	00-446589	Magnet - Disc	1
15	00-446917	Mach. Screw 8-32 x 1/8 Phil. Pan Hd	1
16	00-043365	Bushing	1
17	00-043357	Peel Bar	1
18	00-447051	Cover - Cassette Front	1
19	00-043362	Gear - Take-Up (Incls. Set Screw)	1
20	00-043356	Spring - Cassette Latch	1
21	00-043355	Guide - Cassette	1
22	SD-015-40	Self-Tapping Screw 8-32 x 3/8 Phil. Pan Hd., Type TT	4
23	NS-008-25	Nut 8-32 Sq. Hd	1
24	00-441172	Cap Screw 8-32 x 1-3/4 Hex Socket Hd	1
25	00-043271	Washer - Wavy	1
26	00-043353	Latch - Cassette	1
27	00-043354	Pivot Block - Adjust	1
28	00-043363	Shaft - Idler	1
29	00-131761	Ball Bearing - Double-Shielded Radial	1
30	00-043269	Washer	1
31	00-032974	Gear - Idler (Incls. Item 32)	1
32	00-043365	Bushing	1
33	00-043360	Gear - Roller (Incls. Set Screw)	1
34	SC-018-34	Mach. Screw 8-32 x 1/2 Phil. Pan Hd	1
35	00-047457	Plate - Cassette Locating (Lower)	1
36	00-446820	Kit - Media Hall Sensor	1
37	00-044631	Insulator - Media Sensor Board	1
38	SD-015-40	Self-Tapping Screw 8-32 x 3/8 Phil. Pan Hd., Type TT	2
39	00-043270	Rail - Guide (LH)	1
40	SD-015-40	Self-Tapping Screw 8-32 x 3/8 Phil. Pan Hd., Type TT	2
41	00-046479	Spring - Label Guide	1
42	SD-015-40	Self-Tapping Screw 8-32 x 3/8 Phil. Pan Hd., Type TT	1
43	00-047458	Bearing - Flange	1
44	00-043269	Washer	2
45	00-047455	Standoff	1
46	00-032914	Standoff	2
47	00-047506	Roller - Print	1
48	00-043269	Washer	1
49	00-043365	Bushing	1
50	00-444875-00005	Cassette Assy	1

53 00-447770 Cassette Assy.

PART NOT ILLUSTRATED

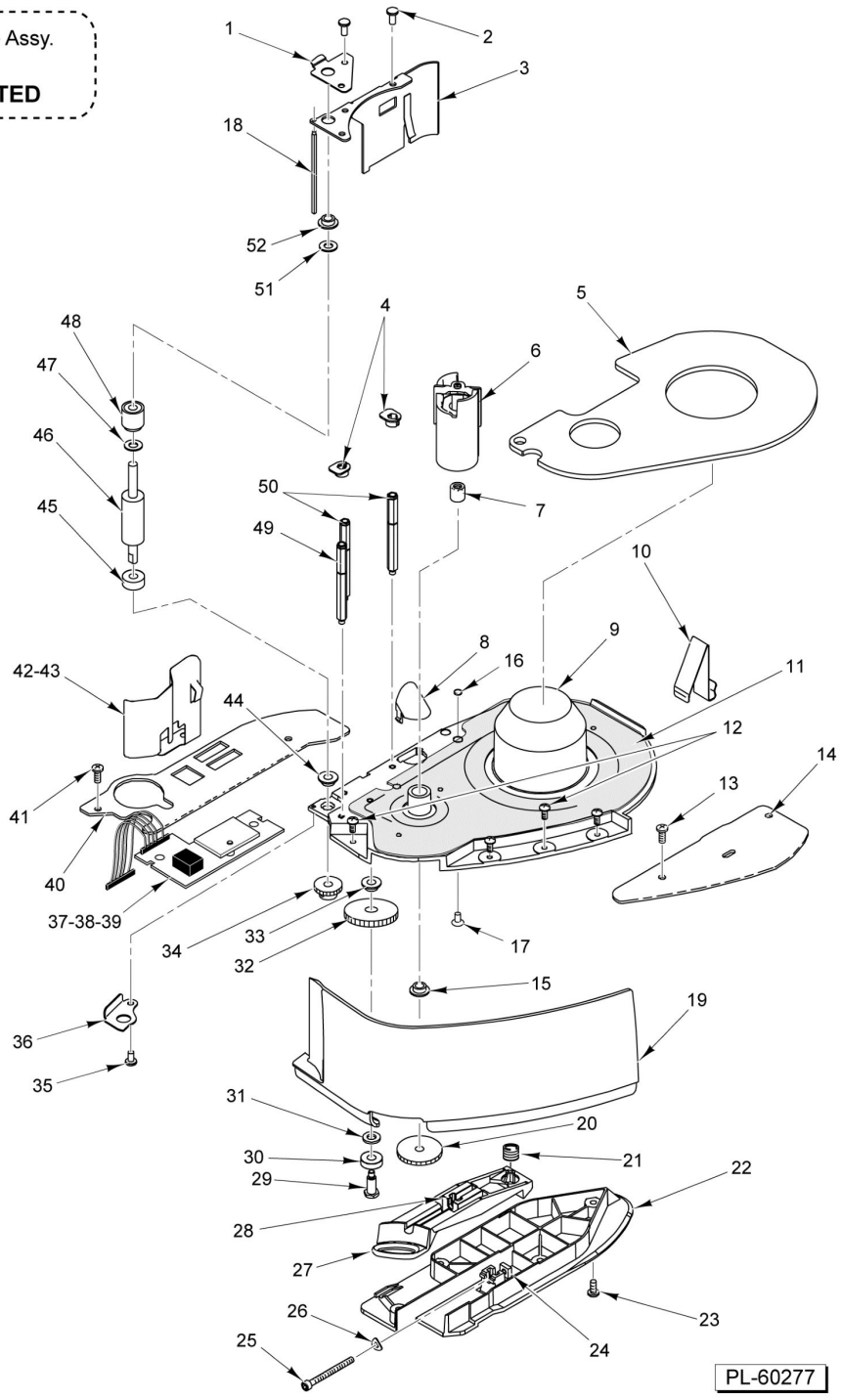

CASSETTE
(NARROW LABEL)

CASSETTE
(NARROW LABEL)

ILLUS. PL-60277	PART NO.	NAME OF PART	AMT.
1	00-047456	Plate - Cassette Locating (Upper)	1
2	00-048489	Mach. Screw 8-32 x 3/8 Phil. Pan Hd	3
3	00-047392	Retaining Plate - Roller	1
4	00-043369	Guide - Label	2
5	00-032905	Spacer - Narrow Label	1
6	00-444660	Take-Up Assy	1
7	00-043396	Needle Bearing	1
8	00-043367	Reflector	1
9	00-043351	Base - Cassette	1
10	00-443735	Spring - Cassette Eject	1
11	00-440635	Label - Threading Instructions	1
12	SA-021-39	Screw Assy. 8-32 x 3/8 Phil. Pan Hd	4
13	SD-015-40	Self-Tapping Screw 8-32 x 3/8 Phil. Pan Hd., Type TT	2
14	00-043343	Rail - Guide (RH)	1
15	00-043365	Bushing	1
16	00-446589	Magnet - Disc	1
17	00-446917	Mach. Screw 8-32 x 1/8 Phil. Pan Hd	1
18	00-043357	Peel Bar	1
19	00-447051	Cover - Cassette Front	1
20	00-043362	Gear - Take-Up (Incls. Set Screw)	1
21	00-043356	Spring - Cassette Latch	1
22	00-043355	Guide - Cassette	1
23	SD-015-40	Self-Tapping Screw 8-32 x 3/8 Phil. Pan Hd., Type TT	4
24	NS-008-25	Nut 8-32 Sq. Hd	1
25	00-441172	Cap Screw 8-32 x 1-3/4 Hex Socket Hd	1
26	00-043271	Washer - Wavy	1
27	00-043353	Latch - Cassette	1
28	00-043354	Pivot Block - Adjust	1
29	00-043363	Shaft - Idler	1
30	00-131761	Ball Bearing - Double-Shielded Radial	1
31	00-043269	Washer	1
32	00-032974	Gear - Idler (Incls. Item 33)	1
33	00-043365	Bushing	1
34	00-043360	Gear - Roller (Incls. Set Screw)	1
35	SC-018-34	Mach. Screw 8-32 x 1/2 Phil. Pan Hd	1
36	00-047457	Plate - Cassette Locating (Lower)	1
37	00-446820	Kit - Media Hall Sensor	1
38	00-044631	Insulator - Media Sensor Board	1
39	SD-015-40	Self-Tapping Screw 8-32 x 3/8 Phil. Pan Hd., Type TT	2
40	00-043270	Rail - Guide (LH)	1
41	SD-015-40	Self-Tapping Screw 8-32 x 3/8 Phil. Pan Hd., Type TT	2
42	00-046479	Spring - Label Guide	1
43	SD-015-40	Self-Tapping Screw 8-32 x 3/8 Phil. Pan Hd., Type TT	1
44	00-047458	Bearing - Flange	1
45	00-032930	Spacer - Narrow Roller Bottom	1
46	00-047505	Roller - Print	1
47	00-032915	Spacer - Narrow Roller	1
48	00-047504	Support - Roller	1
49	00-047455	Standoff	1
50	00-032914	Standoff	2
51	00-043269	Washer	1
52	00-043365	Bushing	1
53	00-447770	Cassette Assy. - Narrow Label	1

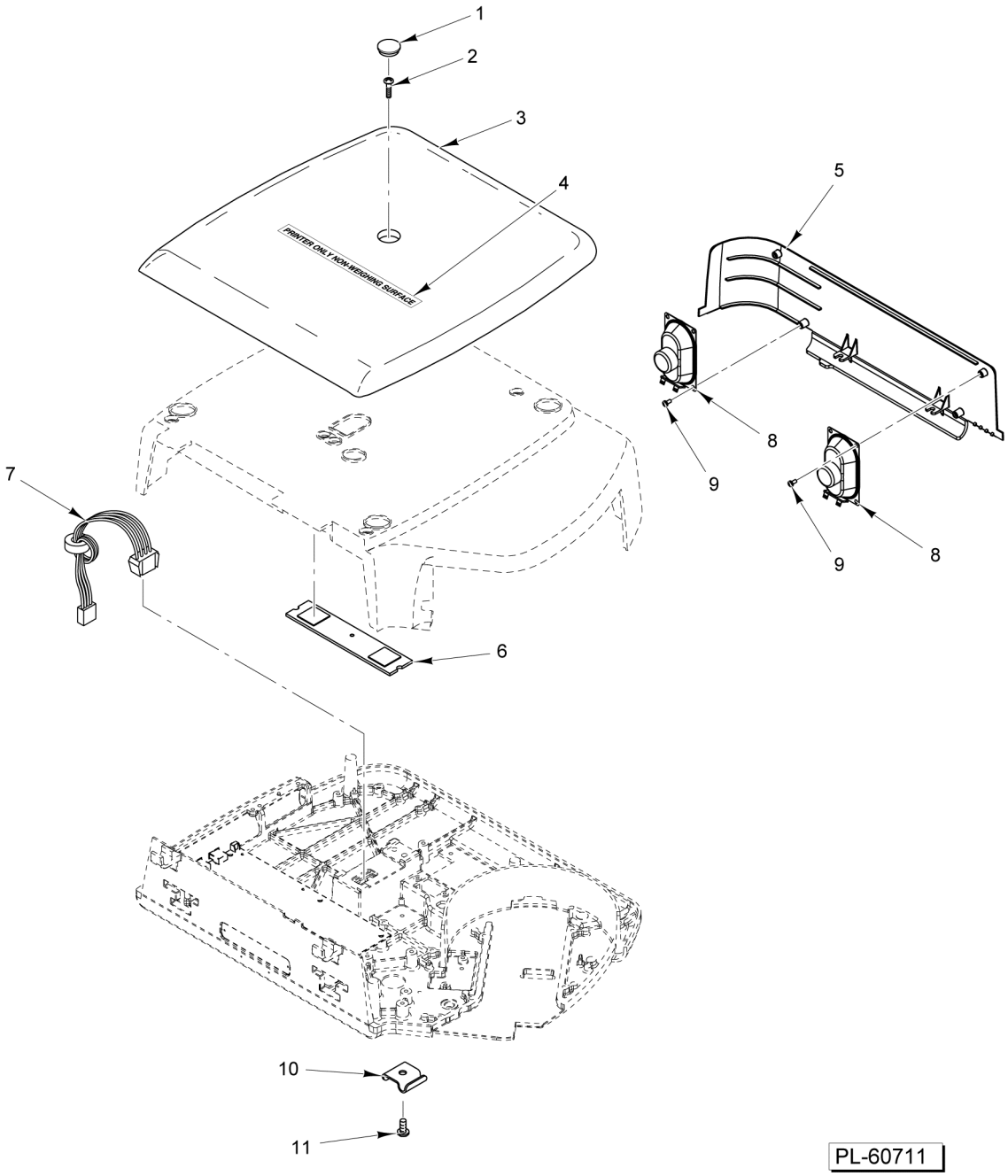

PRINTER ONLY (ML-29358)

PRINTER ONLY (ML-29358)

ILLUS. PL-60711	PART NO.	NAME OF PART	AMT.
1	00-447137	Plug - Cover	1
2	SC-018-31	Mach. Screw 8-32 x 3/8 Phil. Pan Hd	1
3	00-445262-00005	Cover - Printer Top (Black)	1
4	00-445215	Label - Printer	1
5	00-447052	Panel - Housing Filler	1
6	00-447111	Bracket Assy. - Cover	1
7	00-445270-00001	Cable Assy	1
8	00-447030	Speaker Assy	2
9	SC-018-28	Mach. Screw 6-32 x 1/4 Phil. Pan Hd	4
10	00-443053	Clamp	1
11	SD-015-41	Self-Tapping Screw 8-32 x 1/2 Phil. Pan Hd., Type TT	1

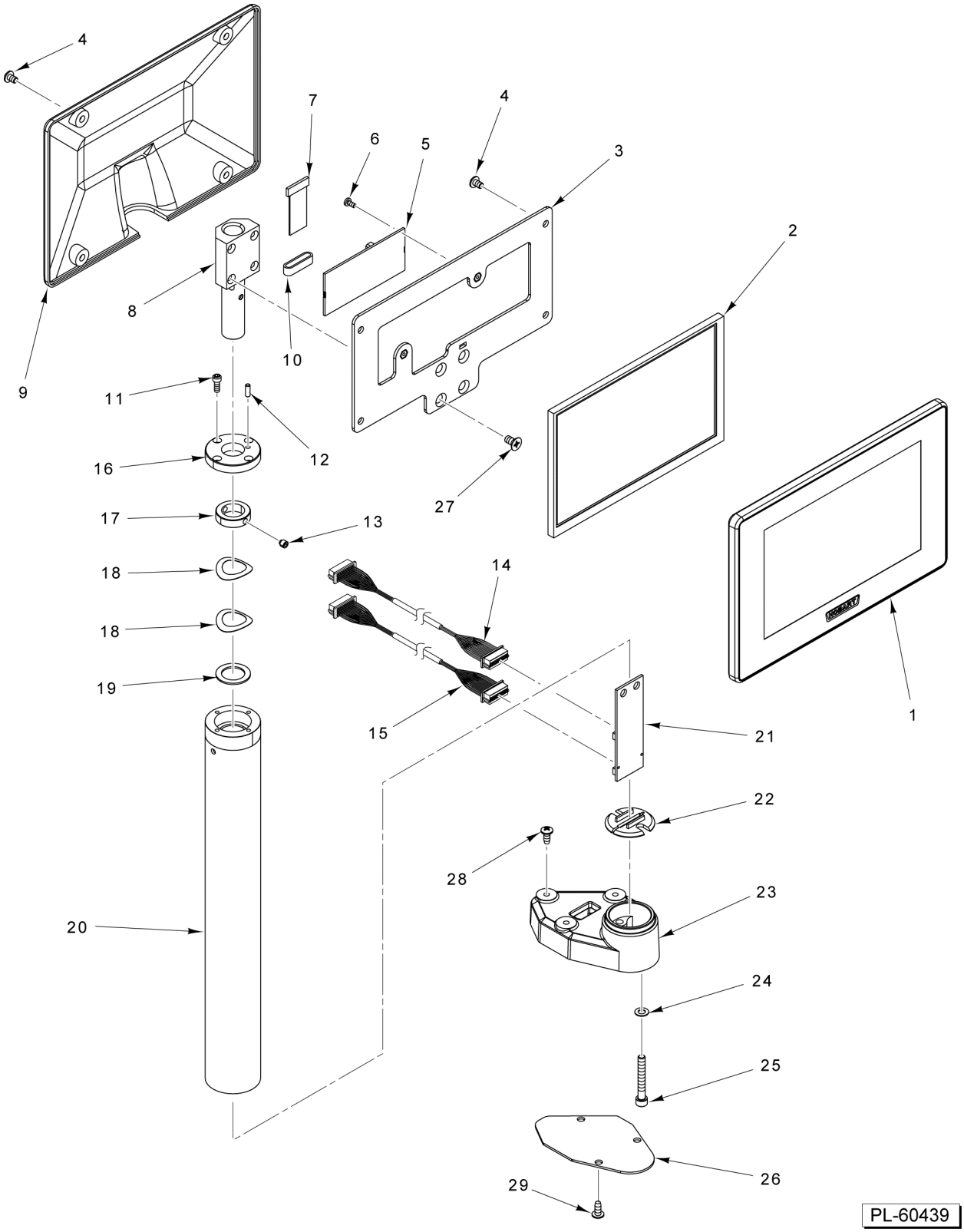

ELEVATED DISPLAY
(7 IN.)

ELEVATED DISPLAY
(7 IN.)

ILLUS. PL-60439	PART NO.	NAME OF PART	AMT.
1	00-447763	Housing Assy. (Front)	1
2	00-447762	Display (Color)	1
3	00-447122	Plate - Display Retainer	1
4	SC-018-30	Mach. Screw 8-32 x 1/4 Phil. Pan Hd	8
5	00-447162	Board Assy	1
6	SC-018-68	Mach. Screw 4-40 x 1/4 Phil. Pan Hd	2
7	00-447199	Cable Assy	1
8	00-447148	Block Assy. - Pivot	1
9	00-447126	Housing Assy. (Rear)	1
10	00-447066	Cable - Flex Ribbon (Ferrite)	1
11	SC-120-37	Cap Screw 6-32 x 3/8 Hex Socket Hd. (SST)	4
12	00-447143	Pin - Dowel	1
13	SC-088-55	Set Screw 10-32 x 3/16 Hex Hdls., Half Dog Pt	2
14	00-447032	Cable Assy. (19 In.) (Located Inside Post)	1
15	00-447192	Cable Assy. (30 In.) (Located Inside Scale)	1
16	00-447710	Cap - Display Mount	1
17	00-447712	Collar	1
18	00-447714	Washer - Spring	2
19	00-447713	Washer - Thrust	1
20	00-447140	Tube - Display Mounting	1
21	00-447190	Board Assy. (Repeater)	1
22	00-447686	Retainer (PCB)	1
23	00-447132	Base - Elevated Display	1
24	WL-008-13	Lockwasher #10 Internal Shakeproof	2
25	SC-124-37	Cap Screw 10-24 x 1-3/8 Hex Socket Hd	2
26	00-447131	Plate - Cover	1
27	SC-020-23	Mach. Screw 10-24 x 3/8 Phil. Flat Hd	4
28	SD-015-40	Self-Tapping Screw 8-32 x 3/8 Phil. Pan Hd., Type TT	3
29	SD-015-40	Self-Tapping Screw 8-32 x 3/8 Phil. Pan Hd., Type TT	3

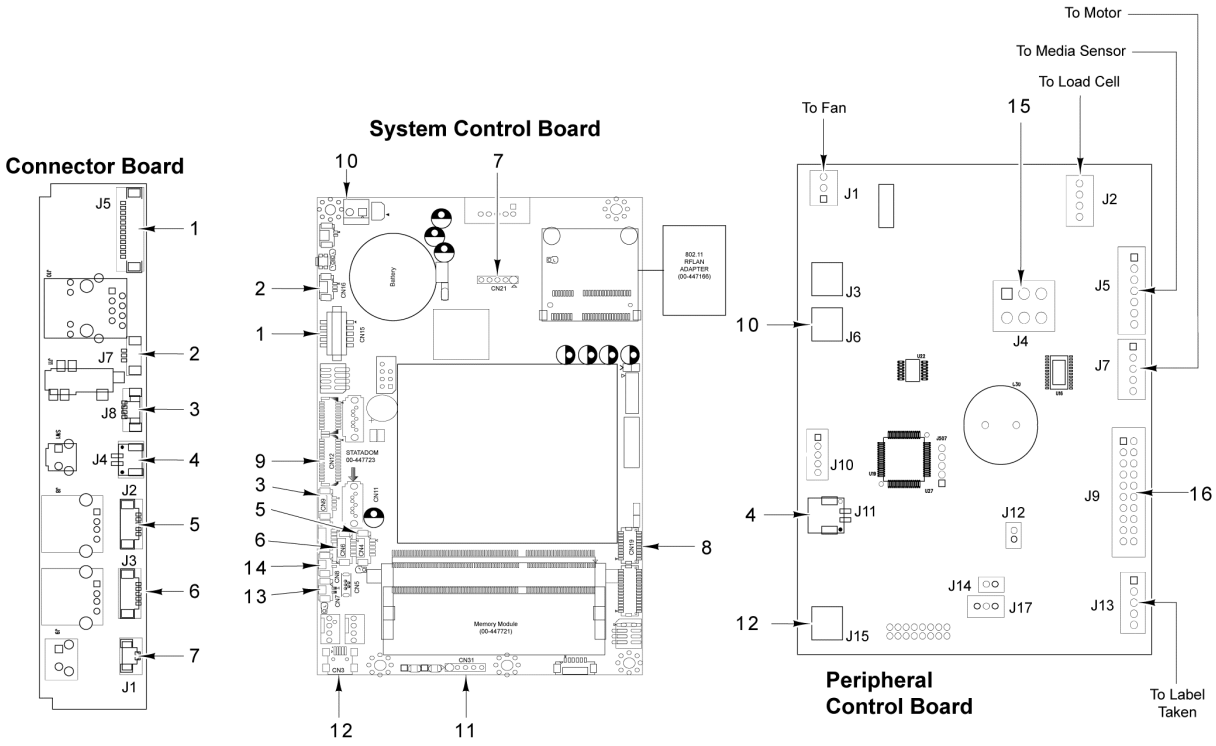

PL-60712

CABLES

CABLES

ILLUS. PL-60712	PART NO.	NAME OF PART	AMT.
1	00-447524	Cable Assy. (Ethernet STD)	1
2	00-447028	Cable Assy. (Ethernet LED's)	1
3	00-447029	Cable Assy. (Audio)	1
4	00-447025	Cable Assy. (Service SW)	1
5	00-447024	Cable Assy. (USB Hub STD)	1
6	00-447024	Cable Assy. (USB Hub STD)	1
7	00-447924	Cable Assy. (Reboot SW)	1
8	00-447032	Cable Assy. (Customer Display, LVDS) (7 In. Elevated Display)	1
9	00-448047	Cable Assy. (Operator Display, LVDS)	1
10	00-447523	Cable Assy. (24 V. Power)	1
11	00-447167	Cable Assy. (Touchscreen)	1
12	00-447544	Cable Assy. - USB (Host) (USB Host)	1
13	00-447030	Cable Assy. - Speaker (Left Channel)	1
14	00-447030	Cable Assy. - Speaker (Right Channel)	1
15	00-444769	Cable Assy. - DC Power	1
16	00-444846	Cable Assy. - Printhead	1

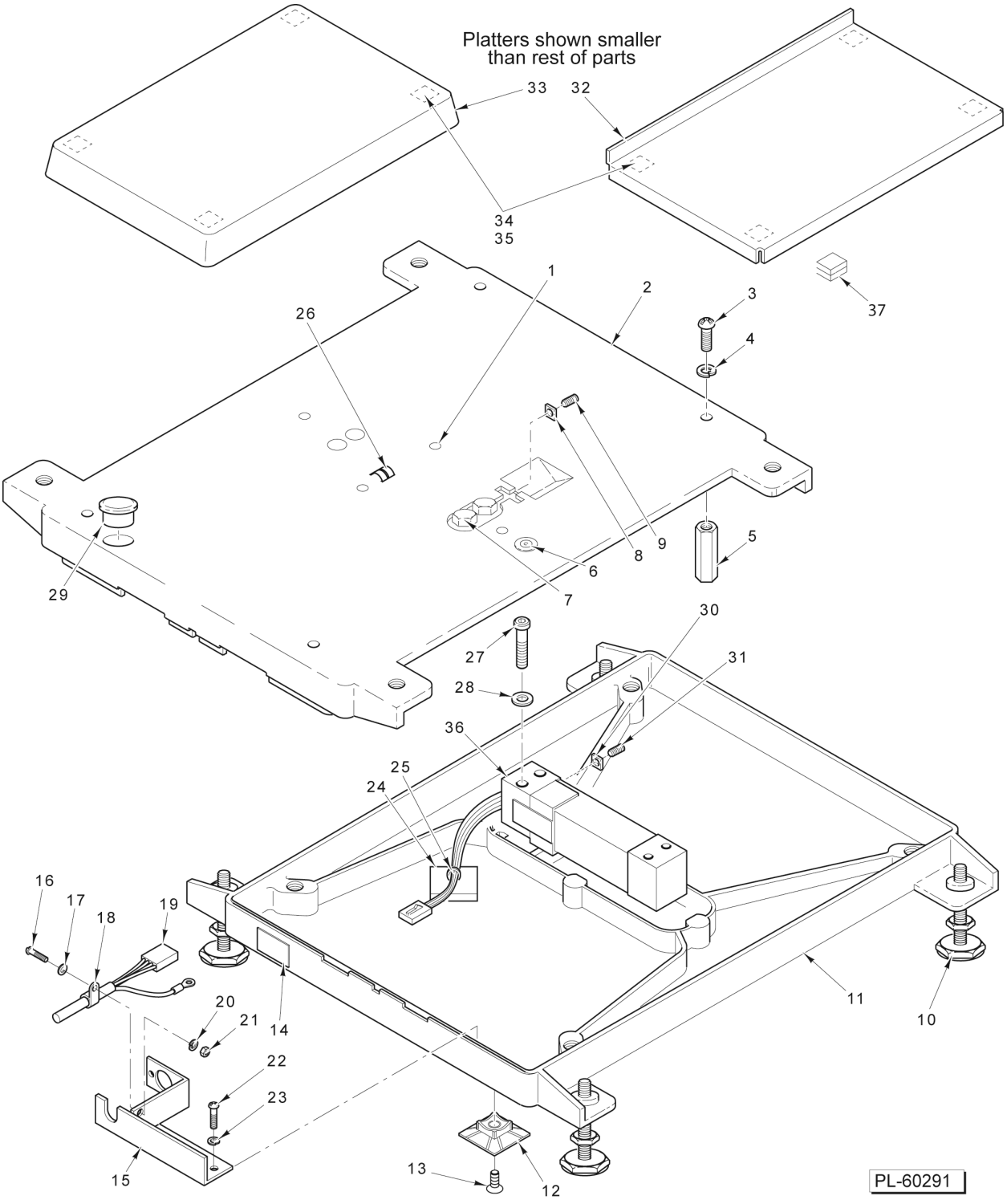

SCALE UNIT
(USED WITH TWO-PIECE SCALE/PRINTER)

SCALE UNIT
(USED WITH TWO-PIECE SCALE/PRINTER)

ILLUS. PL-60291	PART NO.	NAME OF PART	AMT.
1	SC-123-20	Set Screw 10-32 x 3/8 Hex Hdls., Socket Hd	2
2	00-041559	Support - Platter	1
3	SC-113-08	Mach. Screw 10-32 x 1/2 Phil. Pan Hd	4
4	WL-004-40	Lockwasher 10 Helical	4
5	00-441780	Stop - Loadcell	4
6	00-013931	Level - Spirit	1
7	SC-110-12	Cap Screw 1/4-20 x 5/8 Hex Hd	2
8	NS-046-58	Nut 10-32 Square	1
9	SC-123-20	Set Screw 10-32 x 3/8 Hex Hdls., Socket Hd	1
10	00-093160	Foot - Leveling Screw	4
11	00-042604	Base Assy	1
12	00-446051	Holder - Tie-Down	1
13	SC-022-07	Mach. Screw 8-32 x 1/2 Slotted Flat Hd. (SST)	1
14	00-184534	Label - Capacity	1
15	00-441657	Clamp - Cable	1
16	SC-018-31	Mach. Screw 8-32 x 3/8 Phil. Pan Hd	1
17	WS-019-41	Washer (SST)	1
18	00-253363	Clamp	1
19	00-183634	Cable - Scale	1
20	WL-003-12	Lockwasher #8 Helical	1
21	NS-009-12	Nut 8-32 Hex	1
22	SC-018-31	Mach. Screw 8-32 x 3/8 Phil. Pan Hd	2
23	WL-003-12	Lockwasher #8 Helical	2
24	00-255503	Mount - Cable Tie	1
25	00-251199	Tie - Cable (4 In. Long)	1
26	00-184929	Contact - Compression Spring (Qty. of 8)	AR
27	SC-120-70	Cap Screw 1/4-20 x 1-5/8 Hex Socket Hd	2
28	WL-003-39	Lockwasher 1/4 Light	2
29	00-041562	Plug - Transparent (1/2)	1
30	NS-046-58	Nut 10-32 Square	1
31	SC-123-20	Set Screw 10-32 x 3/8 Hex Hdls., Socket Hd	1
32	00-043813	Platter (Incls. Items 34 & 35)	1
33	00-043812	Platter (Incls. Items 34 & 35)	1
34	00-258959	Fastener - Dual Lock	4
35	00-258958	Fastener - Dual Lock	4
36	00-443075	Load Cell - Multiple Range (15 kg) (ML-29256)	1
37	00-259185	Pad - Platter	4