CATALOG OF REPLACEMENT PARTS



HSU440 SPIRAL MIXER

ML-141041

A product of HOBART 701 S. RIDGE AVENUE TROY, OHIO 45374-0001

FORM 43262 (March 2025)

 © HOBART 2025

Table of Contents

5 CONTROLS
7 ELECTRICAL COMPONENTS
9 BOWL THRUST BLOCK ROLLER
11 MIXER MOTOR AND COMPONENTS
13 BOWL MOTOR AND COMPONENTS
15 PANELS AND COVERS
17 BOWL GUARD

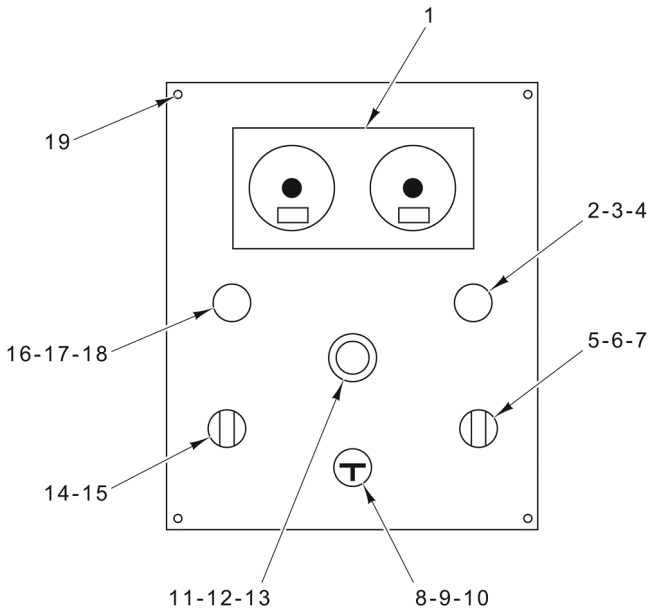

PL-60048

CONTROLS

CONTROLS

ILLUS. PL-60048	PART NO.	NAME OF PART	AMT.
1	00-917671-00015	Timer	1
2	00-917671-00108	Switch (Start 2)	1
3	00-917671-00104	Contact	1
4	00-917671-00109	Lamp - LED	1
5	00-917671-00102	Switch - Head Selector (2-Position)	1
6	00-917671-00104	Contact	1
7	00-917671-00105	Contact	3
8	00-917671-00189	Button - Impulse	1
9	00-917671-00104	Contact	1
10	00-917671-00111	Button - Plate With Inscription	1
11	00-917671-00106	Contact - Stop Button	1
12	00-917671-00103	Contact	1
13	00-917671-00107	Contact	1
14	00-917671-00102	Switch - Head Selector (2-Position)	1
15	00-917671-00103	Contact	1
16	00-917671-00108	Switch (Start 1)	1
17	00-917671-00104	Contact	1
18	00-917671-00109	Lamp - LED	1
19		Screw M3.9 x 16 Hex Button Hd	4

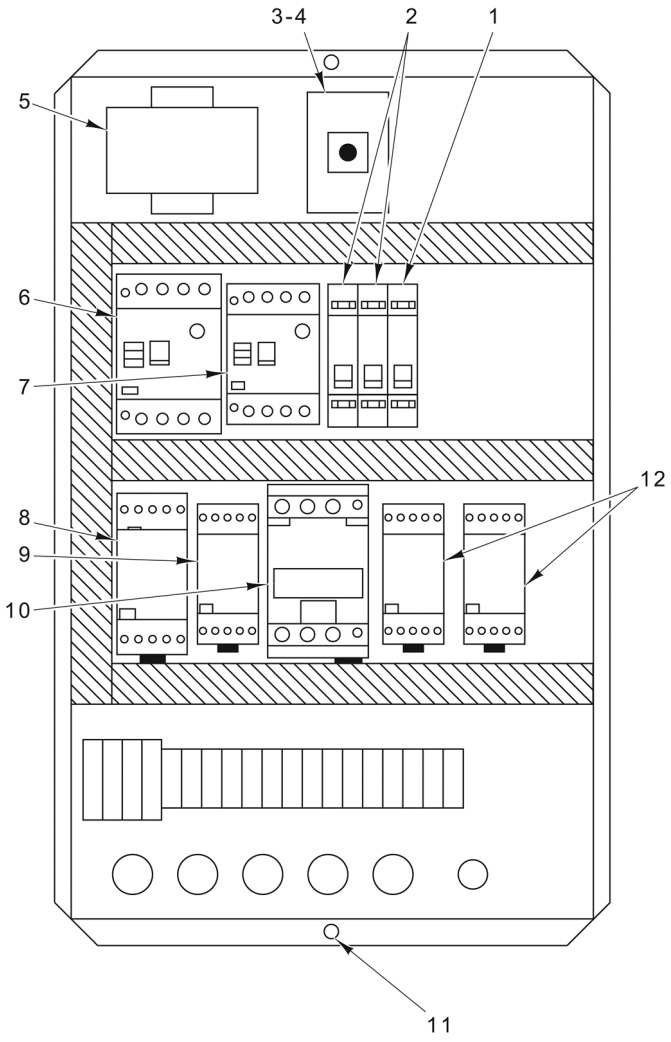

PL-60049

ELECTRICAL COMPONENTS

ELECTRICAL COMPONENTS

ILLUS. PL-60049	PART NO.	NAME OF PART	AMT.
1	00-917671-00093	Breaker - Circuit Therm. Magn	1
2	00-917671-00092	Breaker - Circuit Therm. Magn	2
3	00-917671-00183	Switch - Main	1
4	00-917671-00091	Shaft - Extensions	1
5	00-917671-00184	Transformer (250 VA, 208-230 V., 24A)	1
6	00-917671-00185	Breaker - Circuit	1
7	00-917671-00101	Breaker - Circuit Motor	1
8	00-917671-00186	Contactor	1
9	00-917671-00094	Contactor	1
10	00-917671-00187	Contactor	1
11		Screw M6 x 12 Hex Button Hd	2
12	00-917671-00188	Contactor	2

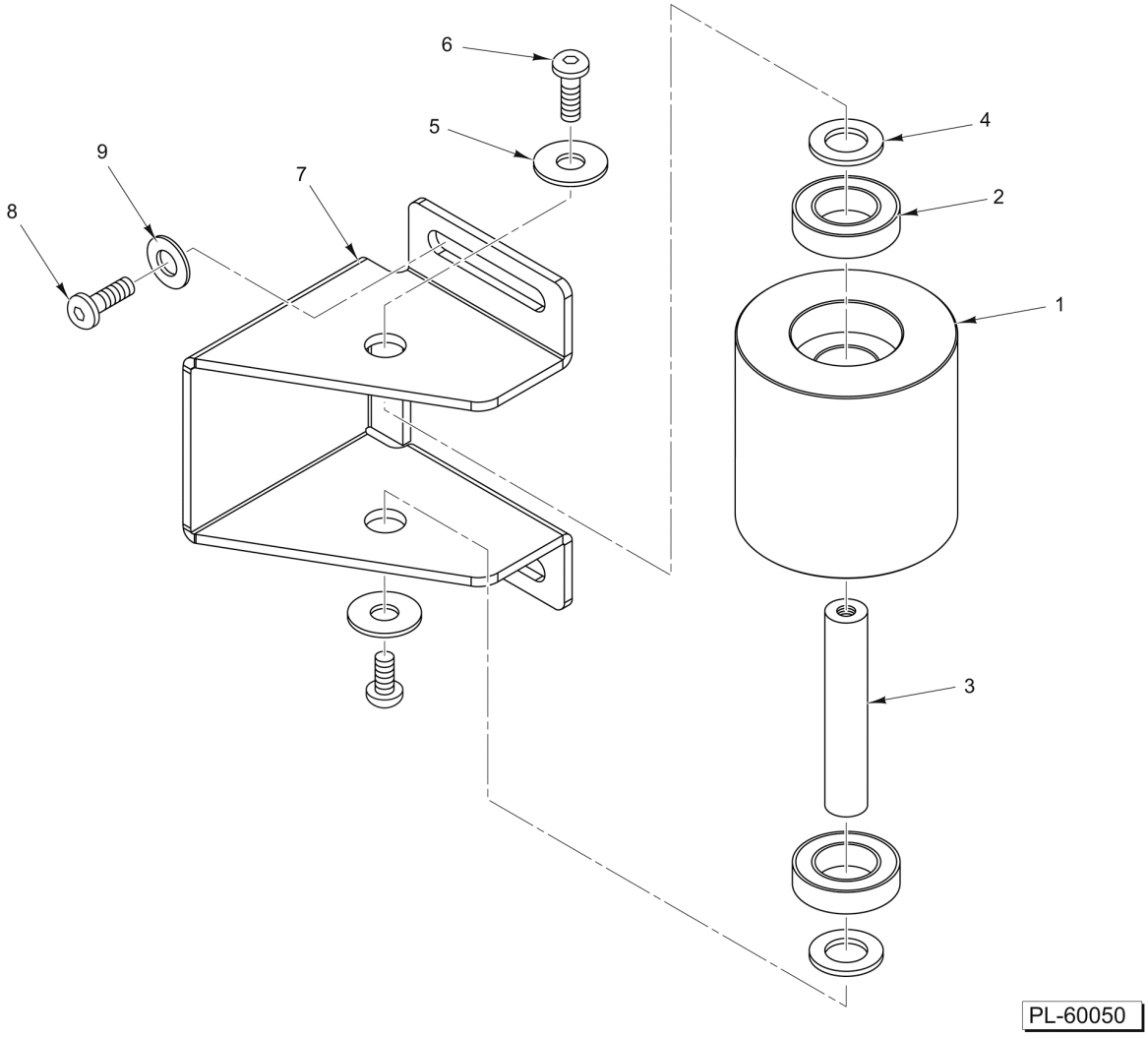

BOWL THRUST BLOCK ROLLER

BOWL THRUST BLOCK ROLLER

ILLUS. PL-60050	PART NO.	NAME OF PART	AMT.
1	00-917671-00177	Roller	1
2	00-917671-00176	Bearing	2
3	00-917671-00191	Pin	1
4		Washer	2
5		Washer	2
6		Screw M6 x 12 Hex Button Hd	2
7	00-917671-00190	Support	1
8		Screw M8 x 16 Hex Button Hd	2
9		Washer	2

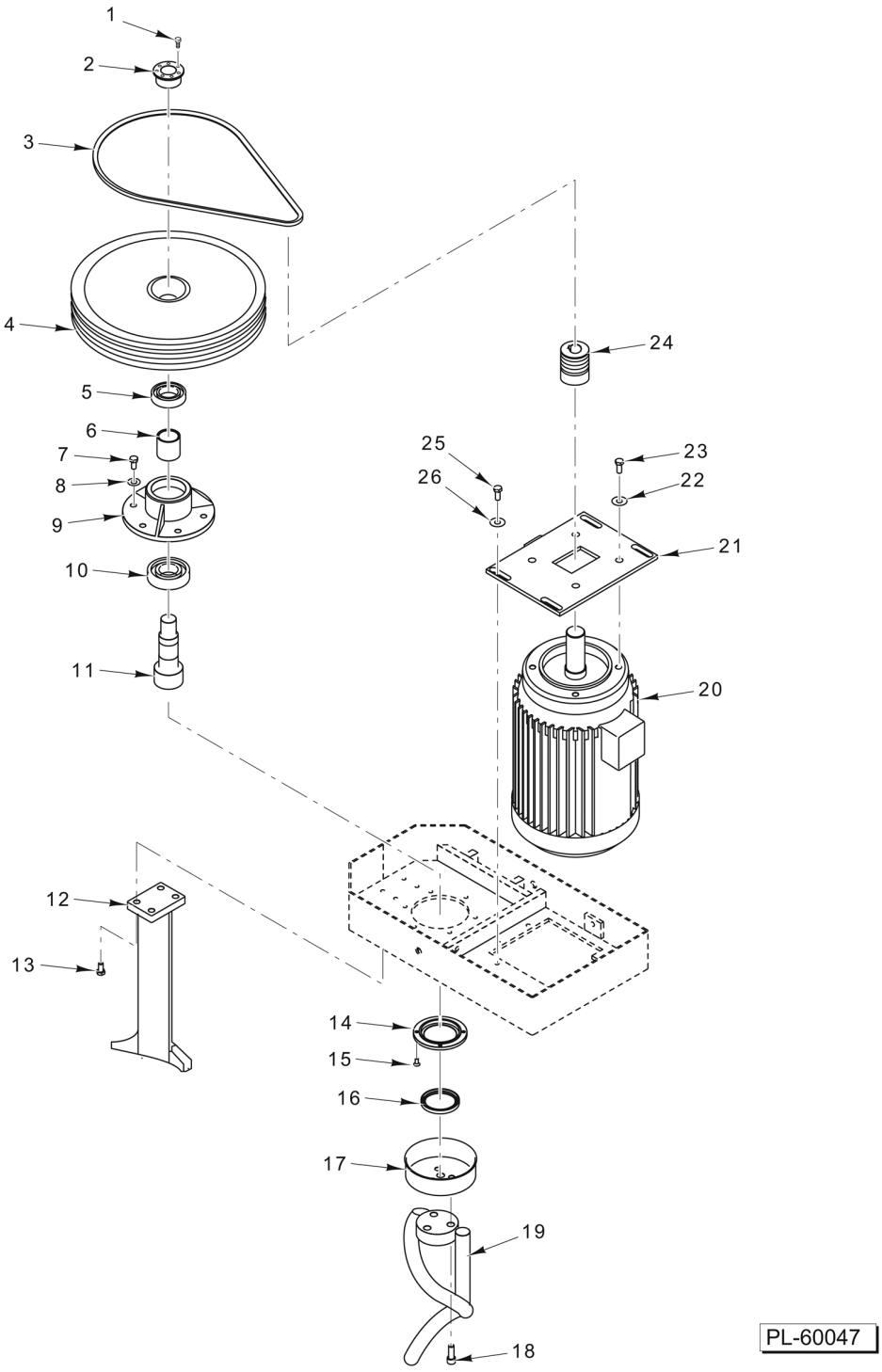

MIXER MOTOR AND COMPONENTS

MIXER MOTOR AND COMPONENTS

ILLUS. PL-60047	PART NO.	NAME OF PART	AMT.
1		Screw M8 x 30 Hex Socket Hd	7
2	00-917671-00135	Lock - Taper	1
3	00-917671-00037	Belt - XPZ 1800	8
4	00-917671-00171	Pulley - Spiral	1
5	00-917671-00019	Bearing - 3212	1
6	00-917671-00136	Spacer - Shaft	1
7		Screw M12 x 30 Hex Hd	6
8		Washer	6
9	00-917671-00133	Support - Spiral	1
10	00-917671-00033	Bearing - 6212	1
11	00-917671-00169	Shaft - Spiral	1
12	00-917671-00138	Column	1
13		Screw M12 x 40 Hex Hd	4
14	00-917671-00154	Support - Top Cover Spiral	1
15		Screw	4
16	00-917671-00204	Ring - Retaining	1
17	00-971671-00155	Sump - Spiral	1
18		Screw M16 x 60 Hex Hd	3
19	00-917671-00153	Tool - Spiral Mixing	1
20	00-917671-00223	Motor, 208V	1
21	00-917671-00168	Plate - Motor Support	1
22		Washer	4
23		Screw M10 x 30 Hex Hd	4
24	00-917671-00172	Pulley	1
25		Screw M12 x 35 Hex Hd	4
26		Washer	4

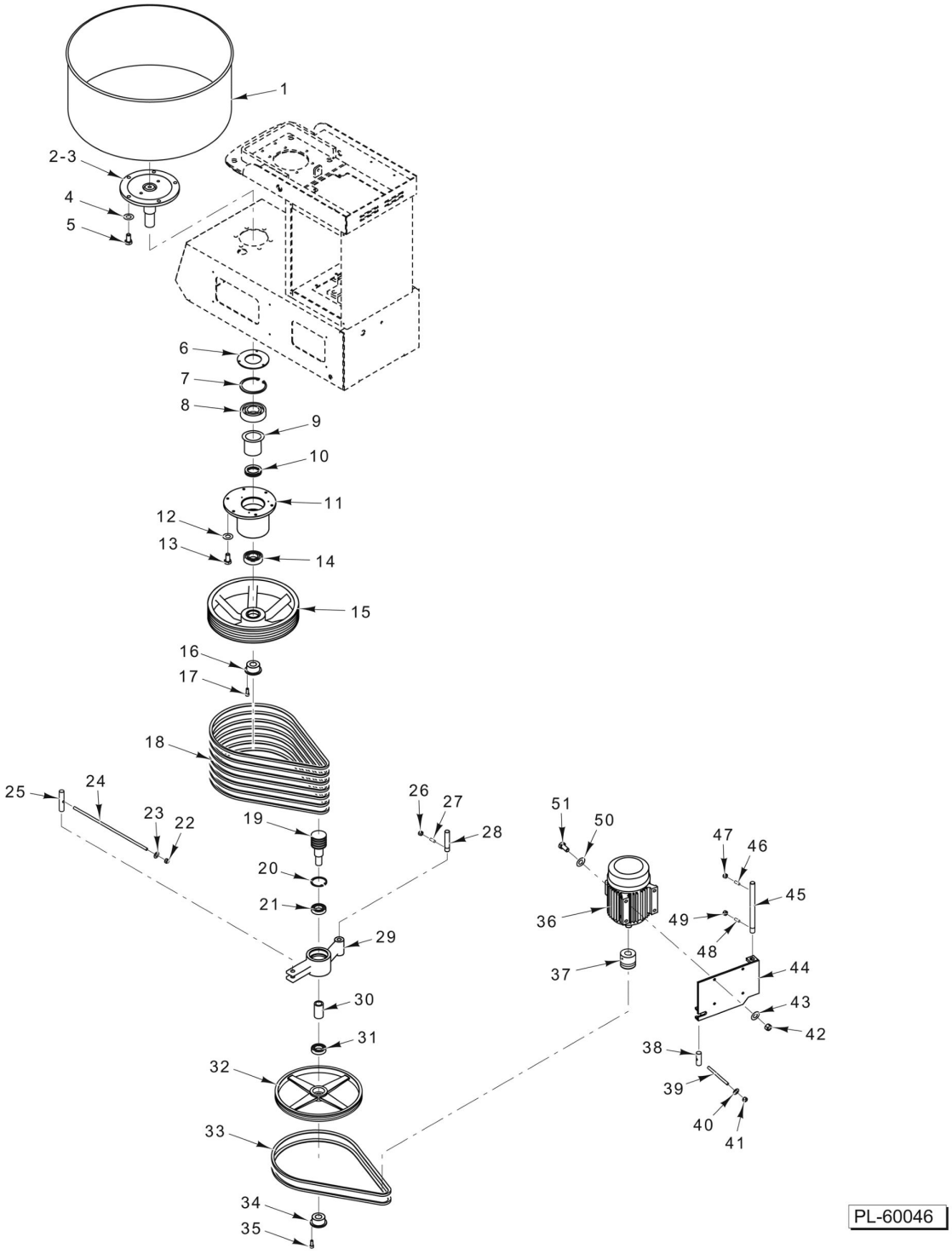

BOWL MOTOR AND COMPONENTS

BOWL MOTOR AND COMPONENTS

ILLUS. PL-60046	PART NO.	NAME OF PART	AMT.
1	00-917671-00164	Bowl (HSU440)	1
2	00-917671-00438	HSL350/HSU440 BOWL SHAFT, W/PIN	1
3	00-917671-00438	HSL350/HSU440 BOWL SHAFT, W/PIN	1
4		Washer	5
5		Screw M12 x 35 Hex Hd	5
6	00-917671-00161	Cover	1
7	00-917671-00199	Ring - Retaining	1
8	00-917671-00030	NLA - Obsolete--Bearing - 3214	1
9	00-917671-00160	Spacer - Bowl Support	1
10	00-917671-00031	NLA - Obsolete--Bearing - 51216	1
11	00-917671-00158	Support - Bowl	1
12		Washer	6
13		Screw M12 x 30 Hex Hd	6
14	00-917671-00032	NLA - Obsolete--Bearing - 6214 2RS	1
15	00-917671-00163	Pulley - Rotating Bowl	1
16	00-917671-00200	Lock - Taper	1
17		Screw M8 x 30 Hex Socket Hd	6
18	00-917671-00037	Belt - XPZ 1800	7
19	00-917671-00170	Shaft - Counter	1
20	00-917671-00173	Seeger Ring	1
21	00-917671-00034	NLA - Obsolete--Bearing - 6309 2RS	1
22		Acorn Nut	1
23		Washer	1
24		Rod - Tie	1
25	00-917671-00050	Pin - Transmission Support	1
26		Nut	1
27		Set Screw M8 x 25	1
28	00-917671-00084	Pin - Transmission Support	1
29	00-917671-00165	Support - Bowl Double Pulley	1
30	00-917671-00166	Spacer - Countershaft	1
31	00-917671-00034	NLA - Obsolete--Bearing - 6309 2RS	1
32	00-917671-00167	Pulley - Transmission	1
33	00-917671-00038	NLA - Obsolete--Belt - XPZ 1900	2
34	00-917671-00074	Lock - Taper	1
35		Screw M6 x 25 Hex Socket Hd	8
36	00-917671-00175	Motor	1
37	00-917671-00162	Pulley	1
38	00-917671-00050	Pin - Transmission Support	2
39	00-917671-00202	Rod - Tie	1
40		Washer	1
41		Acorn Nut	1
42		Nut	4
43		Washer	4
44	00-917671-00157	Support - Motor Bowl	1
45	00-917671-00156	Pin - Motor Plate	1
46		Set Screw	2
47		Nut	2
48		Set Screw M8 x 30	1
49		Nut	1
50		Washer	4
51		Screw Hex Hd	4

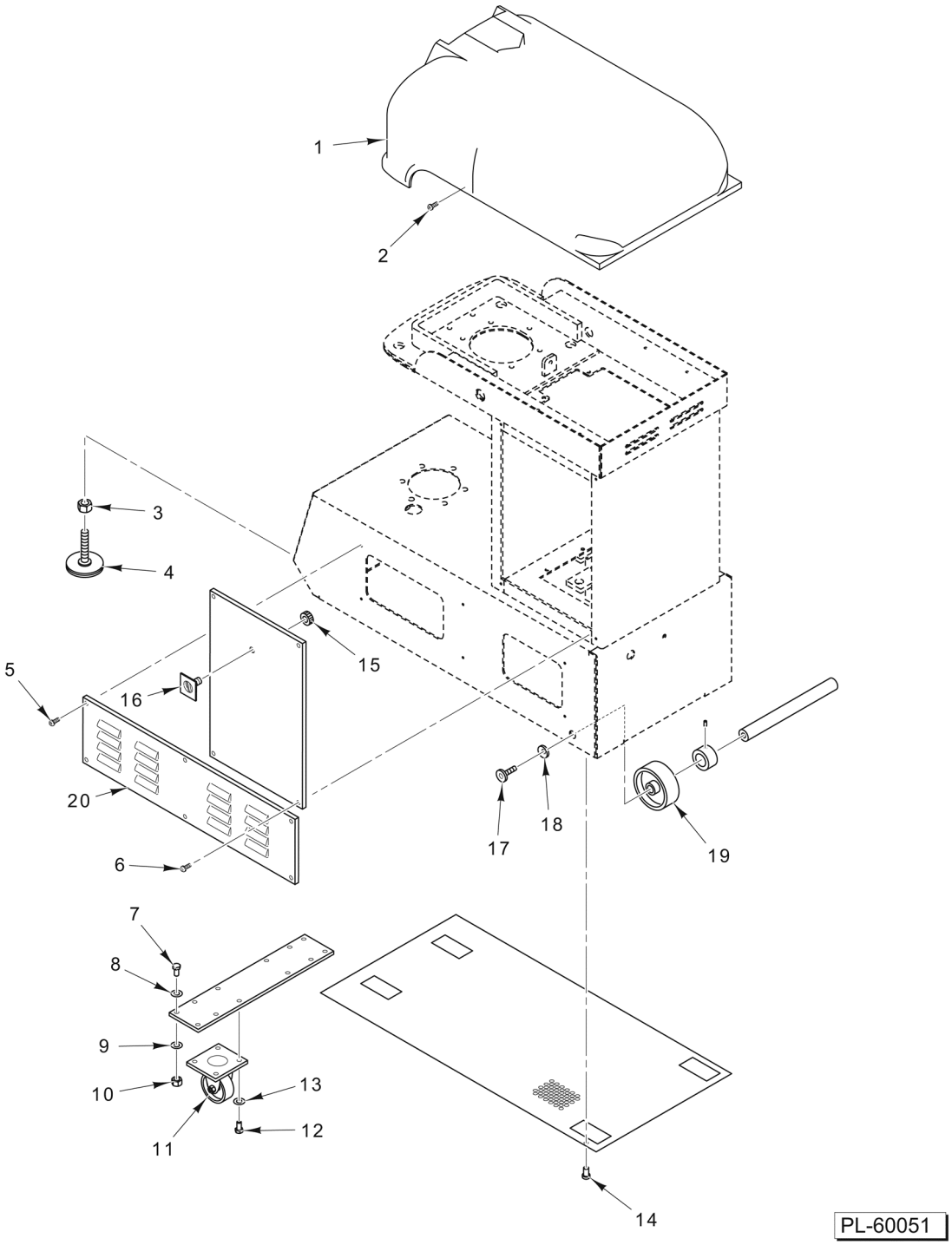

PANELS AND COVERS

PANELS AND COVERS

ILLUS. PL-60051	PART NO.	NAME OF PART	AMT.
1	00-917671-00152	Cover - Top	1
2		Screw M5 x 20 Hex Button Hd	2
3		Nut	2
4	00-917671-00118	Foot (Adjusting)	2
5		Screw M6 x 25 Hex Button Hd	6
6		Screw M6 x 25 Hex Button Hd	4
7		Screw M8 x 35 Hex Hd	4
8		Washer	4
9		Washer	4
10		Nut	4
11	00-917671-00119	Caster - Front	2
12		Screw M8 x 17 Hex Hd	8
13		Washer	8
14		Screw M5 x 12 Hex Button Hd	18
15		Lock Nut	1
16	00-917671-00090	Actuator - Main Power	1
17		Screw Flat Socket Hd	2
18		Washer	2
19	00-917671-00120	Wheel	2
20		Panel	1

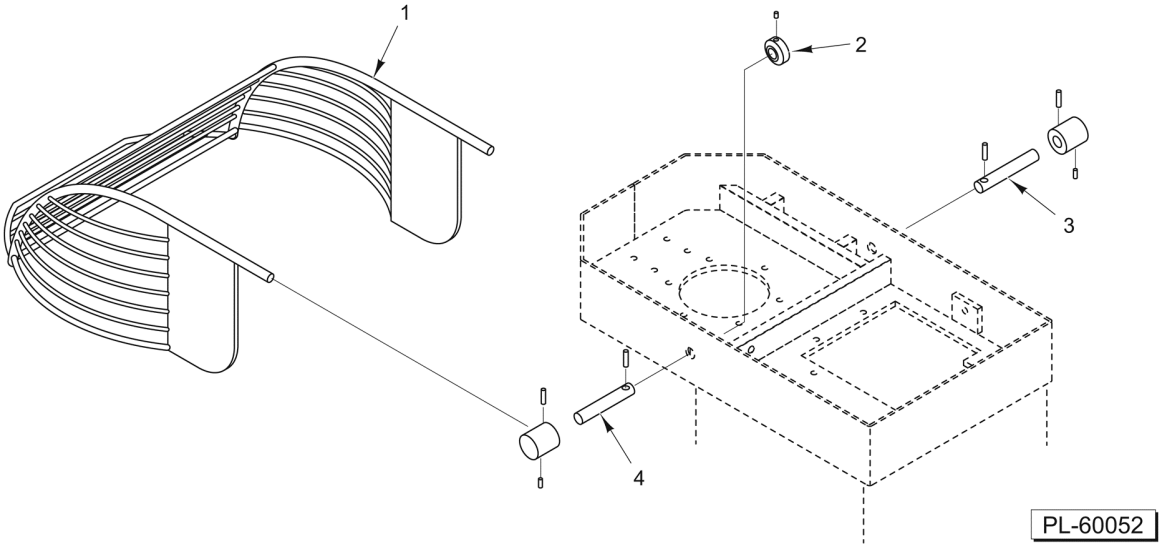

BOWL GUARD

BOWL GUARD

ILLUS. PL-60052	PART NO.	NAME OF PART	AMT.
1	00-917671-00193	Guard - Bowl	1
2	00-917671-00124	Cam Control	1
3	00-917671-00192	Shaft - Rotating Protection	1
4	00-917671-00195	Shaft - Rotating Protection	1