CATALOG OF REPLACEMENT PARTS



HSL130 SPIRAL MIXER

ML-141241 **HSL130**

A product of HOBART 701 S. RIDGE AVENUE TROY, OHIO 45374-0001

FORM 43415 (January 2024)

 © HOBART 2024

Table of Contents

5 PANELS
7 BOWL COVER
9 SPIRAL TRANSMISSION
11 BOWL TRANSMISSION
13 THRUST ROLLER
15 ELECTRICAL COMPONENTS

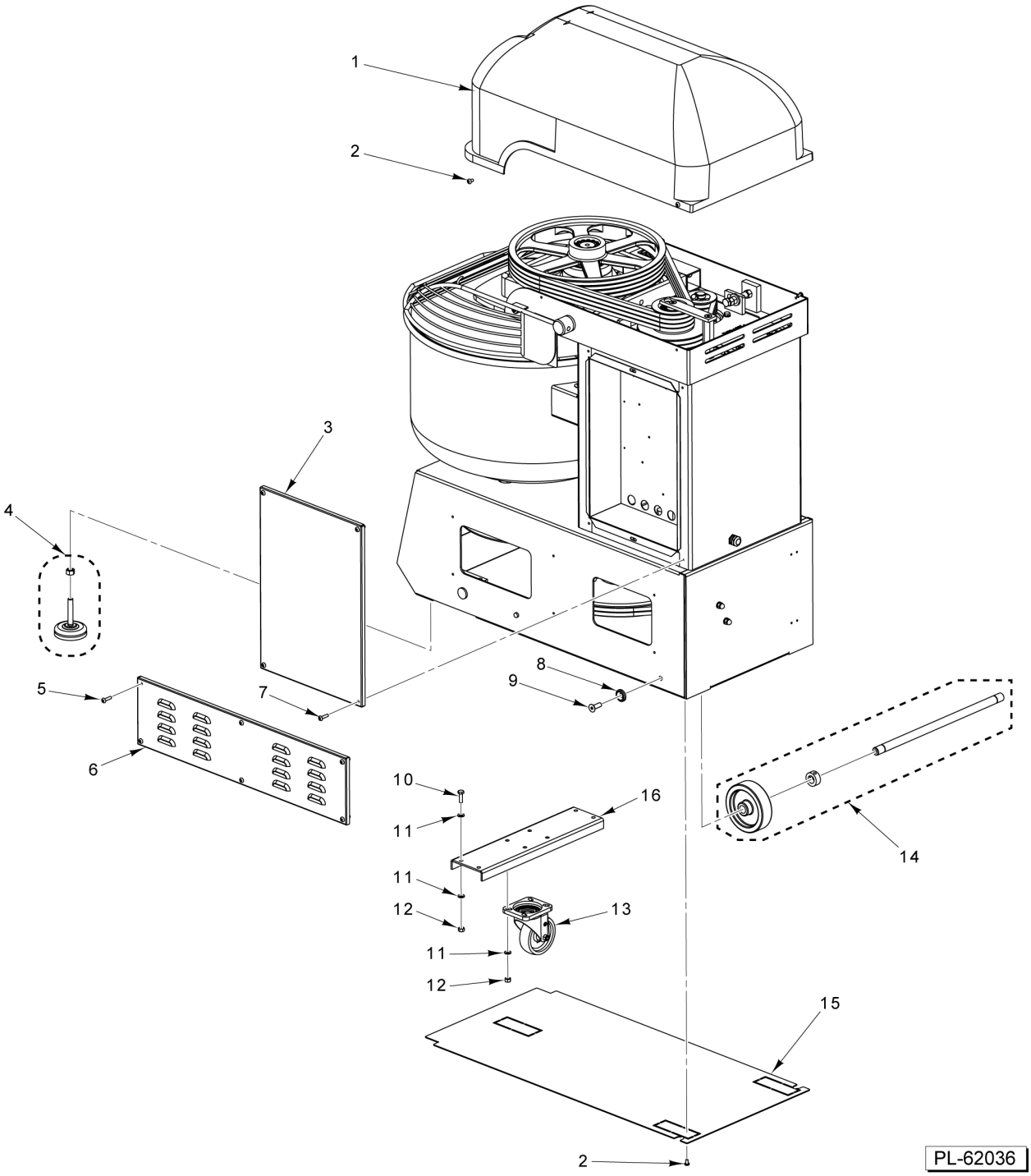

PANELS

PANELS

ILLUS. PL-62036	PART NO.	NAME OF PART	AMT.
1	00-917671-00244	Cover - Top	1
2	00-917671-00411	Screw	AR
3	00-917671-00245	Cover - Electrical Components	1
4	01-650053	Foot Assy	2
5		Screw	6
6	00-917671-00246	Panel - Side	1
7	00-917671-00414	Screw	4
8	00-917671-00237	Washer	2
9	00-917671-00415	Screw	2
10	00-917671-00416	Screw	4
11	00-917671-00417	Washer	8
12	00-917671-00418	Nut	4
13	00-917671-00119	Caster - Front	1
14	00-917671-00120	Wheel and Rod Assy	2
15	00-917671-00247	Panel - Bottom	1
16		Bracket - Caster	1

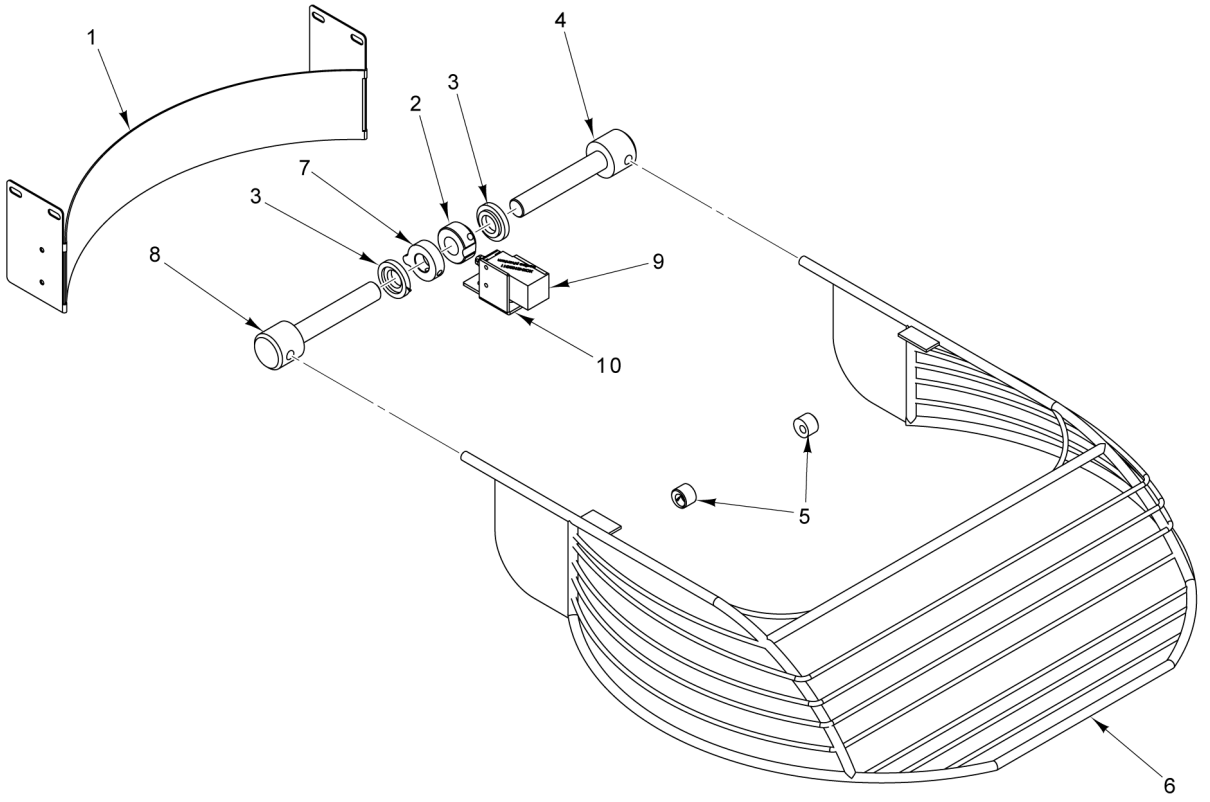

BOWL COVER

BOWL COVER

ILLUS. PL-62037	PART NO.	NAME OF PART	AMT.
1	00-917671-00248	Cover - Bowl	1
2	00-917671-00249	Cam	1
3	00-917671-00350	Bushing	2
4	00-917671-00351	Pin	1
5	00-917671-00352	Eccentric	2
6	00-917671-00353	Cover - Bowl	1
7	00-917671-00354	Cam	1
8	00-917671-00355	Pin	1
9	00-917671-00112	Switch - Interlock	1
10	00-917671-00420	Bracket - Switch	1

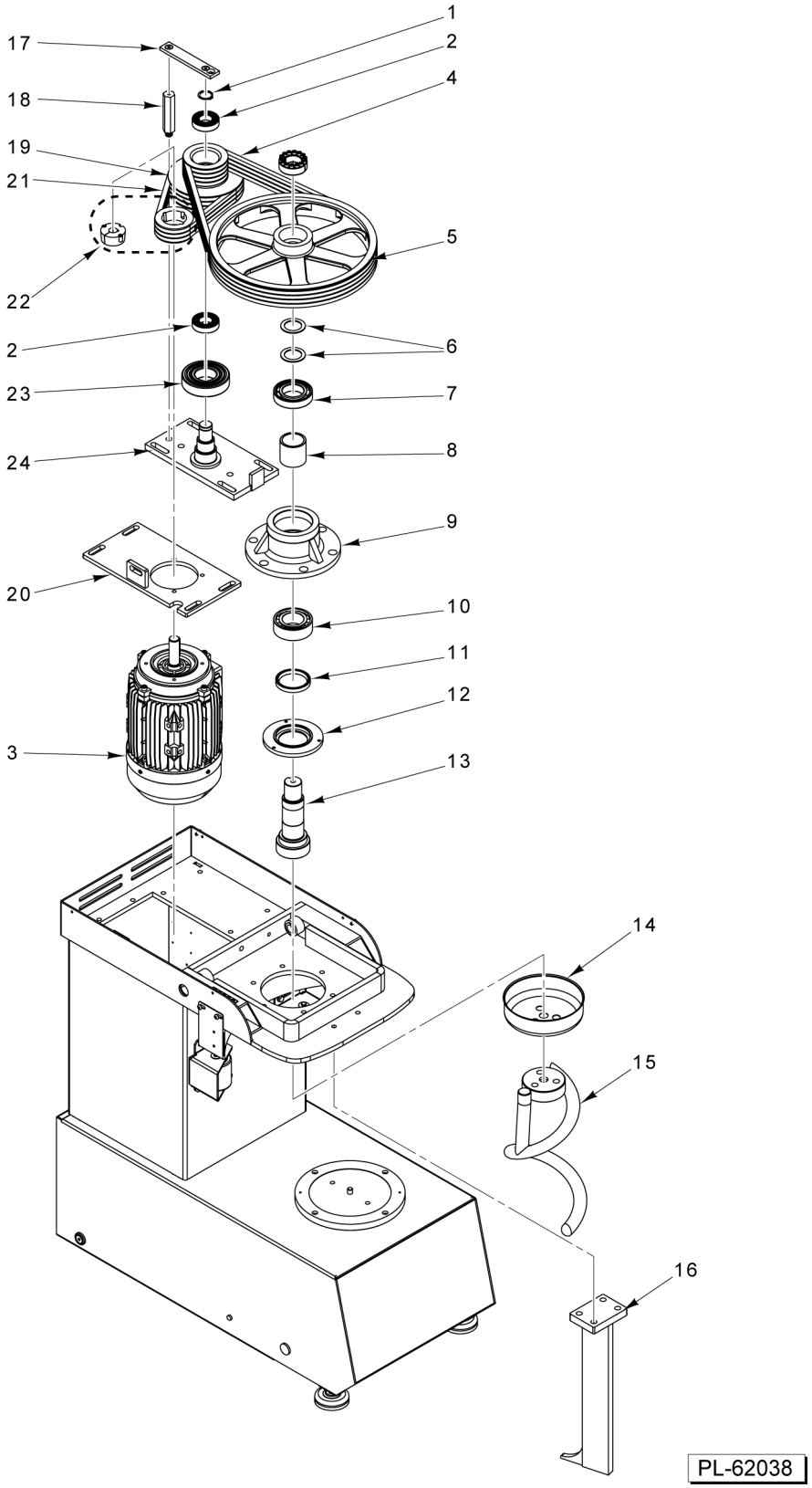

SPIRAL TRANSMISSION

SPIRAL TRANSMISSION

ILLUS. PL-62038	PART NO.	NAME OF PART	AMT.
1	00-917671-00210	Ring	1
2	00-917671-00001	Bearing - 6206 LLU/5K	2
3	00-917671-00377	Motor	1
4	00-917671-00357	Belt	4
5	01-650051	Pulley - Spiral (Incls. Taper Lock)	1
6	00-917671-00359	Spacer	2
7	00-917671-00003	Bearing	1
8	00-917671-00360	Spacer	1
9	00-917671-00361	Support	1
10	00-917671-00007	Bearing	1
11	00-917671-00362	Ring	1
12	00-917671-00363	Cover - Support	1
13	00-917671-00364	Shaft	1
14	00-917671-00365	Sump	1
15	00-917671-00366	Spiral	1
16	00-917671-00367	Column	1
17	00-917671-00368	Plate	1
18	00-917671-00369	Column	1
19	00-917671-00370	Pulley - Double	1
20	00-917671-00376	Support - Motor	1
21	00-917671-00372	Belt	1
22	01-650052	Pulley - Motor (Incls. Bushing)	1
23	00-917671-00374	Bearing	1
24	00-917671-00375	Support - Double Pulley	1

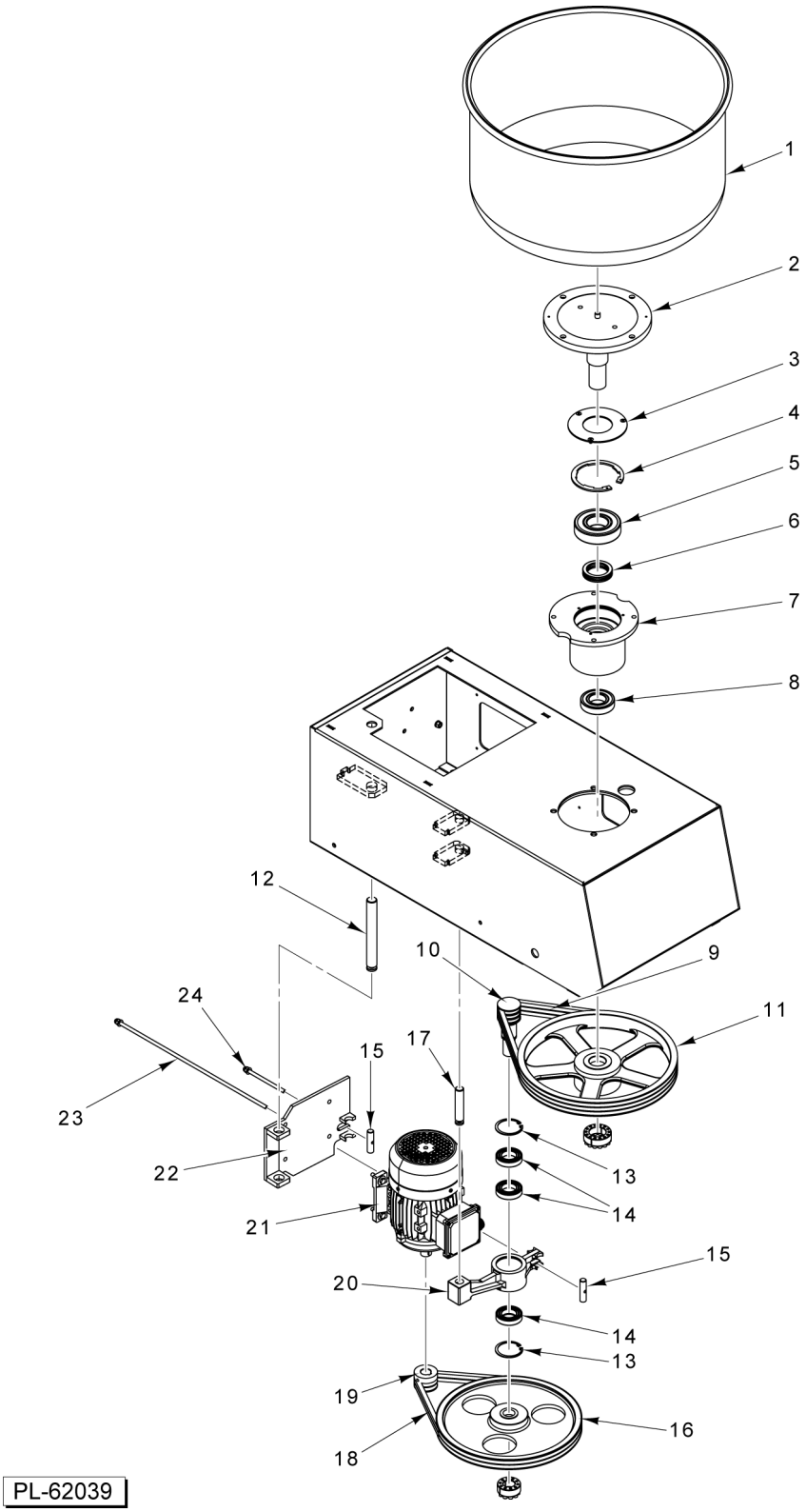

BOWL TRANSMISSION

BOWL TRANSMISSION

ILLUS. PL-62039	PART NO.	NAME OF PART	AMT.
1	00-917671-00378	Bowl	1
2	00-917671-00379	Shaft - Bowl	1
3	00-917671-00380	Flange - Bowl Support	1
4	00-917671-00381	Ring	1
5	00-917671-00002	Bearing	1
6	00-917671-00006	Bearing	1
7	00-917671-00382	Support - Bowl	1
8	00-917671-00004	Bearing - 6208 2RS	1
9	00-917671-00383	Belt	3
10	00-917671-00384	Shaft	1
11	01-650049	Pulley - Bowl (Incls. Taper - Lock)	1
12		Pin	1
13	00-917671-00386	Ring	2
14	00-917671-00005	Bearing	3
15	00-917671-00387	Pin	2
16	01-650050	Pulley (Incls. Taper - Lock)	1
17	00-917671-00397	Pin	1
18	00-917671-00390	Belt	2
19	00-917671-00391	Pulley - Bowl Motor	1
20	00-917671-00392	Support - Pulley	1
21	00-917671-00393	Motor - Bowl	1
22	00-917671-00394	Support - Bowl Motor	1
23	00-917671-00395	Rod - Tie	1
24	00-917671-00396	Rod - Tie	1

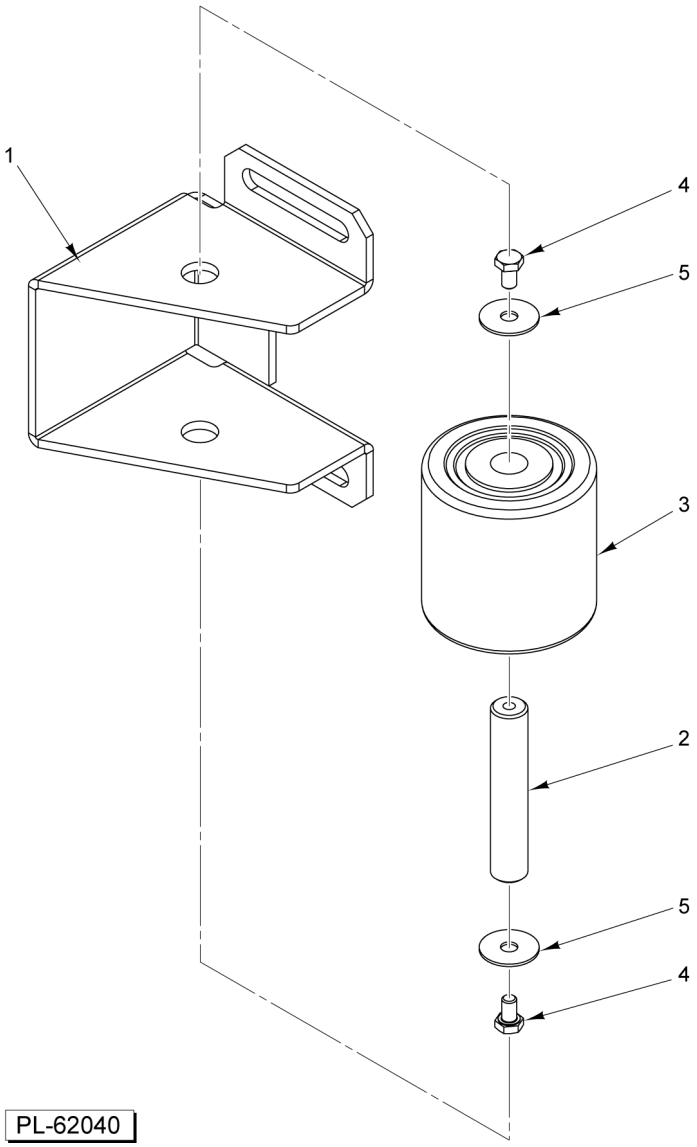

THRUST ROLLER

THRUST ROLLER

ILLUS. PL-62040	PART NO.	NAME OF PART	AMT.
1	00-917671-00398	Support - Thrust Roller	1
2	00-917671-00399	Pin	2
3	00-917671-00014	Roller - Thrust	1
4	00-917671-00178	Screw	2
5	00-917671-00179	Washer	2

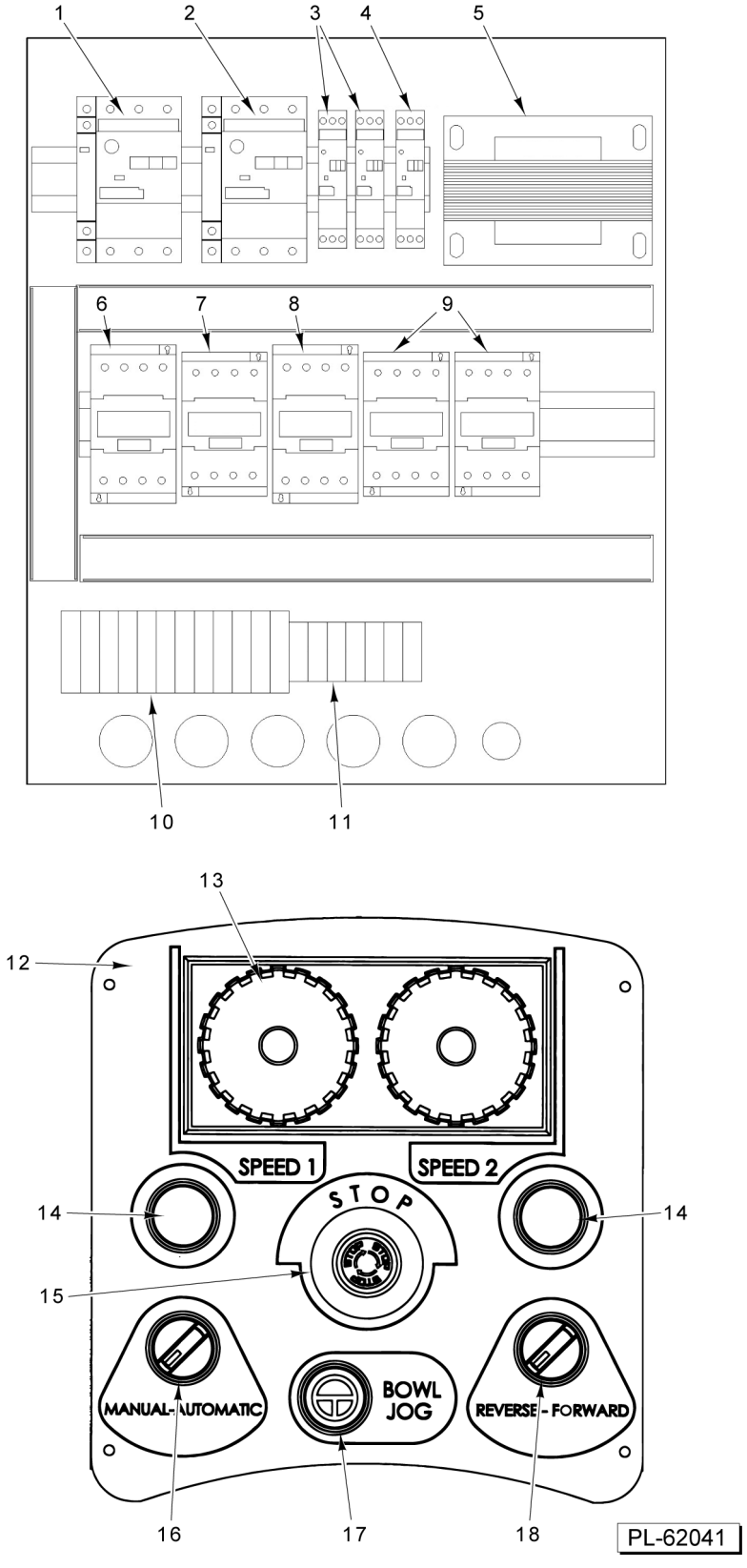

ELECTRICAL COMPONENTS

ELECTRICAL COMPONENTS

ILLUS. PL-62041	PART NO.	NAME OF PART	AMT.
1	01-650041	Circuit Breaker (Motor)	1
2	01-650042	Circuit Breaker (Motor)	1
3	00-917671-00092	Breaker - Circuit Therm. Magn	2
4	00-917671-00093	Breaker - Circuit Therm. Magn	1
5	00-917671-00088	Transformer	1
6	01-650043	Contactor (18 Amp.) (480 VAC)	1
7	00-917671-00188	Contactor (12 Amp.) (480 VAC)	1
8	00-917671-00425	Contactor (18 Amp.) (480 VAC)	1
9	00-917671-00427	Block - Contact	2
10	00-917671-00428	Block - Terminal	14
11	00-917671-00429	Block - Terminal	5
12	00-917671-00242	Overlay	1
13	00-917671-00243	Timer - Digital Double	1
14	01-650045	Button (White)	2
15	01-650044	Contact - Stop Button	1
16	01-650047	Switch - Head Selector (2-Position)	1
17	01-650046	Button	1
18	01-650048	Switch - Head Selector	1