CATALOG OF REPLACEMENT PARTS



HSL SPIRAL MIXERS

ML-134446	HSL180
ML-134447	HSL220
ML-134448	HSL300
ML-141073	HSL350

A product of HOBART 701 S. RIDGE AVENUE TROY, OHIO 45374-0001

FORM 43175 Rev. B (March 2025)

 © HOBART 2025

Table of Contents

5 CONTROLS
7 ELECTRICAL COMPONENTS
9 BOWL THRUST BLOCK ROLLER
11 MIXER MOTOR AND COMPONENTS (HSL180, HSL220, AND HSL300)
13 MIXER MOTOR AND COMPONENTS (HSL350)
15 BOWL MOTOR AND COMPONENTS (HSL180, HSL220, AND HSL300)
17 BOWL MOTOR AND COMPONENTS (HSL350)
19 PANELS AND COVERS
21 BOWL GUARD

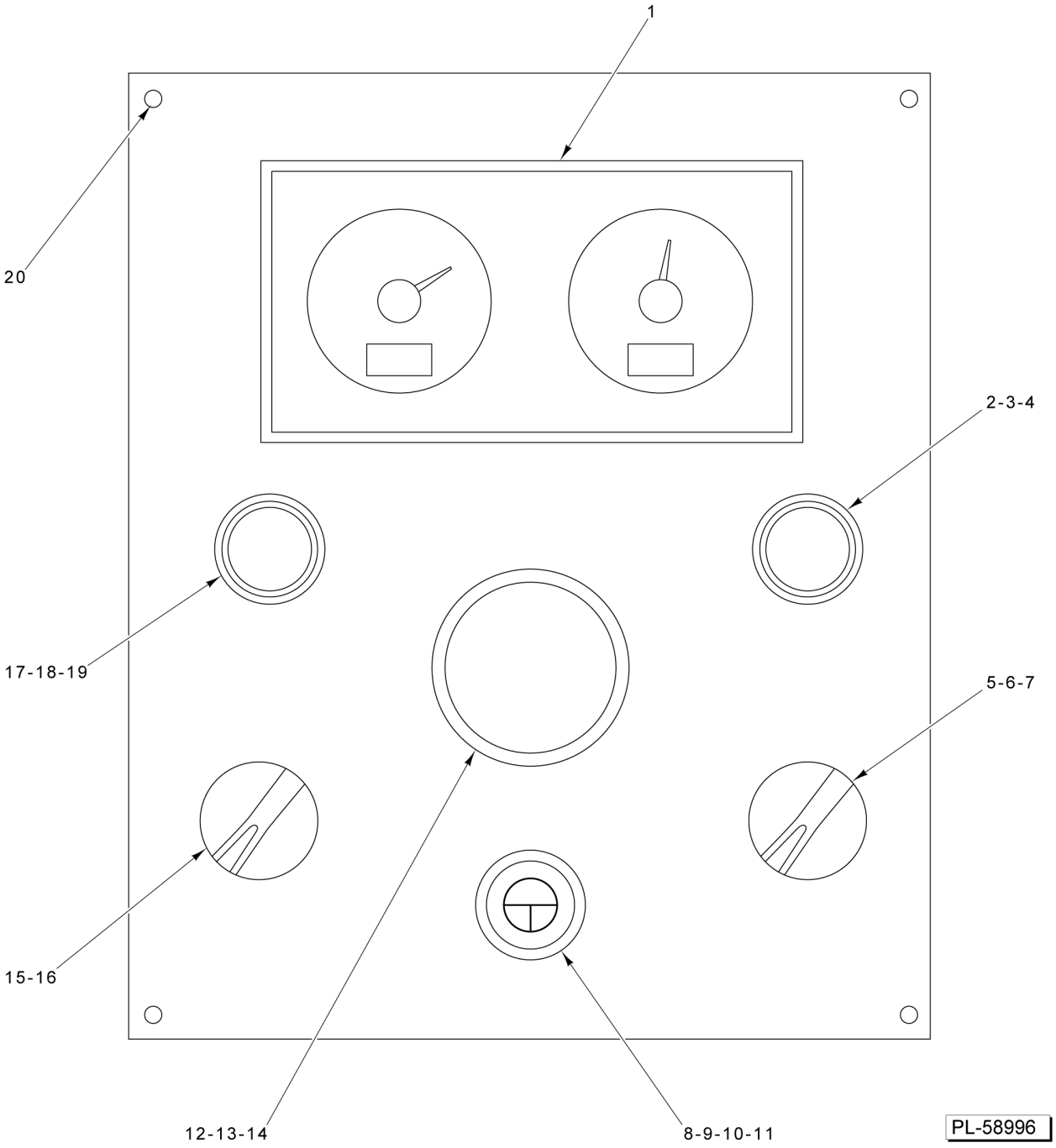

CONTROLS

CONTROLS

ILLUS. PL-58996	PART NO.	NAME OF PART	AMT.
1	00-917671-00243	Timer - Digital Double	1
2	00-917671-00108	Switch (Start 2)	1
3	00-917671-00104	Contact	1
4	00-917671-00109	Lamp - LED	1
5	00-917671-00102	Switch - Head Selector (2-Position)	1
6	00-917671-00104	Contact	1
7	00-917671-00105	Contact	3
8	00-917671-00110	Button - Impulse Tank	1
9	00-917671-00104	Contact	1
10	00-917671-00111	Button - Plate With Inscription (HSL180, HSL220, & HSL300)	1
11	00-917671-00220	Button (HSL350)	1
12	00-917671-00106	Contact - Stop Button	1
13	00-917671-00103	Contact	1
14	00-917671-00107	Contact	1
15	00-917671-00102	Switch - Head Selector (2-Position)	1
16	00-917671-00103	Contact	1
17	00-917671-00108	Switch (Start 1)	1
18	00-917671-00104	Contact	1
19	00-917671-00109	Lamp - LED	1
20		Screw M3.9 x 16 Hex Button Hd	4

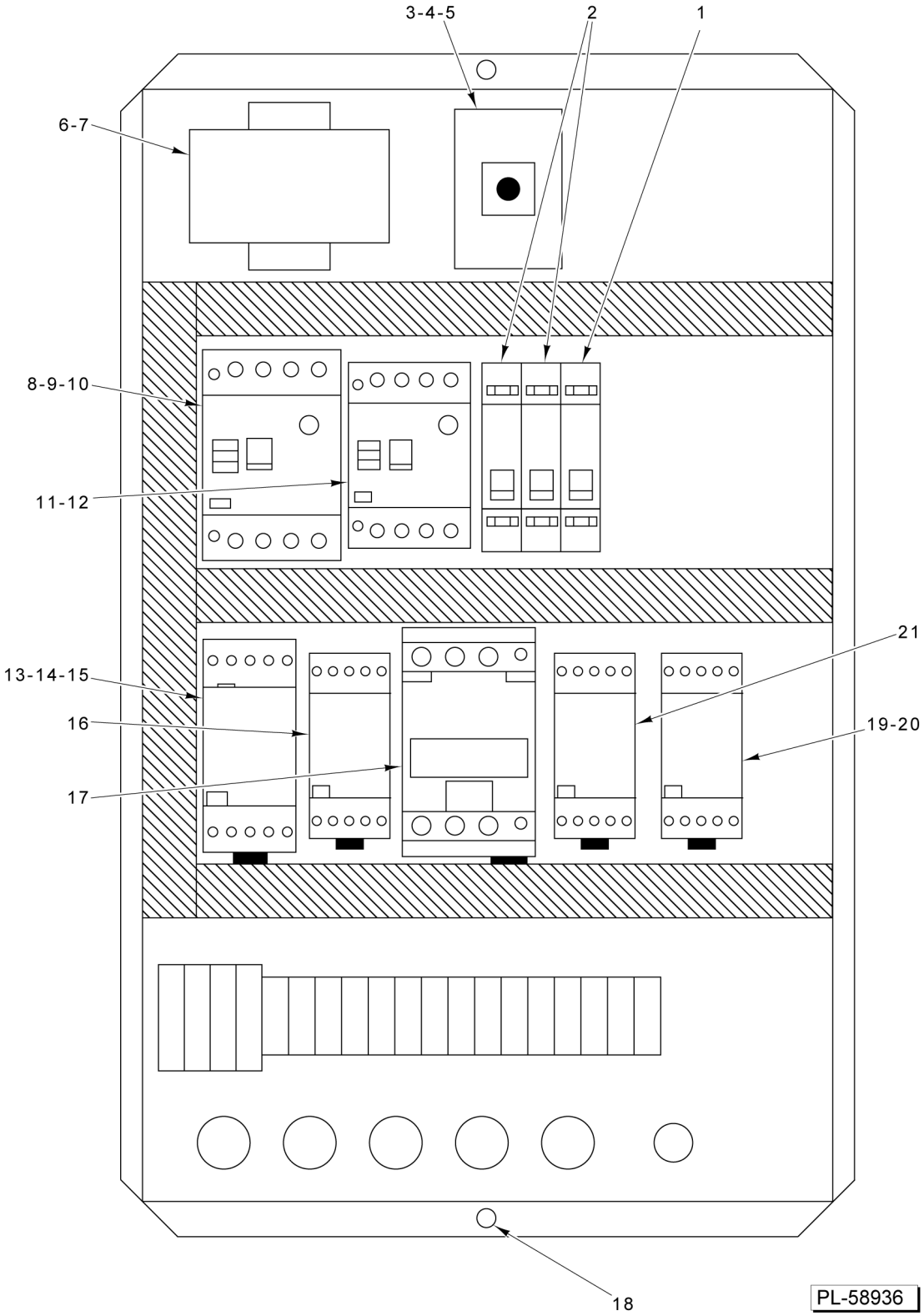

ELECTRICAL COMPONENTS

ELECTRICAL COMPONENTS

ILLUS. PL-58936	PART NO.	NAME OF PART	AMT.
1	00-917671-00093	Breaker - Circuit Therm. Magn	1
2	00-917671-00092	Breaker - Circuit Therm. Magn	2
3	00-917671-00089	Controller - Manual Motor (HSL180, HSL220, & HSL300)	1
4	00-917671-00091	Shaft - Extensions	1
5	00-917671-00183	Switch - Main (HSL350)	1
6	00-917671-00088	Transformer (HSL180, HSL220, & HSL300)	1
7	00-917671-00184	Transformer (250 VA, 208-230 V., 24A) (HSL350)	1
8	00-917671-00099	Breaker - Circuit Motor (HSL180, HSL220, & HSL300)	1
9	00-917671-00100	Switch - Side Mount Aux	1
10	00-917671-00185	Breaker - Circuit (HSL350)	1
11	00-917671-00101	Breaker - Circuit Motor	1
12	00-917671-00100	Switch - Side Mount Aux	1
13	00-917671-00094	Contactor (HSL180, HSL220, & HSL300)	1
14	00-917671-00095	Block - Inst. Contact	1
15	00-917671-00186	Contactor (HSL350)	1
16	00-917671-00096	Contactor	1
17	00-917671-00094	Contactor	1
18		Screw M6 x 12 Hex Button Hd	2
19	00-917671-00098	Contactor (HSL180, HSL220, & HSL300)	1
20	00-917671-00188	Contactor (HSL350)	1
21	00-917671-00097	Contactor	1

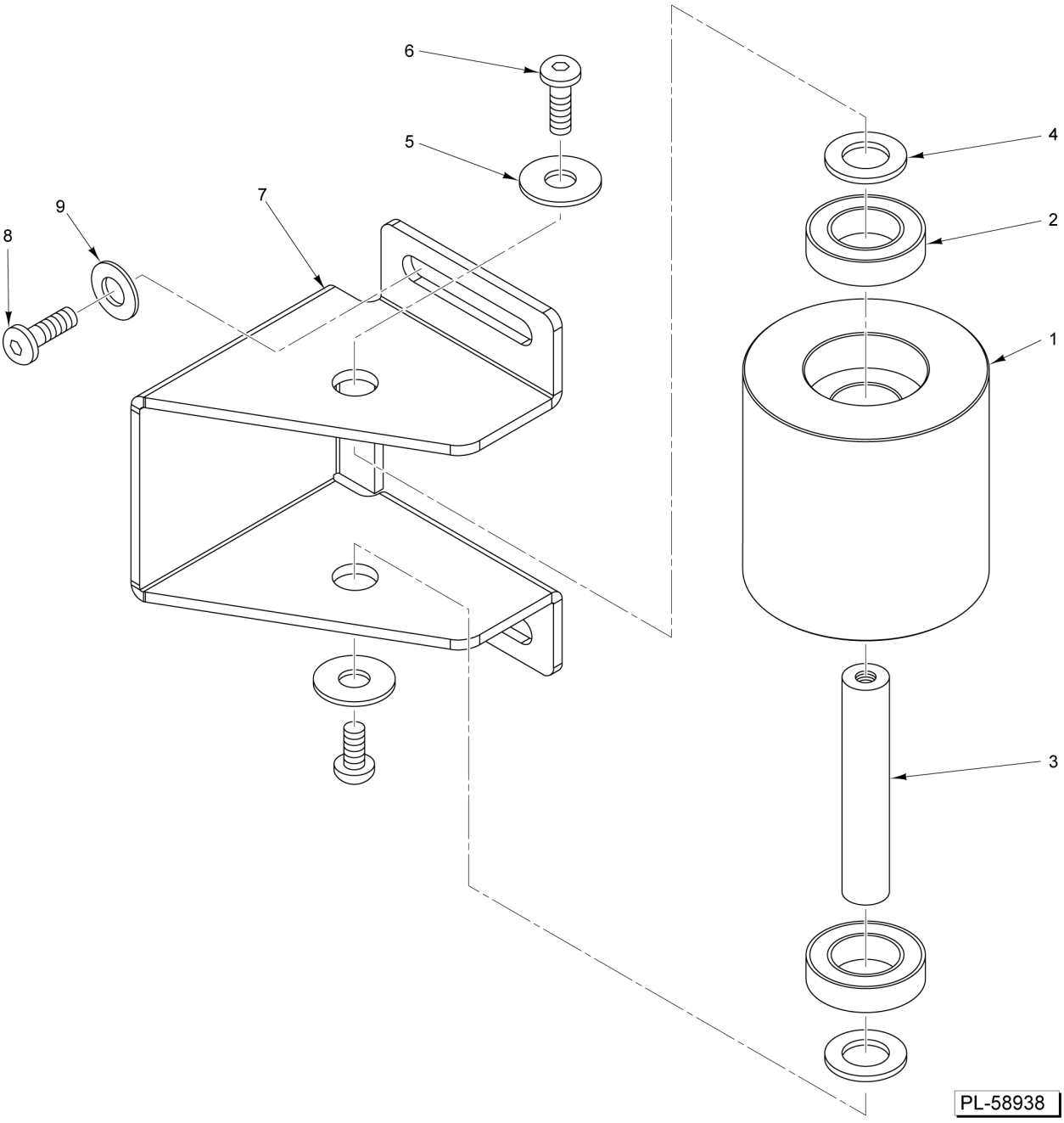

BOWL THRUST BLOCK ROLLER

BOWL THRUST BLOCK ROLLER

ILLUS. PL-58938	PART NO.	NAME OF PART	AMT.
1	00-917671-00061	Roller	1
2	00-917671-00014	Roller - Thrust	2
3	00-917671-00191	Pin	1
4		Washer	2
5		Washer	2
6		Screw M6 x 12 Hex Button Hd	2
7		Support (Right & Left)	1
8		Screw M8 x 16 Hex Button Hd	2
9		Washer	2

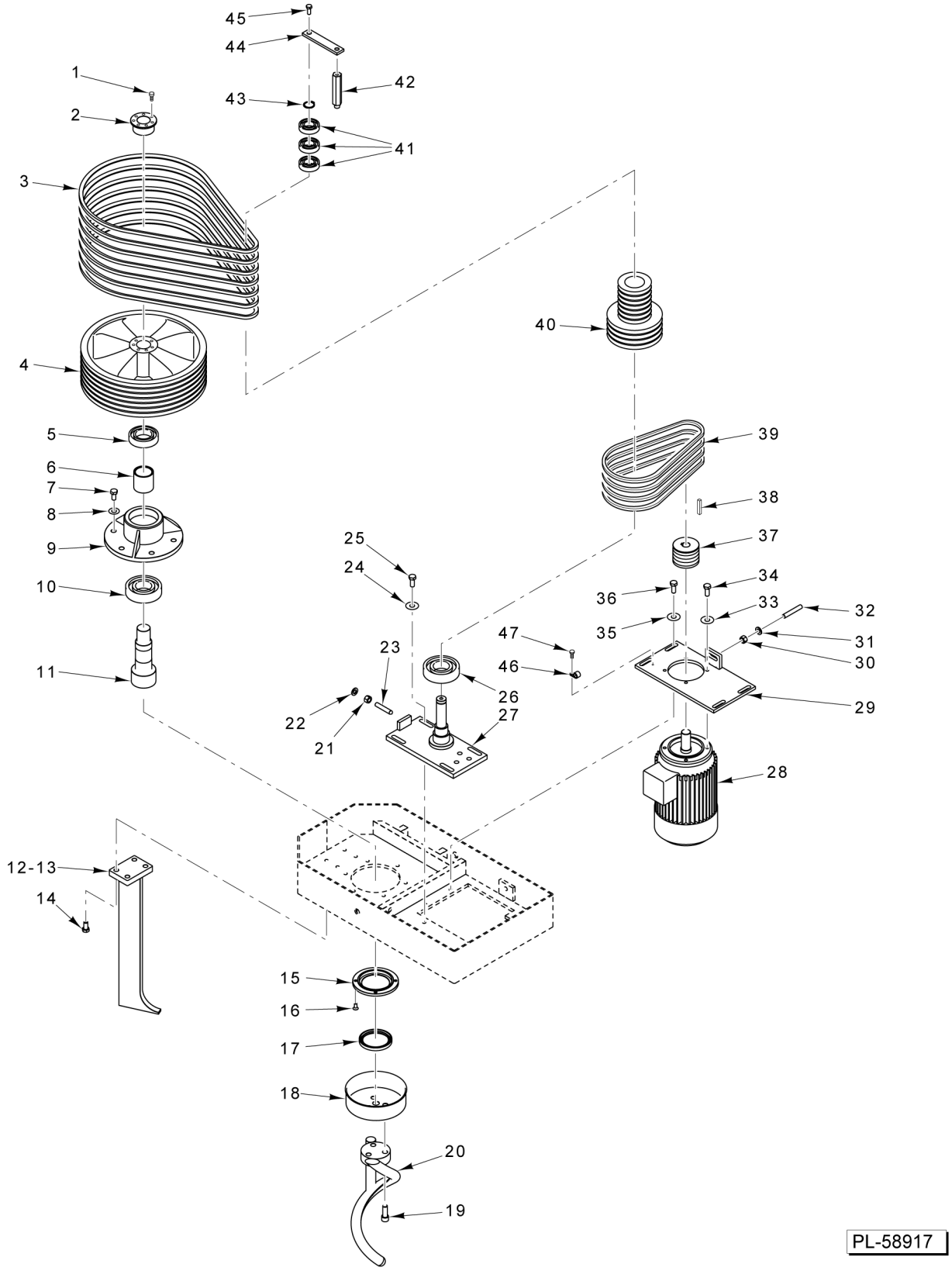

MIXER MOTOR AND COMPONENTS
(HSL180, HSL220, AND HSL300)

MIXER MOTOR AND COMPONENTS (HSL180, HSL220, AND HSL300)

ILLUS. PL-58917A	PART NO.	NAME OF PART	AMT.
1		Screw M8 x 30 Hex Socket Hd	7
2	00-917671-00074	Lock - Taper	1
3	00-917671-00025	Belt - XPZ 1750	7
4	00-917671-00063	Pulley - Rotating Spiral	1
5	00-917671-00022	Bearing - 6011 2RS	1
6	00-917671-00056	Spacer - Shaft	1
7		Screw M12 x 30 Hex Hd	6
8		Washer	6
9	00-917671-00044	Support - Spiral	1
10	00-917671-00021	Bearing - 3211	1
11	00-917671-00062	Shaft - Spiral	1
12	00-917671-00064	Column (HSL180 and HSL220)	1
13	00-917671-00116	Column (HSL300)	1
14		Screw M12 x 40 Hex Hd	4
15	00-917671-00047	Support - Top Cover Spiral	1
16		Screw	4
17	00-917671-00065	Ring - Retaining	1
18	00-917671-00065	Ring - Retaining	1
19		Screw M16 x 60 Hex Hd	3
20	00-917671-00029	Tool - Spiral Mixing (SST)	1
21		Nut (Adjusting)	1
22		Washer	1
23	00-917671-00048	Rod - Tie	1
24		Washer	4
25		Screw M12 x 35 Hex Hd	4
26	00-917671-00016	Bearing - 6313 LLU/5K	1
27	00-917671-00069	Transmission - On Plate	1
28	00-917671-00072	Motor	1
29	00-917671-00068	Plate - Motor Support	1
30		Nut (Adjusting)	3
31		Washer	2
32	00-917671-00048	Rod - Tie	1
33		Washer	4
34		Screw M10 x 30 Hex Hd	4
35		Washer	4
36		Screw M12 x 35 Hex Hd	4
37	00-917671-00046	Pulley - Motor	1
38		Key	1
39	00-917671-00026	Belt - XPZ 825	4
40	00-917671-00067	Pulley	1
41	00-917671-00001	Bearing - 6206 LLU/5K	3
42	00-917671-00066	Bar	1
43	00-917671-00073	Seeger Ring	1
44	00-917671-00045	Plate - Connection	1
45		Screw M8 x 20 Socket Button Hd	2
46		Clamp	1
47		Screw M5 x 12	1

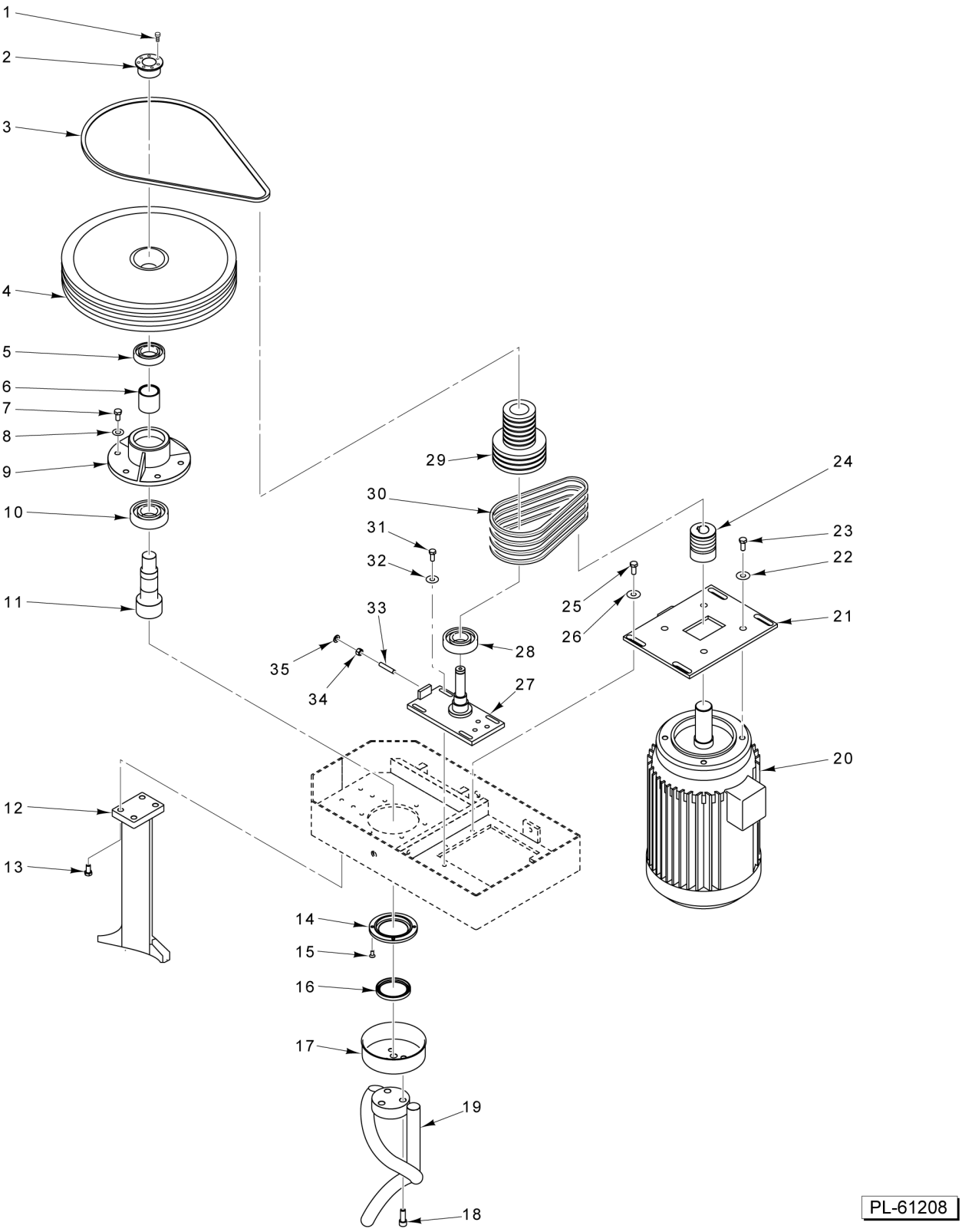

MIXER MOTOR AND COMPONENTS (HSL350)

MIXER MOTOR AND COMPONENTS (HSL350)

ILLUS. PL-61208	PART NO.	NAME OF PART	AMT.
1		Screw M8 x 30 Hex Socket Hd	7
2	00-917671-00135	Lock - Taper	1
3	00-917671-00037	Belt - XPZ 1800	8
4	00-917671-00171	Pulley - Spiral	1
5	00-917671-00019	Bearing - 3212	1
6	00-917671-00136	Spacer - Shaft	1
7		Screw M12 x 30 Hex Hd	6
8		Washer	6
9	00-917671-00133	Support - Spiral	1
10	00-917671-00033	Bearing - 6212	1
11	00-917671-00169	Shaft - Spiral	1
12	00-917671-00138	Column	1
13		Screw M12 x 40 Hex Hd	4
14	00-917671-00154	Support - Top Cover Spiral	1
15		Screw	4
16	00-917671-00204	Ring - Retaining	1
17	00-971671-00155	Sump - Spiral	1
18		Screw M16 x 60 Hex Hd	3
19	00-917671-00153	Tool - Spiral Mixing	1
20	00-917671-00223	Motor, 208V	1
21	00-917671-00168	Plate - Motor Support	1
22		Washer	4
23		Screw M10 x 30 Hex Hd	4
24	00-917671-00214	Pulley	1
25		Screw M12 x 35 Hex Hd	4
26		Washer	4
27	00-917671-00217	Support - Double Pulley	1
28	00-917671-00016	Bearing - 6313 LLU/5K	1
29	00-917671-00215	Pulley - Spiral	1
30	00-917671-00026	Belt - XPZ 825	1
31		Screw M12 x 35 Hex Hd	4
32		Washer	4
33	00-917671-00048	Rod - Tie	1
34		Nut	1
35		Washer	1

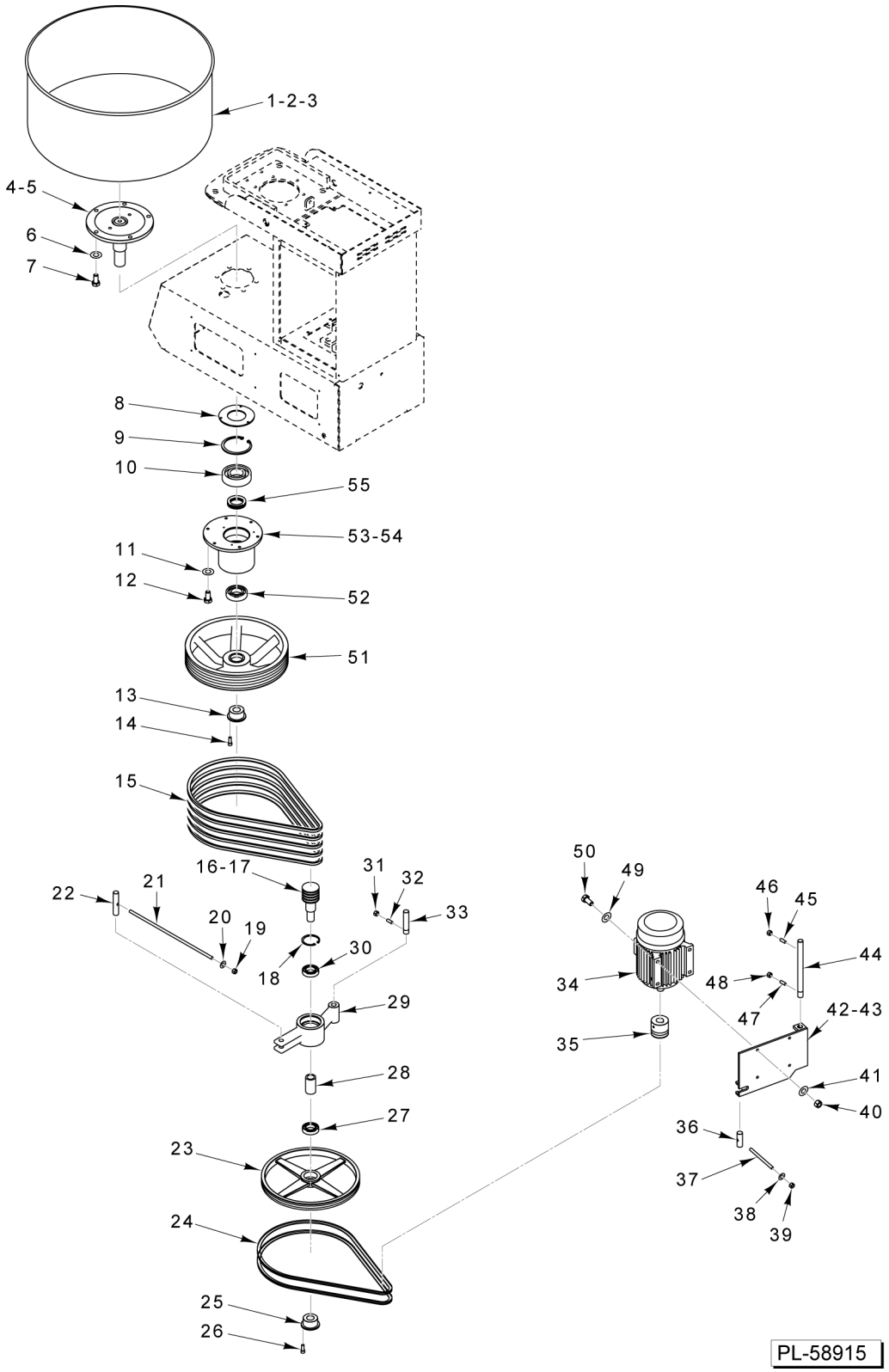

BOWL MOTOR AND COMPONENTS
(HSL180, HSL220, AND HSL300)

BOWL MOTOR AND COMPONENTS (HSL180, HSL220, AND HSL300)

ILLUS. PL-58915	PART NO.	NAME OF PART	AMT.
1	00-917671-00075	Bowl (HSL180)	1
2	00-917671-00115	Bowl (HSL300)	1
3	00-917671-00076	Bowl (HSL220)	1
4	00-917671-00437	HSL180/220/300 BOWL SHAFT, W/PIN	1
5	00-917671-00437	HSL180/220/300 BOWL SHAFT, W/PIN	1
6		Washer	5
7		Screw M12 x 35 Hex Hd	5
8	00-917671-00079	Cover	1
9	00-917671-00078	Seal	1
10	00-917671-00019	Bearing - 3212	1
11		Washer	6
12		Screw M12 x 30 Hex Hd	6
13	00-917671-00074	Lock - Taper	1
14		Screw M8 x 30 Hex Socket Hd	6
15	00-917671-00024	Belt - XPZ 1437	5
16	00-917671-00080	Shaft - Counter (HSL180 & HSL220)	1
17	00-917671-00227	Shaft - Counter (HSL300)	1
18	00-917671-00073	Seeger Ring	1
19		Acorn Nut	1
20		Washer	1
21	00-917671-00087	Rod - Tie	1
22	00-917671-00050	Pin - Transmission Support	1
23	00-917671-00082	Pulley - Transmission	1
24	00-917671-00023	Belt - XPZ 1700	2
25	00-917671-00083	Lock - Taper	1
26		Screw M6 x 25 Hex Socket Hd	8
27	00-917671-00004	Bearing - 6208 2RS	1
28	00-917671-00081	Shaft - Distancing Counter	1
29	00-917671-00043	Support	1
30	00-917671-00004	Bearing - 6208 2RS	1
31		Nut	1
32		Set Screw M8 x 25	1
33	00-917671-00084	Pin - Transmission Support	1
34	00-917671-00059	Motor	1
35	00-917671-00086	Pulley	1
36	00-917671-00050	Pin - Transmission Support	2
37	00-917671-00085	Rod - Tie	1
38		Washer	1
39		Acorn Nut	1
40		Nut	4
41		Washer	4
42	00-917671-00052	Support - Motor Bowl (HSL180 & HSL220)	1
43	00-917671-00198	Support - Motor Bowl (HSL300)	1
44	00-917671-00049	Pin - Motor Plate	1
45		Set Screw	AR
46		Nut	2
47		Set Screw M8 x 30	1
48		Nut	1
49		Washer	4
50		Screw Hex Hd	4
51	00-917671-00051	Pulley - Rotating Bowl	1
52	00-917671-00020	Bearing - 6012 2RS	1
53	00-917671-00055	Support - Bowl	1
54	00-917671-00053	Shaft - Distancing Bowl	1
55	00-917671-00018	Bearing - 51214	1

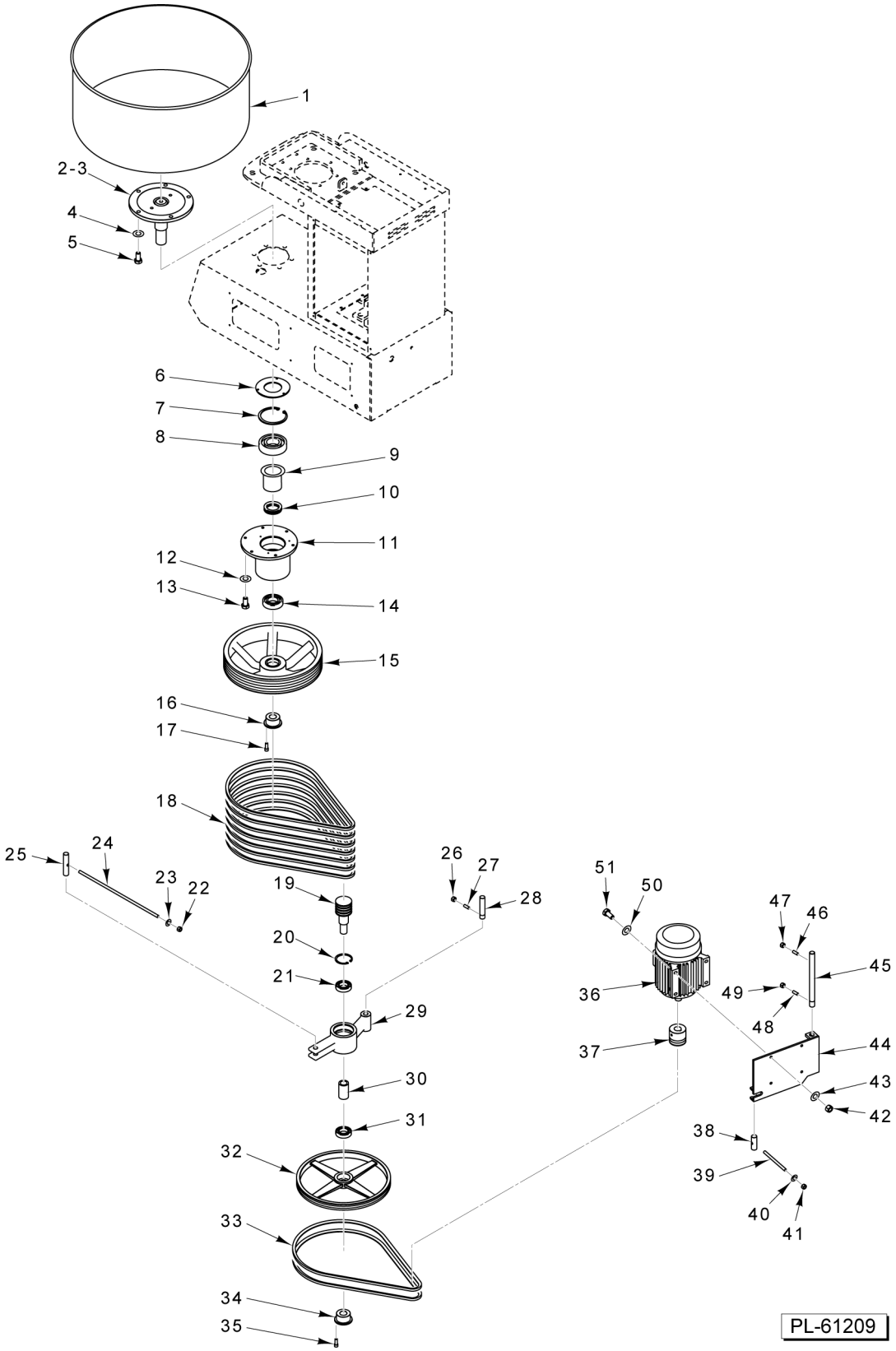

BOWL MOTOR AND COMPONENTS (HSL350)

BOWL MOTOR AND COMPONENTS (HSL350)

ILLUS. PL-61209	PART NO.	NAME OF PART	AMT.
1	00-917671-00211	Bowl (HSL350)	1
2	00-917671-00438	HSL350/HSU440 BOWL SHAFT, W/PIN	1
3	00-917671-00054	Pin - Centering Bowl	1
4		Washer	5
5		Screw M12 x 35 Hex Hd	5
6	00-917671-00161	Cover	1
7	00-917671-00199	Ring - Retaining	1
8	00-917671-00030	NLA - Obsolete--Bearing - 3214	1
9	00-917671-00160	Spacer - Bowl Support	1
10	00-917671-00031	NLA - Obsolete--Bearing - 51216	1
11	00-917671-00158	Support - Bowl	1
12		Washer	6
13		Screw M12 x 30 Hex Hd	6
14	00-917671-00032	NLA - Obsolete--Bearing - 6214 2RS	1
15	00-917671-00163	Pulley - Rotating Bowl	1
16	00-917671-00200	Lock - Taper	1
17		Screw M8 x 30 Hex Socket Hd	6
18	00-917671-00037	Belt - XPZ 1800	7
19	00-917671-00170	Shaft - Counter	1
20	00-917671-00173	Seeger Ring	1
21	00-917671-00034	NLA - Obsolete--Bearing - 6309 2RS	1
22		Acorn Nut	1
23		Washer	1
24		Rod - Tie	1
25	00-917671-00050	Pin - Transmission Support	1
26		Nut	1
27		Set Screw M8 x 25	1
28	00-917671-00084	Pin - Transmission Support	1
29	00-917671-00165	Support - Bowl Double Pulley	1
30	00-917671-00166	Spacer - Countershaft	1
31	00-917671-00034	NLA - Obsolete--Bearing - 6309 2RS	1
32	00-917671-00167	Pulley - Transmission	1
33	00-917671-00038	NLA - Obsolete--Belt - XPZ 1900	2
34	00-917671-00074	Lock - Taper	1
35		Screw M6 x 25 Hex Socket Hd	8
36	00-917671-00175	Motor	1
37	00-917671-00162	Pulley	1
38	00-917671-00050	Pin - Transmission Support	2
39	00-917671-00202	Rod - Tie	1
40		Washer	1
41		Acorn Nut	1
42		Nut	4
43		Washer	4
44	00-917671-00157	Support - Motor Bowl	1
45	00-917671-00156	Pin - Motor Plate	1
46		Set Screw	2
47		Nut	2
48		Set Screw M8 x 30	1
49		Nut	1
50		Washer	4
51		Screw Hex Hd	4

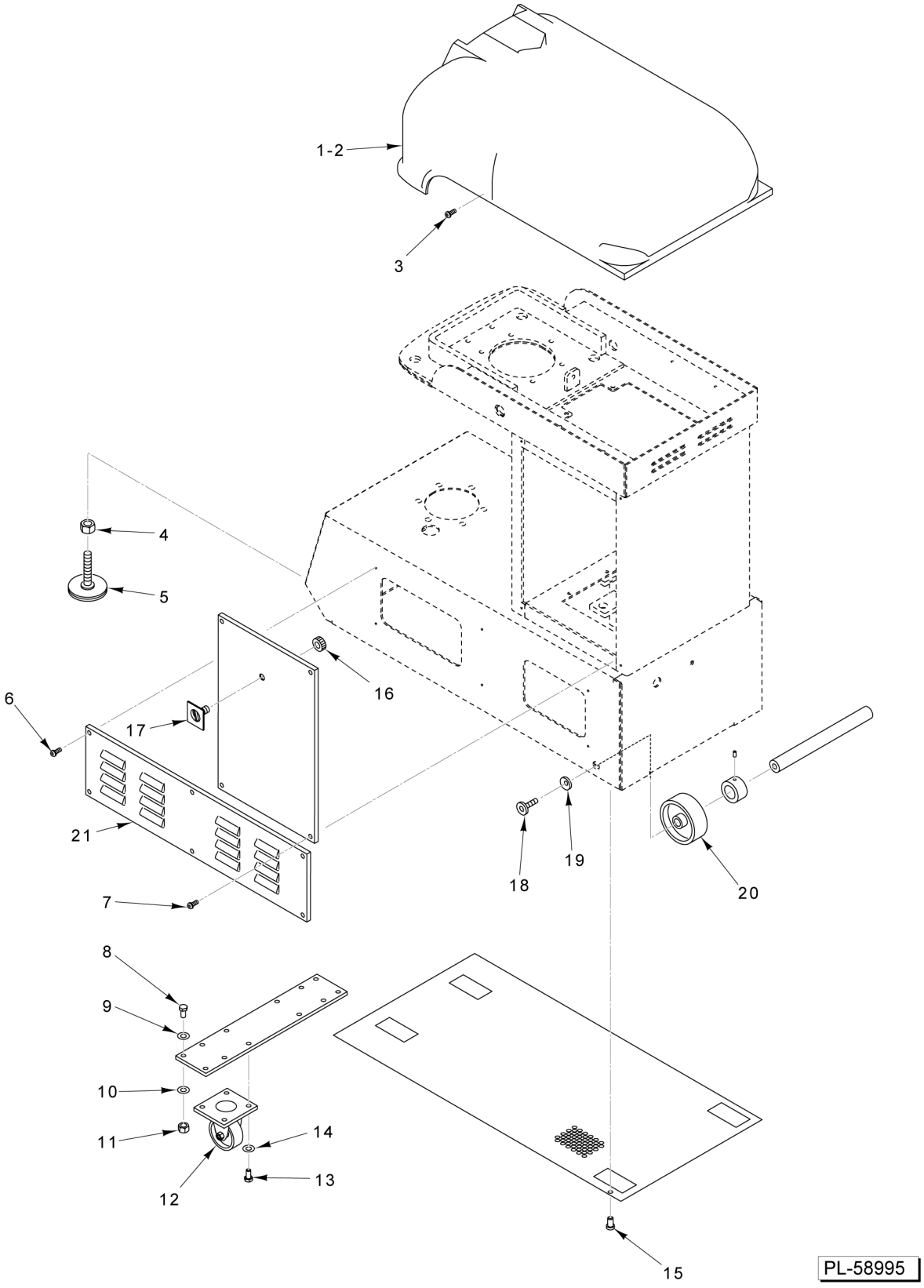

PANELS AND COVERS

PANELS AND COVERS

ILLUS. PL-58995	PART NO.	NAME OF PART	AMT.
1	00-917671-00117	Cover - Top (HSL180, HSL220, & HSL300)	1
2	00-917671-00152	Cover - Top (HSL350)	1
3		Screw M5 x 20 Hex Button Hd	2
4		Nut	2
5	00-917671-00118	Foot (Adjusting)	2
6		Screw M6 x 25 Hex Button Hd	6
7		Screw M6 x 25 Hex Button Hd	4
8		Screw M8 x 35 Hex Hd	4
9		Washer	4
10		Washer	4
11		Nut	4
12	00-917671-00119	Caster - Front	2
13		Screw M8 x 17 Hex Hd	8
14		Washer	8
15		Screw M5 x 12 Hex Button Hd	18
16		Lock Nut	1
17	00-917671-00090	Actuator - Main Power	1
18		Screw Flat Socket Hd	2
19		Washer	2
20	00-917671-00120	Wheel	2
21	00-917671-00128	Panel	1

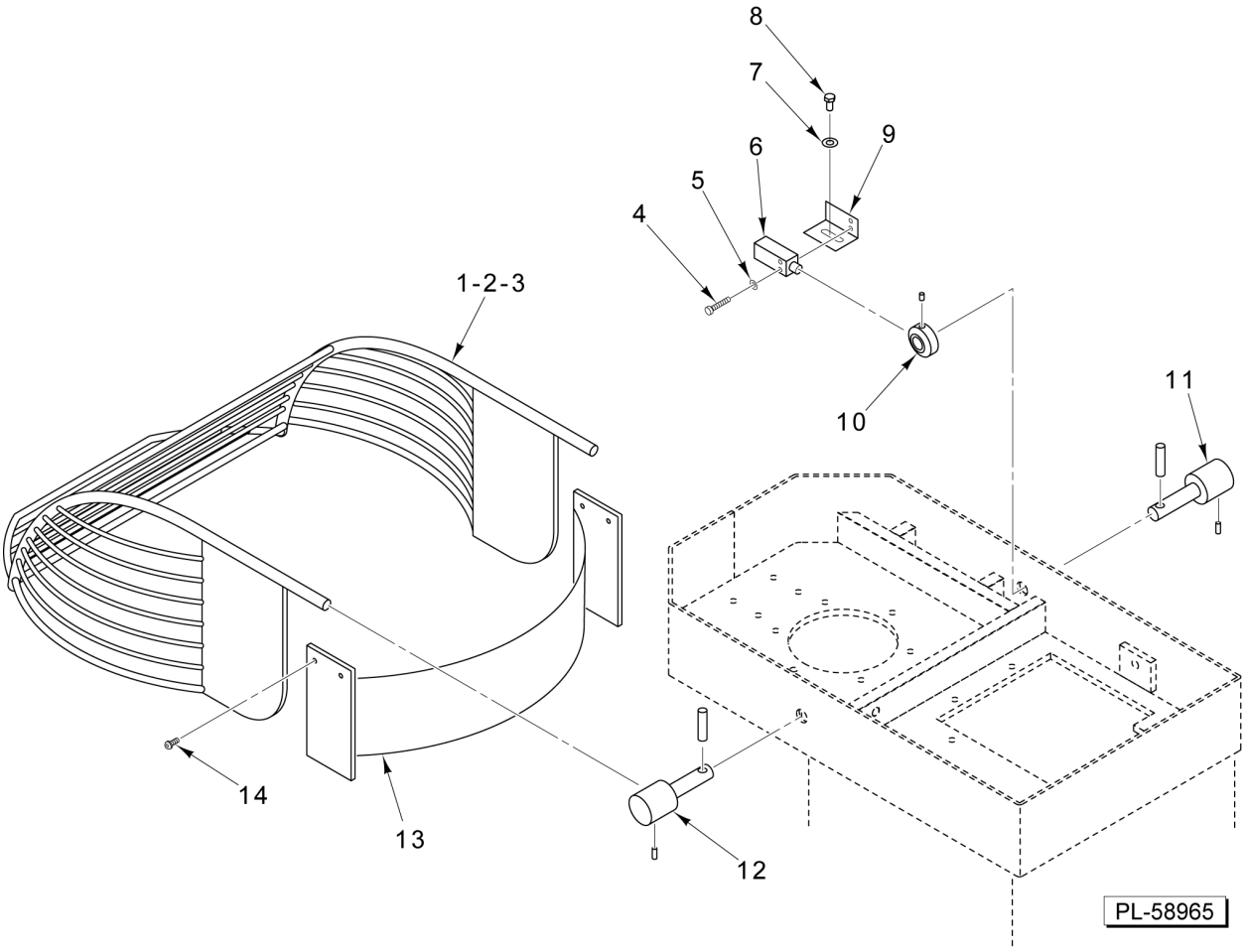

BOWL GUARD

BOWL GUARD

ILLUS. PL-58965	PART NO.	NAME OF PART	AMT.
1	00-917671-00127	Guard - Bowl (HSL180 & HSL220)	1
2	00-917671-00196	Guard - Bowl (HSL300)	1
3	00-917671-00218	Guard - Bowl (HSL350)	1
4		Screw M5 x 30 Hex Socket Hd	2
5		Washer	2
6	00-917671-00122	Microswitch	1
7		Washer	1
8		Screw M8 x 15 Hex Hd	1
9	00-917671-00123	Support - Microswitch	1
10	00-917671-00124	Cam Control	1
11	00-917671-00126	Shaft - Rotating Protection	1
12	00-917671-00125	Shaft - Rotating Protection	1
13	00-917671-00121	Guard - Splash	1
14		Screw M8 x 16 Hex Button Hd	4