CATALOG OF REPLACEMENT PARTS



HL800CE/AUS & HL1400CE/AUS SERIES LEGACY MIXER

ML-141075	HL800CE
ML-141076	HL800AUS
ML-141079	HL1400CE
ML-141080	HL1400AUS
ML-141112	HL1400N(CE)

PRIOR ML COVERED IN THIS CATALOG

ML-141083	HL1400N(CE)

A product of HOBART 701 S. RIDGE AVENUE TROY, OHIO 45374-0001

FORM 43274 Rev. E (January 2026)

 © HOBART 2026

Table of Contents

5 CONTROL PANEL
7 ELECTRICAL COMPONENTS (HL800 SERIES)
9 ELECTRICAL COMPONENTS (HL1400 SERIES)
11 WIRE SHIELD COMPONENTS
13 BASE AND PEDESTAL
15 APRON AND SLIDEWAYS
17 BOWL SUPPORT (ALL EXCEPT ML-141083 & ML-141112)
19 BOWL SUPPORT (ML-141083 & ML-141112)
21 TRANSMISSION CASE AND MOTOR
23 TRANSMISSION
25 PLANETARY (HL800 SERIES)
27 PLANETARY (HL1400 SERIES)
31 BOWL GUARD
33 AGITATORS AND ACCESSORIES (40 & 60 QUART)
35 AGITATORS AND ACCESSORIES (80 & 140 QUART)
37 BOWL AND EXTENSIONS

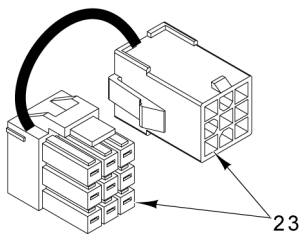

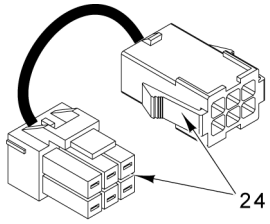

26 Harness - Switch (Mix & Stop)
27 Harness - Time Pot
28 Harness - SPD Speed

PARTS NOT ILLUSTRATED

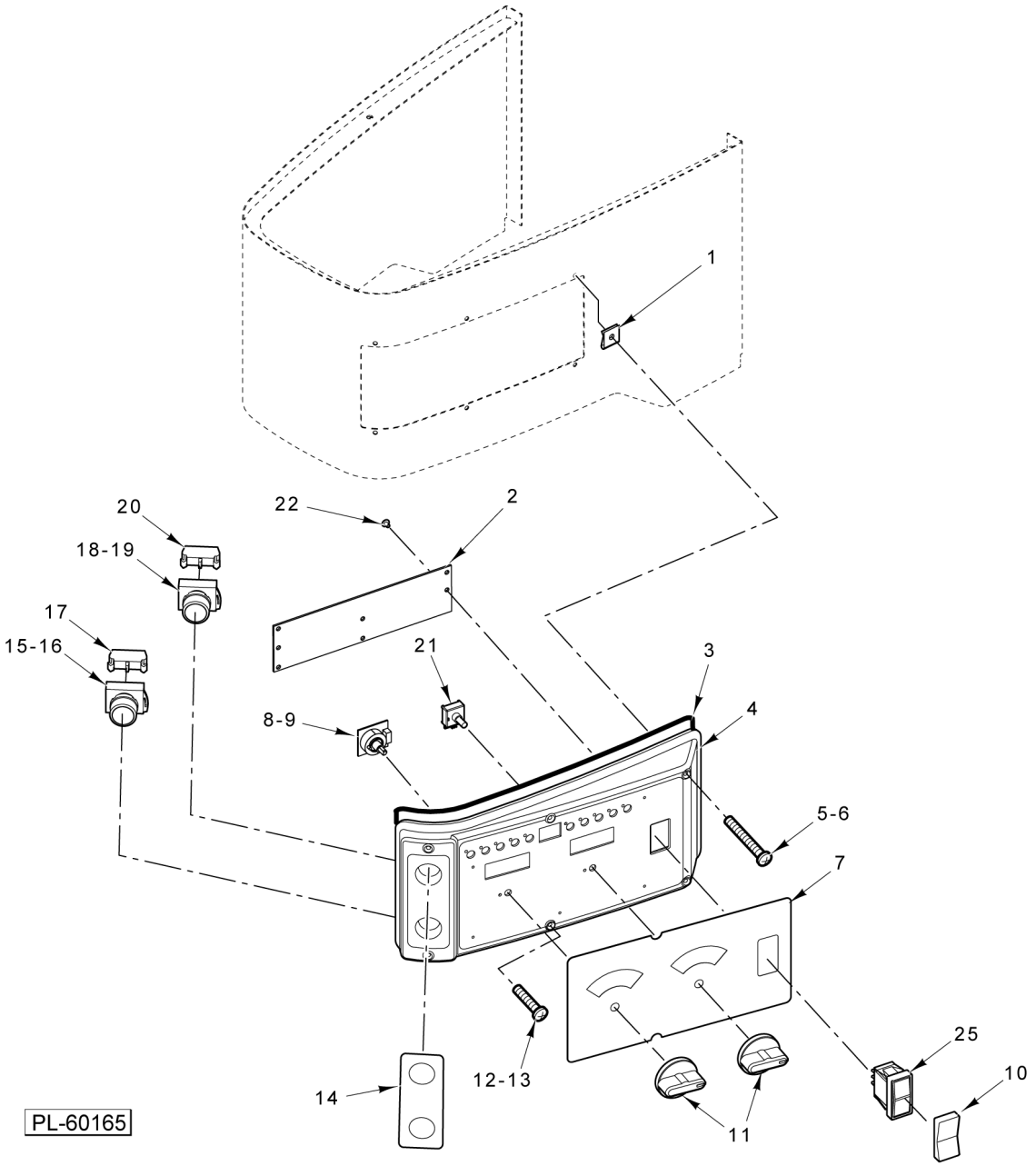

CONTROL PANEL

CONTROL PANEL

ILLUS. PL-60165	PART NO.	NAME OF PART	AMT.
1	00-874338	Fastener - Self-Retaining	6
2	00-937277	PCB Assy. (Standard Timer)	1
3	00-875814	Seal - Control Panel	1
4	00-917220	Panel - Control	1
5	SC-131-37	Mach. Screw 8-32 x 2-1/4 Slotted Oval Hd	2
6	SC-128-40	Mach. Screw 8-32 x 2-1/4 Phil. Oval Hd. (SST) (ML-141076 & ML-141080)	2
7	00-916233	Overlay (Standard Timer)	1
8	00-937371	PCB Assy. (Speed Select) (Multi-Drive) (Before SN 311639541 used with Item 28)	1
9	00-938756	Switch - Speed Select Assy. (Mini-Drive) (Starting SN 311639541 used on HL1400 and HL1400N only. Includes harness.)	1
10	00-937533	Switch Cover	1
11	00-937364	Knob	2
12	SC-129-28	Mach. Screw 8-32 x 1-1/2 Slotted Oval Hd. (SST)	4
13	SC-128-39	Mach. Screw 8-32 x 1-1/2 Phil. Oval Hd. (SST) (ML-141076 & ML-141080)	4
14	00-875963	Label (Start/Stop)	1
15	00-478752-00002	Switch - Operator (Stop)	1
16	00-478751-00001	Cap - Round Push Button (Extended)	1
17	00-087711-322-4	Block - Contact (NC) (Stop)	1
18	00-478752-00001	Switch - Operator (Start)	1
19	00-478753-00001	Cap - Round Push Button (Flush)	1
20	00-087711-322-3	Block - Contact (Start)	1
21	00-937361	Potentiometer (Timer)	1
22	SD-039-23	Self-Tapping Screw 6-32 x 1/4 Hex. Hex Washer Hd., Type RL	3
23	00-937620	Harness - Service Adapter FEM 6P	1
24	00-937622	Harness - Service Adapter FEM 9P	1
25	00-087711-330-1	Switch - Rocker	1
26	00-937295	Harness - Switch (Mix & Stop)	1
27	00-937363	Harness - Time Pot	1
28	00-937373	Harness - SPD Speed	1

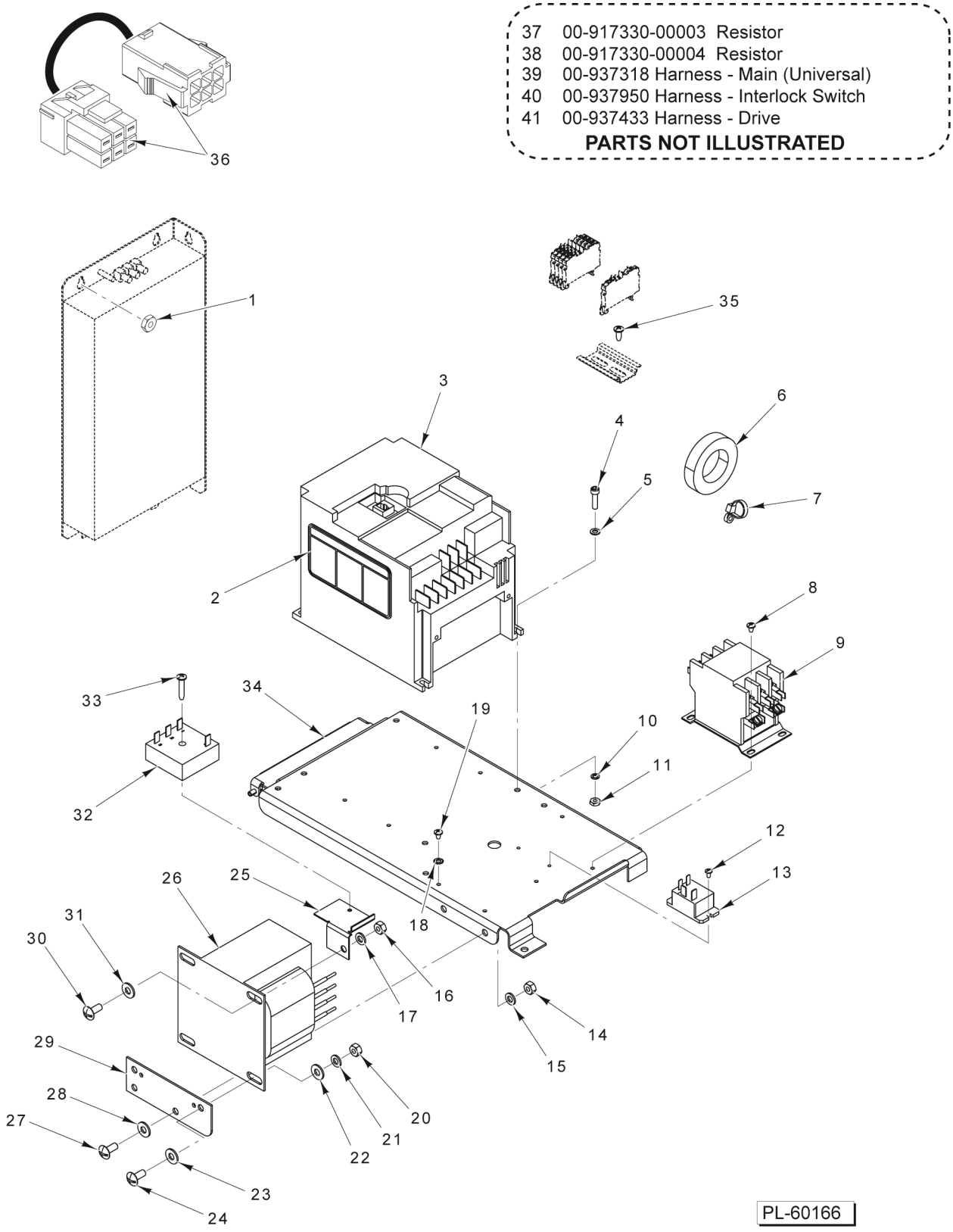

37 00-917330-00003 Resistor
38 00-917330-00004 Resistor
39 00-937318 Harness - Main (Universal)
40 00-937950 Harness - Interlock Switch
41 00-937433 Harness - Drive

PARTS NOT ILLUSTRATED

ELECTRICAL COMPONENTS (HL800 SERIES)

ELECTRICAL COMPONENTS
(HL800 SERIES)

ILLUS. PL-60166	PART NO.	NAME OF PART	AMT.
1	NS-009-22	Nut 10-24 Hex	3
2	00-438131-00180	Label - Warning	1
3	00-937564-00002	Controller (5 Hp.) (Incls. Resistor)	1
4	SC-040-04	Cap Screw 10-32 x 3/4 Hex Socket Hd	4
5	WS-002-15	Washer	4
6	00-916185-00001	Ferrite	1
7	00-113703	Cable Tie	1
8	SD-015-39	Self-Tapping Screw 8-32 x 1/4 Phil. Pan Hd., Type TT	2
9	00-087713-107-4	Contactor (30 Amp./Aux., 3 Ph.)	1
10	WL-003-22	Lockwasher #10 Light	4
11	NS-009-30	Nut 10-32 Hex	4
12	SD-015-37	Self-Tapping Screw 6-32 x 1/4 Phil. Pan Hd., Type TT	2
13	00-916904-002-1	Relay (1-Pole) (30 Amp.)	1
14	NS-013-02	Nut 1/4-20 Hex	2
15	WL-003-38	Lockwasher 1/4 Helical	2
16	NS-013-02	Nut 1/4-20 Hex	1
17	WL-003-38	Lockwasher 1/4 Helical	1
18	WL-007-06	Lockwasher #8 External	1
19	SD-015-39	Self-Tapping Screw 8-32 x 1/4 Phil. Pan Hd., Type TT	1
20	NS-013-02	Nut 1/4-20 Hex	2
21	WL-003-38	Lockwasher 1/4 Helical	2
22	WS-017-25	Washer	2
23	WS-017-25	Washer	2
24	SC-120-12	Mach. Screw 1/4-20 x 5/8 Phil. Truss Hd	2
25	00-937414	Bracket - Time Delay Relay	1
26	00-916905-00003	Transformer (425 VA., 50-60 Hz.)	1
27	SC-120-12	Mach. Screw 1/4-20 x 5/8 Phil. Truss Hd	2
28	WS-017-25	Washer	2
29	00-937415	Bracket - Transformer	1
30	SC-120-12	Mach. Screw 1/4-20 x 5/8 Phil. Truss Hd	1
31	WS-017-25	Washer	1
32	00-916642	Relay - Time Delay	1
33	SD-022-25	Self-Tapping Screw 10-16 x 1 Phil. Pan Hd., Type AB	1
34	00-937418	Plate Assy. - Drive Mount	1
35	SC-018-62	Mach. Screw 10-24 x 3/8 Phil. Pan Hd	2
36	00-937619	Harness - Service Adapter Male 6P	1
37	00-917330-00003	Resistor (200-240 V.)	1
38	00-917330-00006	Resistor (380-460 V.)	1
39	00-937318	Harness - Main (Universal)	1
40	00-937950	Harness - Interlock Switch	1
41	00-937946	Harness - Drive	AR

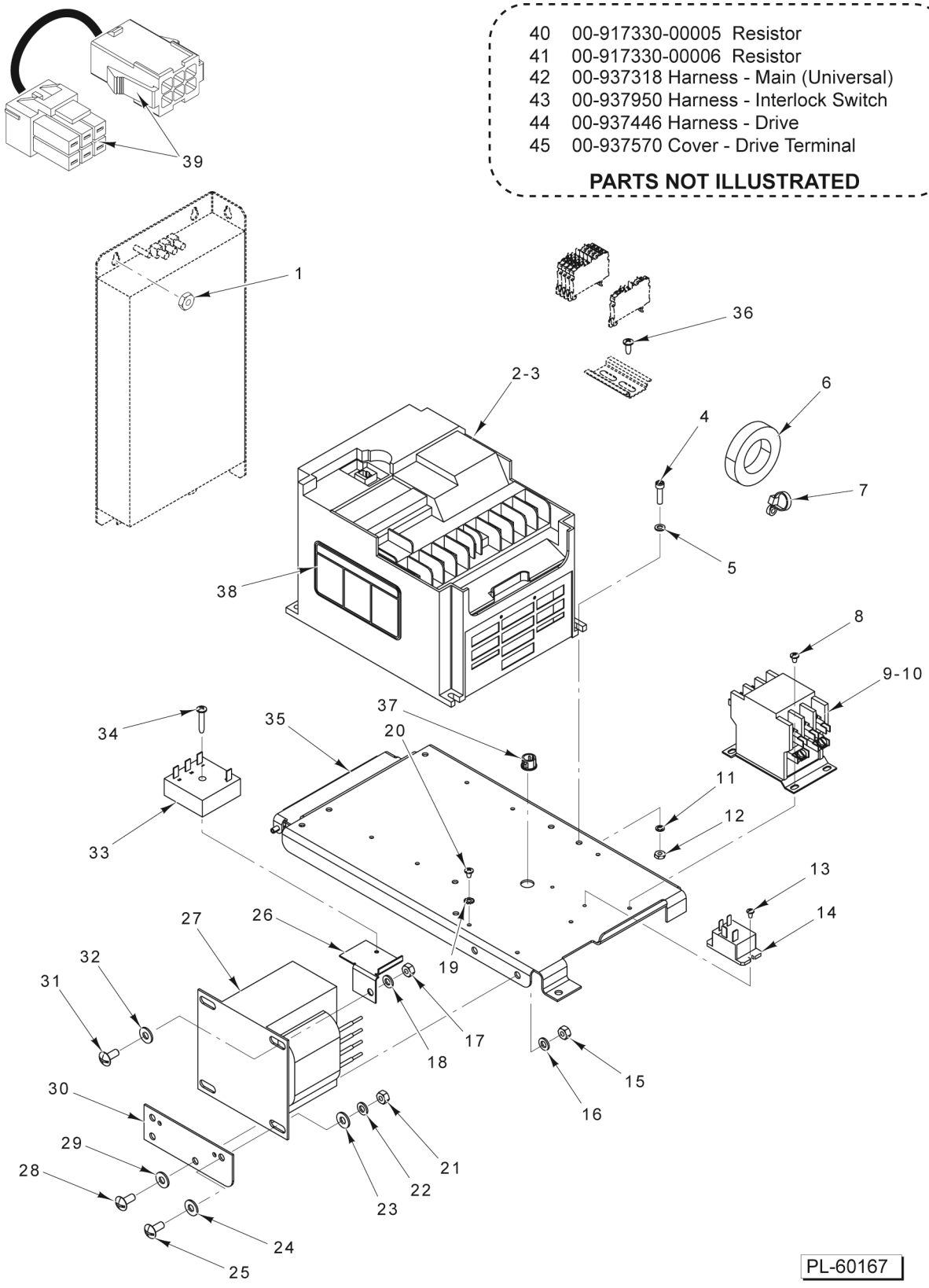

ELECTRICAL COMPONENTS
(HL1400 SERIES)

ELECTRICAL COMPONENTS
(HL1400 SERIES)

ILLUS. PL-60167	PART NO.	NAME OF PART	AMT.
1	NS-009-22	Nut 10-24 Hex	3
2	00-937333-00002	Controller (10 Hp.) (ML-141079 & ML-141080)	1
3	00-937334-00002	Controller (10 Hp.) (ML-141083 & ML-141112)	1
4	SC-040-04	Cap Screw 10-32 x 3/4 Hex Socket Hd	4
5	WS-002-15	Washer	4
6	00-916185-00001	Ferrite	1
7	00-113703	Cable Tie	1
8	SD-015-39	Self-Tapping Screw 8-32 x 1/4 Phil. Pan Hd., Type TT	2
9	00-087713-107-4	Contactor (30 Amp./Aux., 3 Ph.)	1
10	00-087713-107-5	Contactor (30 Amp./Aux., 3 Ph.) (ML-141112)	1
11	WL-003-22	Lockwasher #10 Light	4
12	NS-009-30	Nut 10-32 Hex	4
13	SD-015-37	Self-Tapping Screw 6-32 x 1/4 Phil. Pan Hd., Type TT	2
14	00-916904-002-1	Relay (1-Pole) (30 Amp.)	1
15	NS-013-02	Nut 1/4-20 Hex	2
16	WL-003-38	Lockwasher 1/4 Helical	2
17	NS-013-02	Nut 1/4-20 Hex	1
18	WL-003-38	Lockwasher 1/4 Helical	1
19	WL-007-06	Lockwasher #8 External	1
20	SD-015-39	Self-Tapping Screw 8-32 x 1/4 Phil. Pan Hd., Type TT	1
21	NS-013-02	Nut 1/4-20 Hex	2
22	WL-003-38	Lockwasher 1/4 Helical	2
23	WS-017-25	Washer	2
24	WS-017-25	Washer	2
25	SC-120-12	Mach. Screw 1/4-20 x 5/8 Phil. Truss Hd	2
26	00-937414	Bracket - Time Delay Relay	1
27	00-916905-00003	Transformer (425 VA., 50-60 Hz.)	1
28	SC-120-12	Mach. Screw 1/4-20 x 5/8 Phil. Truss Hd	2
29	WS-017-25	Washer	2
30	00-937415	Bracket - Transformer	1
31	SC-120-12	Mach. Screw 1/4-20 x 5/8 Phil. Truss Hd	1
32	WS-017-25	Washer	1
33	00-916642	Relay - Time Delay	1
34	SD-022-25	Self-Tapping Screw 10-16 x 1 Phil. Pan Hd., Type AB	1
35	00-937418	Plate Assy. - Drive Mount	1
36	SC-018-62	Mach. Screw 10-24 x 3/8 Phil. Pan Hd	2
37	FE-016-31	Bushing - Snap 3/8	1
38	00-438131-00180	Label - Warning	1
39	00-937619	Harness - Service Adapter Male 6P	1
40	00-917330-00005	Resistor	1
41	00-917330-00006	Resistor	1
42	00-937318	Harness - Main (Universal)	1
43	00-937950	Harness - Interlock Switch	1
44	00-937946	Harness - Drive	1
45	00-937570	Cover - Drive Terminal (ML-141112)	1

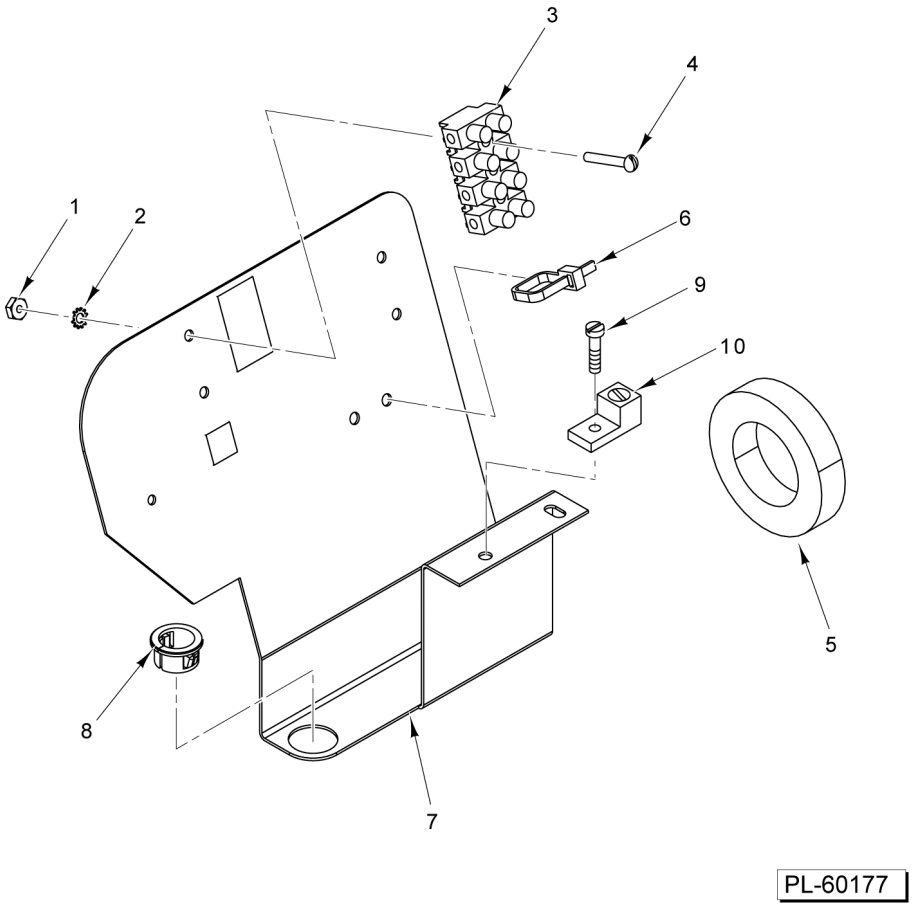

WIRE SHIELD COMPONENTS

WIRE SHIELD COMPONENTS

ILLUS. PL-60177	PART NO.	NAME OF PART	AMT.
1	NS-009-07	Nut 6-32 Hex	2
2	WL-014-03	Lockwasher #6 External (SST)	2
3	00-477562-00002	Block - Terminal	1
4	SC-009-64	Mach. Screw 6-32 x 1 Slotted Rd. Hd	2
5	00-916185-00001	Ferrite	1
6	00-113703	Cable Tie	1
7	00-916173	Shield - Wire	1
8	FE-021-13	Bushing (Nylon) 1/2 I.D	1
9	SD-029-02	Self-Tapping Screw 10-24 x 1/2 Slotted Pan Hd., Type F (ML-141112)	1
10	00-118544-00001	Lug - Solderless (ML-141112)	1

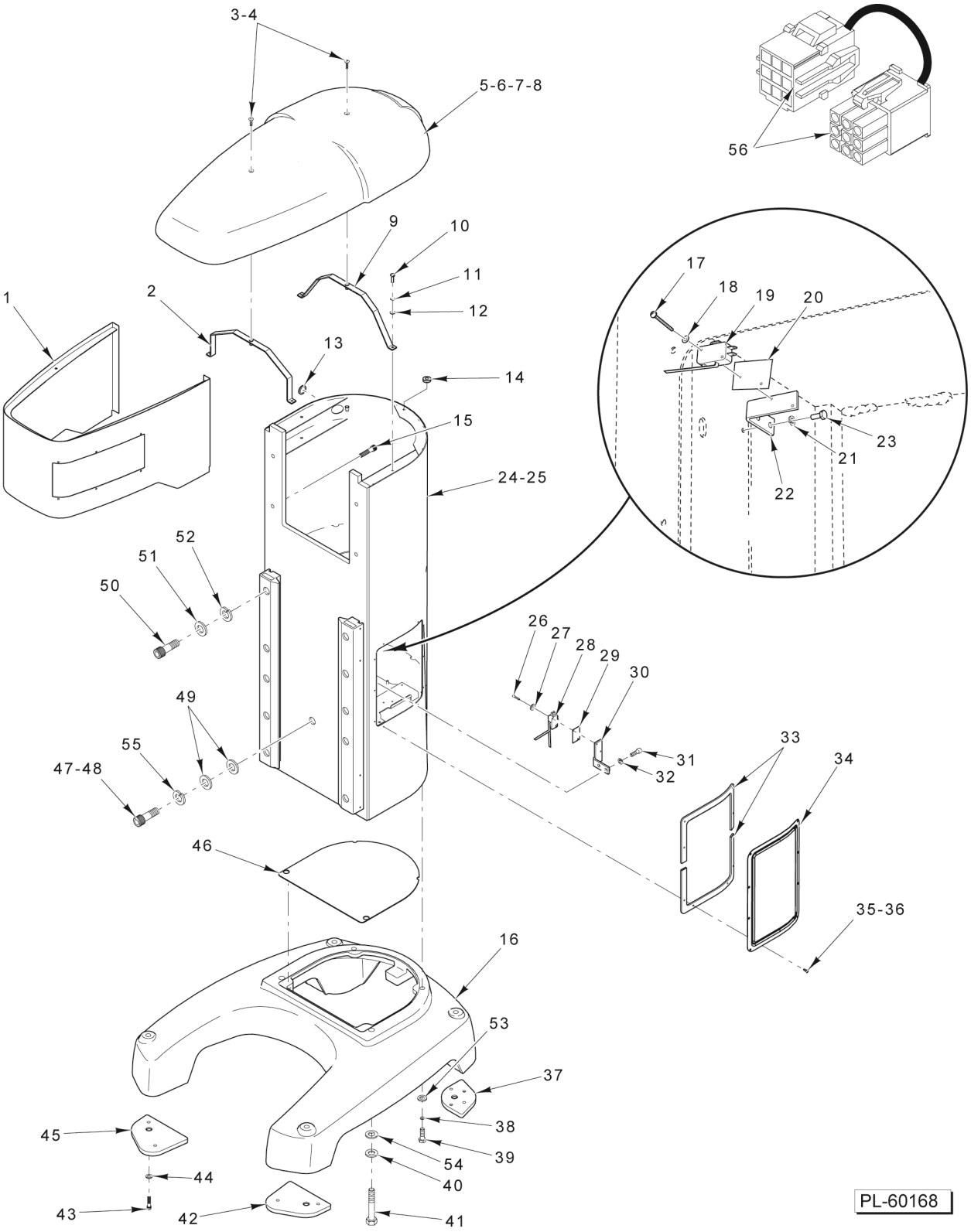

BASE AND PEDESTAL

BASE AND PEDESTAL

ILLUS. PL-60168	PART NO.	NAME OF PART	AMT.
1	00-875860	Wrapper Assy. - Transmission	1
2	00-874569	Strap Assy. - Top Cover	1
3		Machine Screw 1/4-20 x 1 Phil Oval Hd. (All Except ML-141076 & ML-141080)	2
4	SC-120-29	Mach. Screw 1/4-20 x 1 Phil. Oval Hd. (ML-141076 & ML-141080)	2
5	00-917219-00002	Top - Cover (All Except ML-141076, ML-141080, & ML-141112)	1
6	00-917219	Top - Cover (ML-141076 & ML-141080, & ML-141112)	1
7	00-874512-00001	Seal - Top Cover (Rear)	1
8	00-874512-00002	Seal - Top Cover	1
9	00-874571	Strap Assy. - Top Cover	1
10	SC-036-06	Cap Screw 1/4-20 x 1 Hex Hd	4
11	WL-003-38	Lockwasher 1/4 Helical	4
12	WS-003-43	Washer (SST)	4
13	FE-026-44	Relief - Electrical Strain	1
14	FE-024-23	Bushing - Electrical (Snap)	1
15	SC-120-38	Cap Screw 5/16-18 x 1 Hex Hd	4
16	00-873960-003-2	Base	1
17	SC-060-40	Mach. Screw 4-40 x 5/8 Slotted Rd. Hd	2
18	WL-003-03	Lockwasher #4 Helical	2
19	00-087711-00248	Switch - Bowl Height	1
20	00-873376	Insulator	1
21	WL-003-38	Lockwasher 1/4 Helical	2
22	00-874578	Bracket - Bowl Height Switch	1
23	SC-089-02	Cap Screw 1/4-20 x 3/4 Hex Socket Hd	2
24	00-916056-00002	Pedestal (HL800 Series)	1
25	00-916051-00002	Pedestal (HL1400 Series)	1
26	SC-060-40	Mach. Screw 4-40 x 5/8 Slotted Rd. Hd	2
27	WL-003-03	Lockwasher #4 Helical	2
28	00-087711-00248	Switch - Bowl Height	1
29	00-873376	Insulator	1
30	00-873371	Bracket - Down Limit Switch	1
31	SC-089-02	Cap Screw 1/4-20 x 3/4 Hex Socket Hd	2
32	WL-003-38	Lockwasher 1/4 Helical	2
33	00-875815	Seal - Side Panel	2
34	00-937159-00002	NLA - Obsolete--Cover - Side (Incls. Item 33)	1
35	SC-093-03	Mach. Screw 8-32 x 3/8 Slotted Pan Hd. (SST) (All Except ML-141076 & ML-141080)	8
36	SD-009-41	Self-Tapping Screw 8-32 x 3/8 Phil. Pan Hd., Type F (SST) (ML-141076 & ML-141080)	8
37	00-874149	Pad - Foot (Rear)	2
38	WL-004-11	Lockwasher 1/2 Helical	2
39	SC-037-01	Cap Screw 1/2-13 x 1-1/2 Hex Hd	2
40	WL-004-19	Lockwasher 5/8 Helical	2
41	SC-062-18	Cap Screw 5/8-11 x 3-1/4 Hex Hd	2
42	00-874150	Pad - Front (Left)	1
43	SC-110-03	Cap Screw 3/8-16 x 3/4 Hex Socket Hd	8
44	WS-005-49	Washer	8
45	00-874153	Pad - Foot (Right)	1
46	00-874327	Plate - Pedestal Bottom	1
47	SC-110-55	Cap Screw 1/2-20 x 1-1/4 Hex Socket Hd. (All Except ML-141083)	1
48	SC-131-09	Set Screw 1/2-20 x 1/2 Hex Hdls., SL Cup Pt. (ML-141083)	1
49	WS-008-04	Washer (All Except ML-141083)	2
50	SC-040-69	Cap Screw 1/2-20 x 2 Hex Socket Hd	10
51	WL-004-11	Lockwasher 1/2 Helical	10
52	WS-008-04	Washer	10
53	WS-008-04	Washer	2
54	WS-030-85	Washer	6
55	WL-004-11	Lockwasher 1/2 Helical (All Except ML-141083)	1
56	00-937621	Harness - Service Adapter Male 9P	1

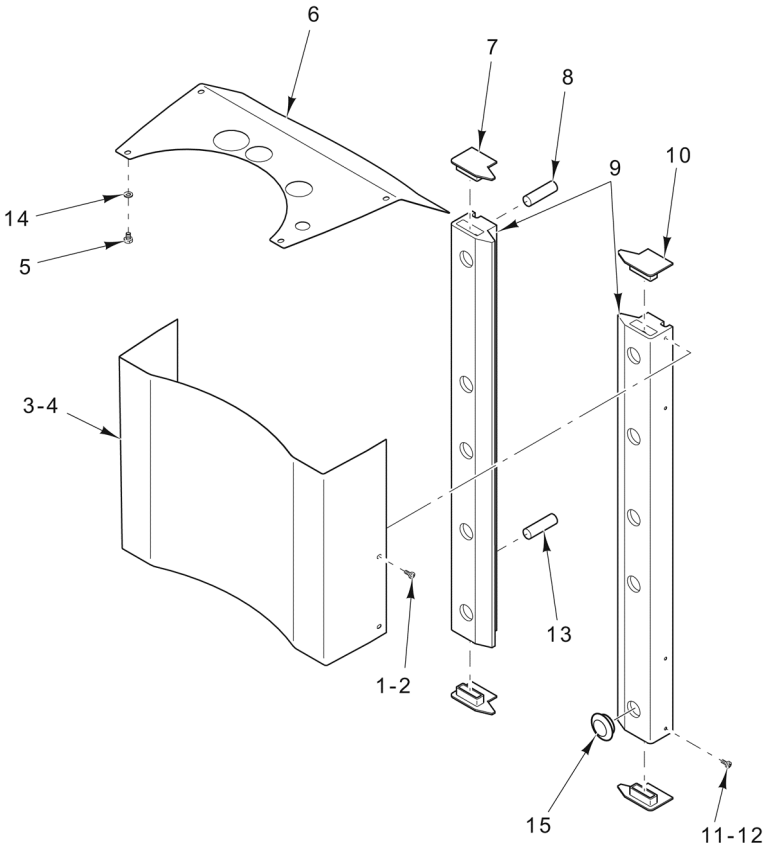

PL-60182

APRON AND SLIDEWAYS

APRON AND SLIDEWAYS

ILLUS. PL-60182	PART NO.	NAME OF PART	AMT.
1	SC-021-21	Mach. Screw 10-24 x 1/4 Slotted Pan Hd. (SST)	4
2	SC-128-95	Mach. Screw 10-24 x 1/4 Phil. Rd. Hd. (ML-141076 & ML-141080)	4
3	00-916087	Apron - Back (HL800 Series)	1
4	00-916088	Apron - Back (HL1400 Series)	1
5	SC-041-86	Cap Screw 1/4-20 x 3/8 Hex Hd. (SST)	4
6	00-874597	Apron - Top	1
7	00-479619	Cap - Slideway	2
8	00-011800-00143	Pin - Dowel 1/2 x 1-3/4 SAE	1
9	00-479598	Slideway	2
10	00-479618	Cap - Slideway	2
11	SC-021-21	Mach. Screw 10-24 x 1/4 Slotted Pan Hd. (SST)	4
12	SC-128-95	Mach. Screw 10-24 x 1/4 Phil. Rd. Hd. (ML-141076 & ML-141080)	4
13	00-011800-00143	Pin - Dowel 1/2 x 1-3/4 SAE	1
14	WL-003-38	Lockwasher 1/4 Helical	4
15	PB-005-11	Plug - Button	10

55 00-874139 Handle Assy. - Bowl Lock

PART NOT ILLUSTRATED

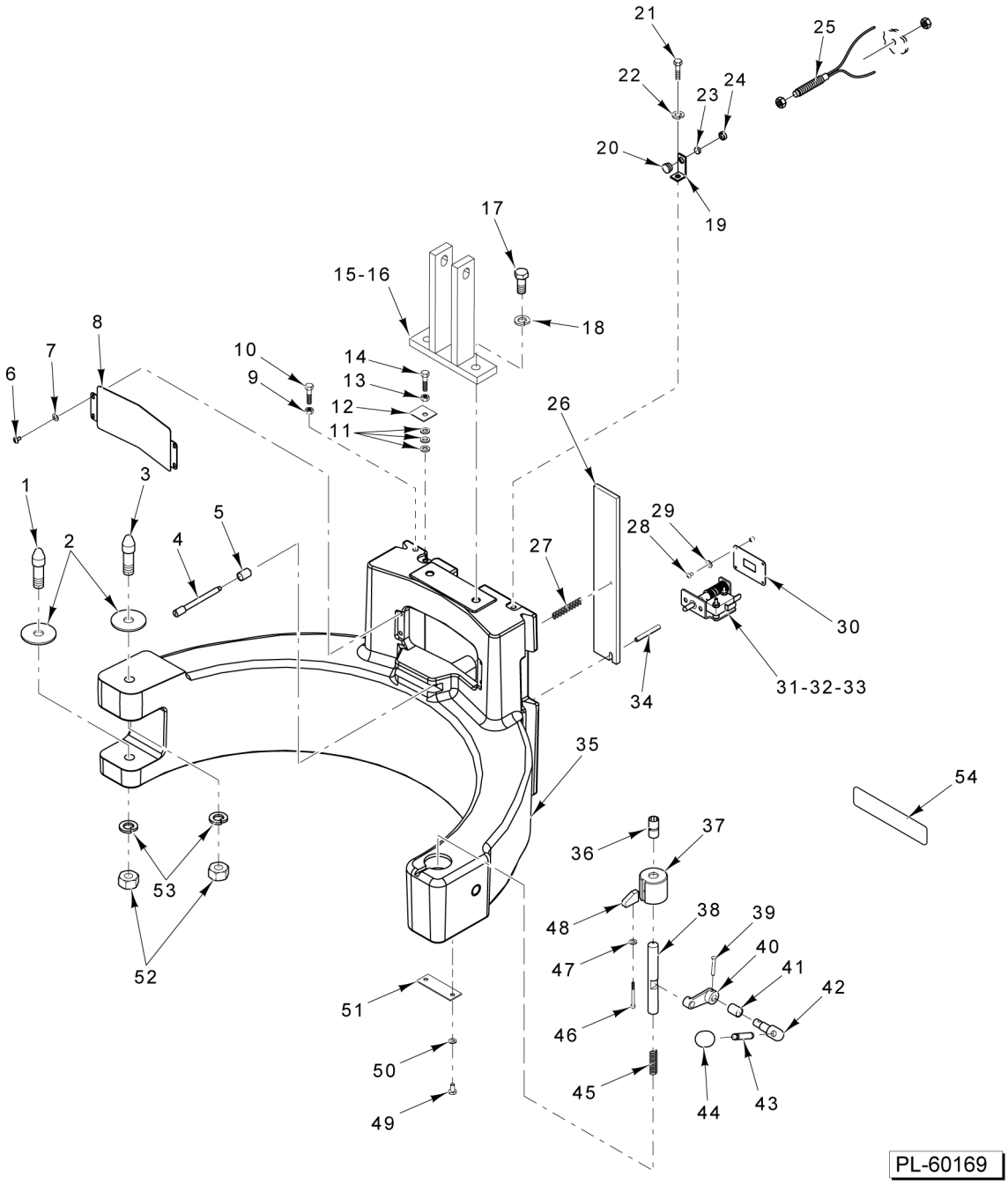

BOWL SUPPORT
(ALL EXCEPT ML-141083 & ML-141112)

BOWL SUPPORT
(ALL EXCEPT ML-141083 & ML-141112)

ILLUS. PL-60169	PART NO.	NAME OF PART	AMT.
1	00-916021	Pin - Bowl	1
2	00-916022	Bushing - Bowl Support	2
3	00-916351	Pin - Upper Bowl	1
4	00-874387	Pin - Limit	1
5	00-874492	Bushing - Bowl-In	1
6	SC-128-96	Mach. Screw 8-32 x 3/8 Phil. Truss Hd. (SST)	4
7	WL-006-02	Lockwasher #8 Helical (SST)	4
8	00-916605	Shield - Yoke	1
9	NS-013-14	Nut 5/16-18 Hex	1
10	SC-036-40	Cap Screw 5/16-18 x 1-1/4 Hex Hd	1
11	WS-006-36	Washer	3
12	00-916359	Plate - Stop Bowl Travel	1
13	NS-013-14	Nut 5/16-18 Hex	1
14	SC-036-40	Cap Screw 5/16-18 x 1-1/4 Hex Hd	1
15	00-873352-00003	Actuator - Bracket (HL800 Series)	1
16	00-873352-00002	Actuator - Bracket (HL1400 Series)	1
17	SC-062-88	Cap Screw 1/2-13 x 1-1/4 Hex Hd	2
18	WL-004-11	Lockwasher 1/2 Helical	2
19	00-916079	Bracket - Magnet	1
20	00-917358	Holder - Magnet (Lower)	1
21	SC-087-23	Cap Screw 5/16-18 x 1/2 Hex Socket Hd	1
22	WL-003-44	Lockwasher 5/16 Helical	1
23	00-874875	Magnet - Disc	1
24	00-917357	Holder - Magnet (Upper)	1
25	00-874929	Switch - Reed	1
26	00-874566-00002	Plate - Bowl In Switch	1
27	00-873377	Spring - Bowl Pin	1
28	SC-018-33	Mach. Screw 8-32 x 5/16 Phil. Pan Hd	2
29	WL-003-12	Lockwasher #8 Helical	2
30	00-874479	Plate - Bowl In Switch	1
31	00-874893-00002	Retainer	1
32	00-874903-00002	Switch Assy (HL800 Series)	1
33	00-916391	Switch Assy. (HL1400 Series)	1
34	RP-004-28	Pin - Roll 0.250	1
35	00-873337	Yoke - Bowl	1
36	00-874390	Bushing - Bowl Lock	1
37	00-874376	Button - Bowl Rest	1
38	00-874391	Pin - Bowl	1
39	00-874388	Detent - Clevis Pin	1
40	00-874218	Clevis - Bowl Lock	1
41	00-874138	Bushing - Bowl Pin Cam	1
42	00-874220	Handle - Bowl Pin	1
43	00-874197	Shaft - Bowl Pin Handle	1
44	00-875356	Handle - Lift Lever	1
45	00-874198	Spring - Bowl Pin	1
46	SC-092-27	Cap Screw 8-32 x 1-3/4 Hex Socket Hd	1
47	WL-003-12	Lockwasher #8 Helical	1
48	00-874380	Ramp - Wear	1
49	SC-036-14	Cap Screw 1/4-20 x 1/2 Hex Hd	2
50	WL-003-38	Lockwasher 1/4 Helical	2
51	00-874199	Strap - Spring Retaining	1
52	NS-013-40	Nut 5/8-11 Hex	2
53	WL-004-18	Lockwasher 5/8 Light	2
54	00-938113	Label - Unlock Warning (Trilingual)	1
55	00-874139	Handle Assy. - Bowl Lock (Incls. Items 42, 43, & 44)	1

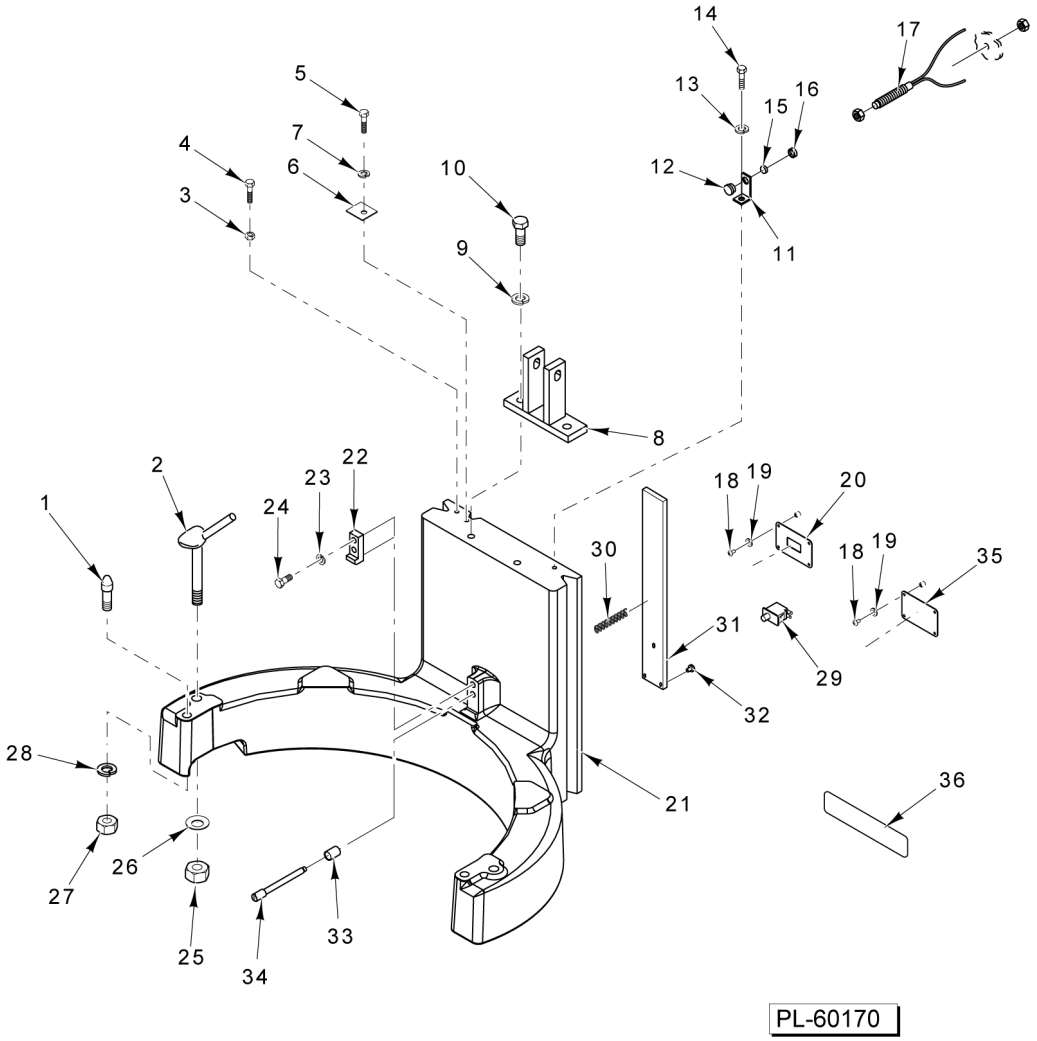

BOWL SUPPORT
(ML-141083 & ML-141112)

BOWL SUPPORT
(ML-141083 & ML-141112)

ILLUS. PL-60170	PART NO.	NAME OF PART	AMT.
1	00-019195-00001	Stud - Bowl Locating	2
2	00-065922-00020	Bowl Clamp Assy	2
3	NS-013-14	Nut 5/16-18 Hex	1
4	SC-036-40	Cap Screw 5/16-18 x 1-1/4 Hex Hd	1
5	SC-041-09	Cap Screw 5/16-18 x 1/2 Hex Hd. (SST)	1
6	00-916359	Plate - Stop Bowl Travel	1
7	WL-003-44	Lockwasher 5/16 Helical	3
8	00-873352-00002	Actuator - Bracket	1
9	WL-004-11	Lockwasher 1/2 Helical	2
10	SC-062-88	Cap Screw 1/2-13 x 1-1/4 Hex Hd	2
11	00-916079	Bracket - Magnet	1
12	00-917358	Holder - Magnet (Lower)	1
13	WL-003-44	Lockwasher 5/16 Helical	1
14	SC-087-23	Cap Screw 5/16-18 x 1/2 Hex Socket Hd	1
15	00-874875	Magnet - Disc	1
16	00-917357	Holder - Magnet (Upper)	1
17	00-874929	Switch - Reed	1
18	SC-018-33	Mach. Screw 8-32 x 5/16 Phil. Pan Hd	2
19	WL-003-12	Lockwasher #8 Helical	2
20	00-874479	Plate - Bowl In Switch (ML-141112)	1
21	00-917198-00002	Support - Bowl	1
22	00-064394-00002	Retainer - Bowl	1
23	WL-004-02	Lockwasher 3/8 Helical	2
24	SC-040-23	Cap Screw 3/8-16 x 1-1/4 Hex Socket Hd	2
25	NS-046-18	Lock Nut 5/8-11 Hex Nylok	1
26	00-064636	Washer - Bowl Clamp	2
27	NS-013-30	Nut 1/2-13 Hex	1
28	WL-006-36	Lockwasher 1/2 Helical (SST)	2
29	00-087711-00338	Switch - Panel Front	1
30	00-873377	Spring - Bowl Pin (ML-141112)	1
31	00-937604	Bar - Bowl-In Switch (ML-141112)	1
32	00-915308	Plug - Rulon (ML-141112)	2
33	00-874492	Bushing - Bowl-In (ML-141112)	1
34	00-874387	Pin - Limit (ML-141112)	1
35	00-874479	Plate - Bowl In Switch (ML-141083)	1
36	00-938113	Label - Unlock Warning (Trilingual)	1

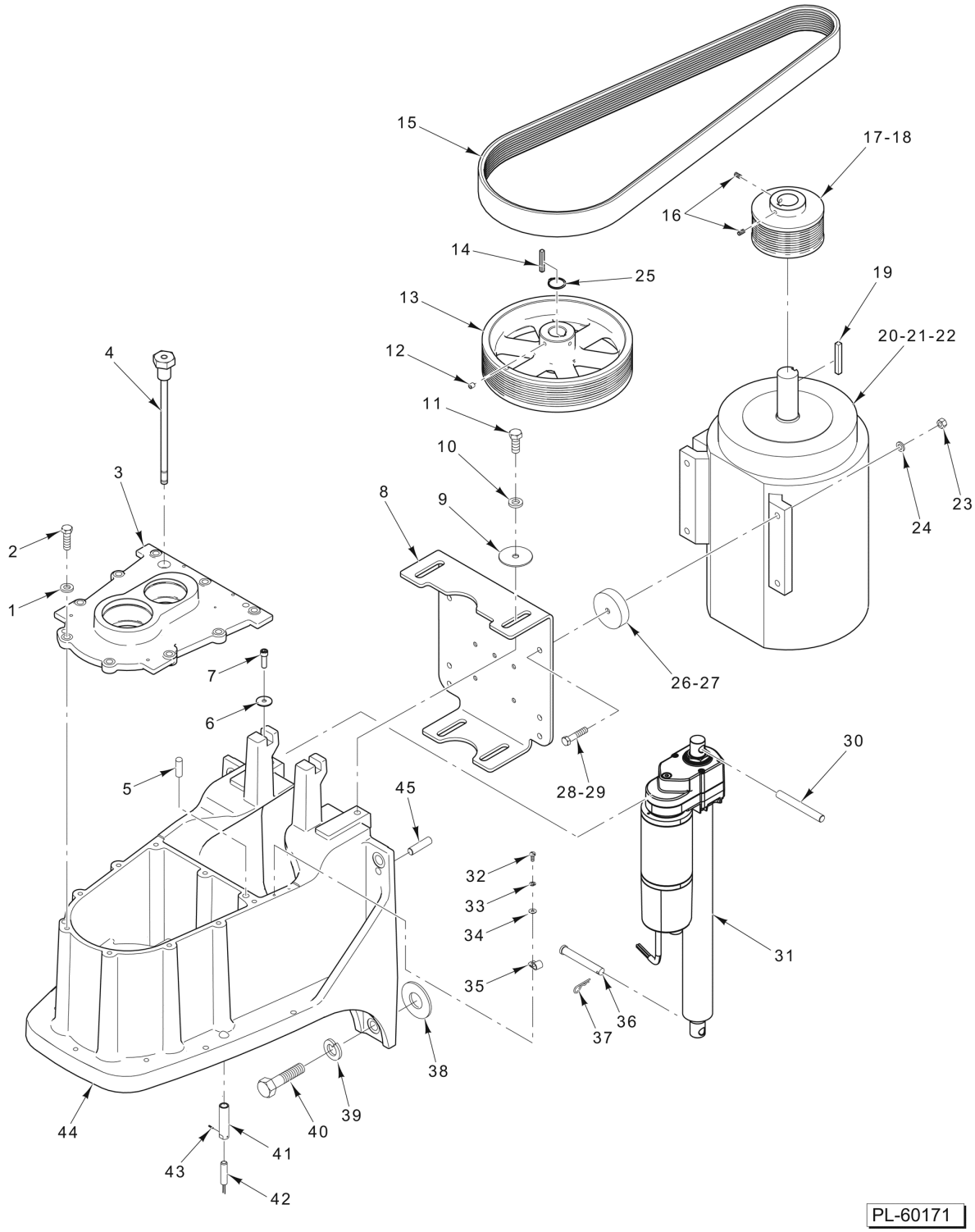

TRANSMISSION CASE AND MOTOR

TRANSMISSION CASE AND MOTOR

ILLUS. PL-60171	PART NO.	NAME OF PART	AMT.
1	WL-019-09	Lockwasher 3/8 Helical	9
2	SC-118-09	Cap Screw 3/8-16 x 1-1/4 Hex Hd	9
3	00-874653	Cover - Transmission	1
4	00-916182	Dipstick - Weldment	1
5	00-557555	NLA - Obsolete--Dowel	2
6	00-916352	Washer - Flat	2
7	SC-040-15	Cap Screw 5/16-18 x 1-1/4 Hex Socket Hd	2
8	00-874441-00002	Plate - Motor Mounting	1
9	WS-008-40	Washer	4
10	WL-019-11	Lockwasher 1/2 Helical	4
11	SC-062-88	Cap Screw 1/2-13 x 1-1/4 Hex Hd	4
12	SC-075-15	Set Screw 5/16-18 x 3/8 Hex Hdls., Cup Pt	2
13	00-916003	Sheave - Driven (10L)	1
14	00-875419-00069	Key - Chamfered	1
15	00-874493	Belt	1
16	SC-075-15	Set Screw 5/16-18 x 3/8 Hex Hdls., Cup Pt	2
17	00-875939	Sheave - Drive (HL800 Series)	1
18	00-875805	Sheave - Drive (HL1400 Series)	1
19	00-875419-00081	Key 5/16 x 5/16 x 2-3/8	1
20	00-875995-00002	Motor Assy. (HL800 Series)	1
21	00-916869-00001	Motor Assy. (HL1400N)	1
22	00-875993-00002	Motor Assy. (HL1400 Series)	1
23	NS-013-22	Nut 3/8-16 Hex	4
24	WL-004-06	Lockwasher 3/8 Helical	4
25	RR-007-02	Retaining Ring	1
26	00-875940	NLA - Obsolete--Spacer (HL800 Series)	4
27	00-873363	NLA - Obsolete--Spacer (HL1400 Series)	4
28	SC-118-08	Cap Screw 3/8-16 x 1-3/4 Hex Hd. (HL800 Series)	4
29	SC-124-91	Cap Screw 3/8-16 x 2-1/2 Hex Hd. (HL1400 Series)	4
30	00-874315	Pin - Actuator (Upper)	1
31	00-937426	Actuator Assy	1
32	SC-018-20	Mach. Screw 10-24 x 1/2 Slotted Pan Hd	2
33	WL-003-22	Lockwasher #10 Light	2
34	WS-002-51	Washer	2
35	00-078752-00012	Clamp - Cable	1
36	00-874117-00002	Pin - Clevis	1
37	PC-003-50	Cotter Pin 7/64 x 1 Lg	1
38	00-072992-00001	Shim - Transmission Case (0.010 Thk.)	AR
39	WL-004-19	Lockwasher 5/8 Helical	4
40	SC-129-34	Cap Screw 5/8-11 x 1-1/2 Hex Hd	4
41	00-874128	Extension - Bowl Guard Switch (Bowl Guard)	1
42	00-874958-00005	Switch - Reed	1
43	SC-075-14	Set Screw 6-32 x 1/8 Hex Hdls., Kn. Cup Pt	1
44	00-874641	Case - Transmission	1
45	00-508208	Pin - Dowel	2

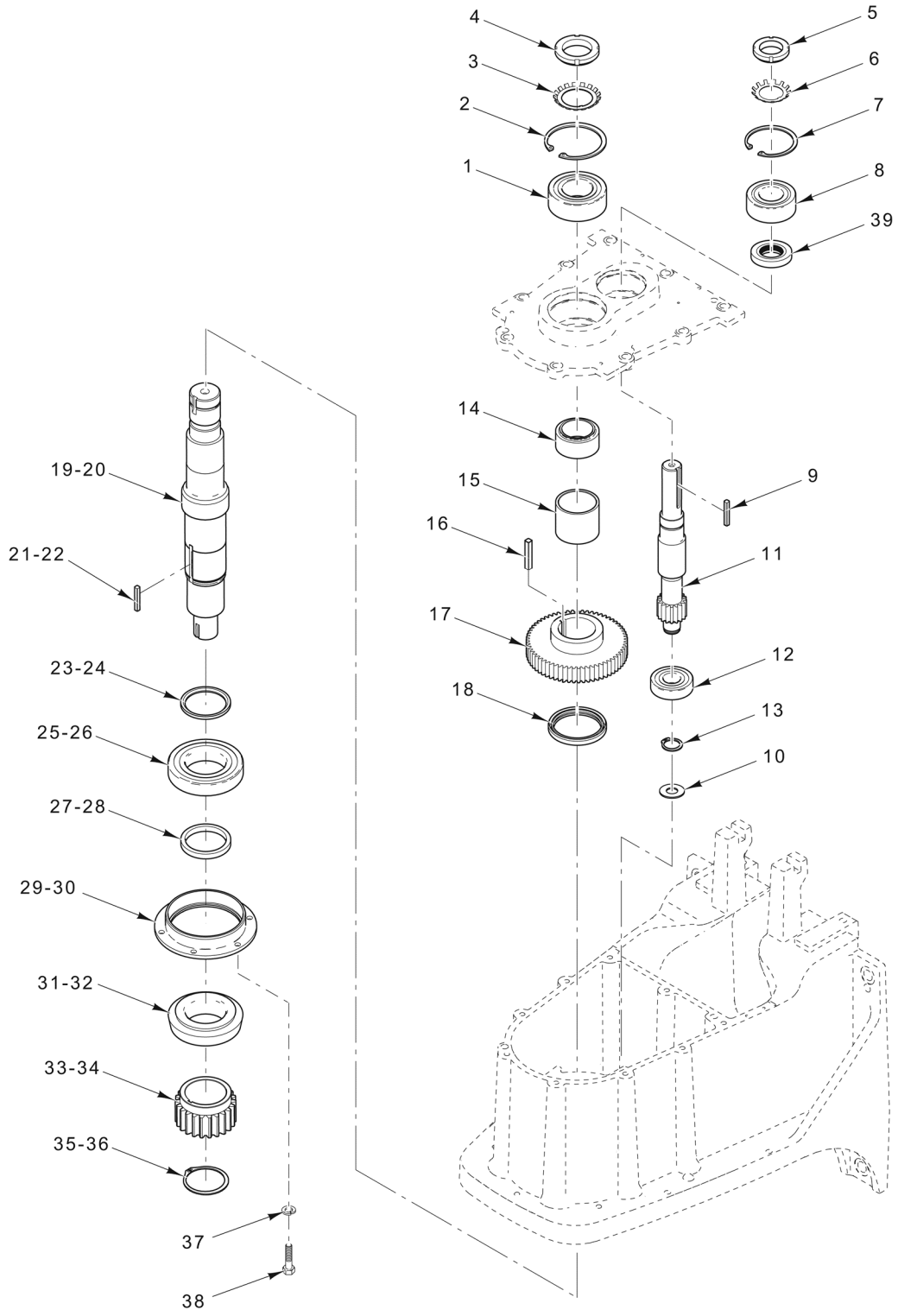

TRANSMISSION

TRANSMISSION

ILLUS. PL-60172	PART NO.	NAME OF PART	AMT.
1	BB-021-59	Bearing - Ball	1
2	RR-012-21	Retaining Ring	1
3	WL-012-10	Lockwasher N.D. #W-09	1
4	NS-034-10	Lock Nut N.D. #N-09	1
5	NS-034-08	Lock Nut N.D. #N-07	1
6	WL-012-08	Lockwasher N.D. #W-07	1
7	RR-004-24	Retaining Ring	1
8	BB-021-56	Bearing - Ball	1
9	00-875419-00069	Key - Chamfered	1
10	SL-005-17	Spring - Wave	1
11	00-916178	Shaft - Input	1
12	BB-018-22	Bearing - Ball	1
13	RR-009-07	Retaining Ring	1
14	00-874564	Spacer - Upper (Without Att. Hub)	1
15	00-874565	Spacer - Lower (Without Att. Hub)	1
16	00-875419-00079	Key 5/16 x 5/16 x 1-1/2	1
17	00-874448	Gear	1
18	00-874454	Seal - Oil	1
19	00-875855	Shaft - Planetary (HL800 Series)	1
20	00-874452	Shaft - Planetary (HL1400 Series)	1
21	00-875419-00078	Key - Chamfered (HL800 Series)	1
22	00-875419-00066	Key - Chamfered (HL1400 Series)	1
23	00-064467	Spacer - Upper (Lower Planetary) (HL800 Series)	1
24	00-067900	Spacer - Upper (Lower Planetary) (HL1400 Series)	1
25	BB-007-07	Ball Bearing - Sgl. Rod (HL800 Series)	1
26	BB-021-49	Bearing - Ball Sgl. Rod (HL1400 Series)	1
27	00-875858	Spacer - Lower (Lower Planetary) (HL800 Series)	1
28	00-874567	Spacer - Lower (Lower Planetary) (HL1400 Series)	1
29	00-875857	Carrier - Lower Bearing (HL800 Series)	1
30	00-874451	Carrier - Lower Bearing (HL1400 Series)	1
31	BR-002-14	Roller Bearing - Cup & Cone Assy. (HL800 Series)	1
32	BR-002-31	Roller Bearing - Cup & Cone Assy. (HL1400 Series)	1
33	00-064386	Gear - Sun (HL800 Series)	1
34	00-067904	Gear - Sun (HL1400 Series)	1
35	RR-004-14	Retaining Ring (HL800 Series)	1
36	RR-011-96	Retaining Ring (HL1400 Series)	1
37	WL-003-48	Lockwasher 5/16 High Collar	6
38	SC-123-75	Cap Screw 5/16-18 x 3/4 Socket Fil. Hd	6
39	00-917804	Seal - Oil	1

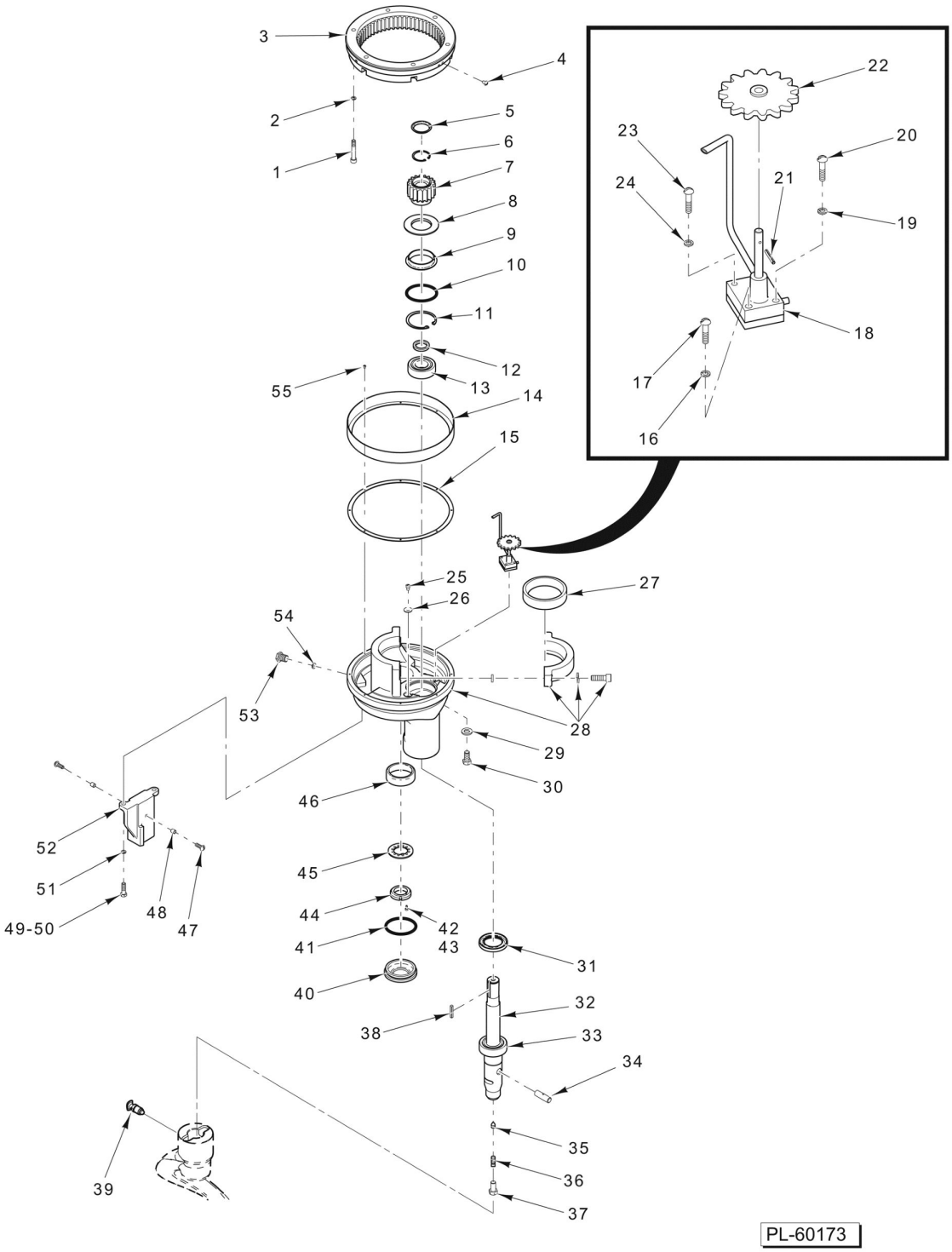

PLANETARY
(HL800 SERIES)

PLANETARY
(HL800 SERIES)

ILLUS. PL-60173	PART NO.	NAME OF PART	AMT.
1	SC-040-27	Cap Screw 3/8-16 x 2-1/4 Hex Socket Hd	6
2	WL-019-92	Lockwasher 3/8 Helical High Collar	6
3	00-438121	Gear - Internal (59T)	1
4	SC-021-39	Mach. Screw 1/4-20 x 5/8 Slotted Rd. Hd. (SST)	3
5	00-060071	Cap - Oil Retaining	1
6	RR-005-08	Retaining Ring	1
7	00-064732	Internal Pinion & Deflector Assy. (18T) (Incls. Item 8)	1
8	00-065372	NLA - Obsolete--Deflector - Oil	1
9	00-073011	Baffle - Planetary Oil	1
10	00-067500-00021	O-Ring	1
11	RR-004-24	Retaining Ring	1
12	00-065408	Spacer - Agitator Shaft	1
13	BB-006-36	Ball Bearing	1
14	00-064478	Extension	1
15	00-064464	Gasket	1
16	WL-003-22	Lockwasher #10 Light	2
17	SC-081-17	Mach. Screw 10-32 x 1 Slotted Rd. Hd. (SST)	2
18	00-290232-00001	Assy. Oil Pump (Planetary) (Incls. Items 19 thru 24)	1
19	WL-003-22	Lockwasher #10 Light	1
20	SC-060-87	Mach. Screw 10-32 x 3/4 Slotted Rd. Hd	1
21	RP-002-08	Roll Pin 5/64 Dia. x 11/16 Lg	1
22	00-064614	Gear - Drive Assy	1
23	SC-009-68	Mach. Screw 8-32 x 3/4 Slotted Rd. Hd	1
24	WL-003-15	Lockwasher #8 Light	1
25	SC-062-20	Cap Screw 1/4-20 x 3/8 Hex Hd	2
26	WS-003-46	Washer	2
27	BR-002-14	Roller Bearing - Cup & Cone Assy	1
28	00-916068-00002	Planetary Assy. (Incls. Bearing Cap)	1
29	WS-021-20	Washer (Nylon)	1
30	SC-129-38	Cap Screw 7/16-20 x 1 Hex Hd. (SST)	1
31	00-916065	Seal - Oil	1
32	00-916048	Shaft - Agitator (Incls. Item 33)	1
33	BB-007-39	Ball Bearing - M.R.C. #207-SZZ	1
34	00-873953	Pin - Agitator Shaft	1
35	00-007744	Set Screw Hdls., Cone Pt	1
36	SC-047-41	Set Screw 3/8-16 x 3/8 Hex Hdls., Cup Pt	1
37	00-064723	Plug - Agitator Shaft	1
38	00-875958	Key - Chamfered	1
39	00-874145	Plunger Assy	1
40	00-437496-00002	Cap - Seal (Painted)	1
41	00-067500-00021	O-Ring	1
42	00-065277	Cap Screw Socket Hd	1
43	WL-003-15	Lockwasher #8 Light	1
44	00-065275	Bearing - Special Lock Nut	1
45	00-064982	Washer - Tongue	1
46	BR-002-15	Roller Bearing - Cup & Cone Assy	1
47	SC-021-54	Mach. Screw 5/16-18 x 7/8 Slotted Rd. Hd. (SST)	2
48	00-874181	Spacer - Scraper Arm	2
49	SC-041-31	Cap Screw 3/8-16 x 1-1/4 Hex Hd. (SST)	2
50	SC-041-49	Cap Screw 3/8-16 x 1-3/8 Hex Hd. (SST)	2
51	WL-006-28	Lockwasher 3/8 Helical (SST)	2
52	00-873284-00002	Bracket - Bowl Scraper	1
53	00-064465-00001	Plug - Oil Fill	1
54	WS-021-20	Washer (Nylon)	1
55	SC-009-70	Mach. Screw 6-32 x 1/4 Slotted Rd. Hd	8

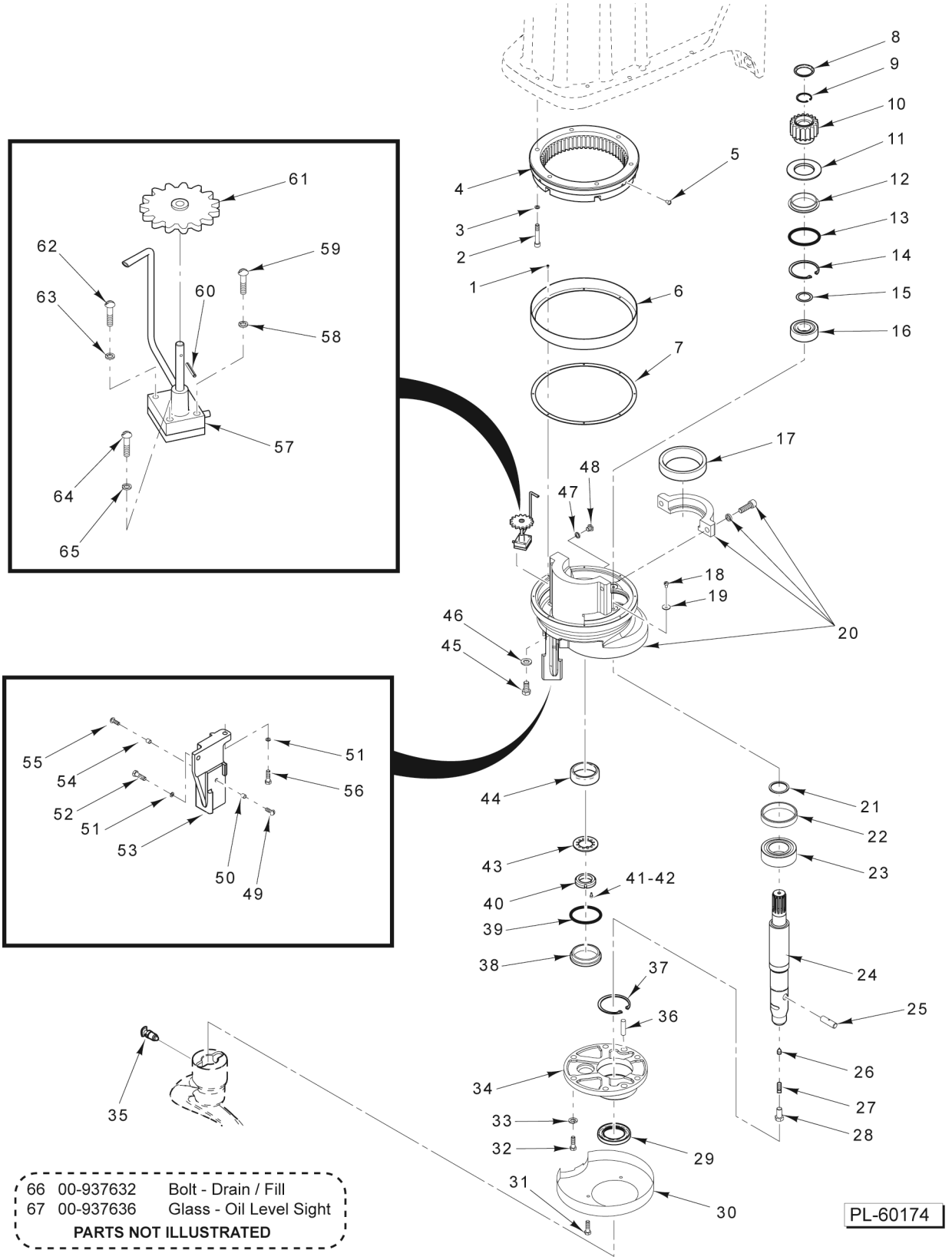

PLANETARY
(HL1400 SERIES)

PLANETARY
(HL1400 SERIES)

ILLUS. PL-60174	PART NO.	NAME OF PART	AMT.
1	SC-009-70	Mach. Screw 6-32 x 1/4 Slotted Rd. Hd.	8
2	SC-040-28	Cap Screw 3/8-16 x 2-1/2 Hex Socket Hd.	6
3	WL-019-92	Lockwasher 3/8 Helical High Collar	6
4	00-438050	Gear - Internal	1
5	SC-021-37	Mach. Screw 1/4-20 x 3/8 Slotted Rd. Hd. (SST)	3
6	00-064478	Extension	1
7	00-064464	Gasket	1
8	00-060071	Cap - Oil Retaining	1
9	RR-006-08	Retaining Ring	1
10	00-067886	Pinion - Internal (18T) (Incls. Item 11)	1
11	00-065372	NLA - Obsolete--Deflector - Oil	1
12	00-073011	Baffle - Planetary Oil	1
13	00-067500-00021	O-Ring	1
14	RR-004-24	Retaining Ring	1
15	00-068277	Shim - Internal Pinion	1
16	BB-021-56	Bearing - Ball	1
17	BR-002-31	Roller Bearing - Cup & Cone Assy	1
18	SC-062-20	Cap Screw 1/4-20 x 3/8 Hex Hd.	2
19	WS-003-46	Washer	2
20	00-874690-00002	Planetary Assy. (Incls. Bearing Cap) (Must Also Order Items 66 & 67)	1
21	00-067902	Spacer - Agitator Shaft	1
22	00-067903	Locator - Bearing	1
23	BB-021-55	Bearing - Ball	1
24	00-916037	Shaft - Agitator	1
25	00-873953	Pin - Agitator Shaft	1
26	00-007744	Set Screw Hdls., Cone Pt.	1
27	SC-047-41	Set Screw 3/8-16 x 3/8 Hex Hdls., Cup Pt.	1
28	00-064723	Plug - Agitator Shaft	1
29	00-068045	Seal - Planetary Oil	1
30	00-874669	Cover - Planetary	1
31	00-080531	Screw - Nylok Hex Hd.	2
32	SC-120-28	Cap Screw 1/2-13 x 2 Hex Hd.	6
33	WL-004-11	Lockwasher 1/2 Helical	6
34	00-067921-00001	Plate - Bearing	1
35	00-874145	Plunger Assy.	1
36	00-011800-00237	Dowel	2
37	RR-006-07	Retaining Ring	1
38	00-437496-00002	Cap - Seal (Painted)	1
39	00-067500-00021	O-Ring	1
40	00-065275	Bearing - Special Lock Nut	1
41	00-065277	Cap Screw Socket Hd.	1
42	WL-003-15	Lockwasher #8 Light	1
43	00-064982	Washer - Tongue	1
44	BR-002-15	Roller Bearing - Cup & Cone Assy	1
45	SC-129-38	Cap Screw 7/16-20 x 1 Hex Hd. (SST)	1
46	WS-021-20	Washer (Nylon)	1
47	WS-021-20	Washer (Nylon)	1
48	00-064465-00001	Plug - Oil Fill	1
49	SC-021-54	Mach. Screw 5/16-18 x 7/8 Slotted Rd. Hd. (SST)	1
50	00-874181	Spacer - Scraper Arm	1
51	WL-006-28	Lockwasher 3/8 Helical (SST)	2
52	SC-041-49	Cap Screw 3/8-16 x 1-3/8 Hex Hd. (SST)	1
53	00-874649-00002	Bracket - Bowl Scraper	1
54	00-874181	Spacer - Scraper Arm	1
55	SC-021-54	Mach. Screw 5/16-18 x 7/8 Slotted Rd. Hd. (SST)	1

PLANETARY
(HL1400 SERIES)

ILLUS. PL-60174	PART NO.	NAME OF PART	AMT.
56	SC-041-31	Cap Screw 3/8-16 x 1-1/4 Hex Hd. (SST)	1
57	00-290232-00002	Pump Assy. - Oil (Incls. Items 58, 59, & 60)	1
58	WL-003-22	Lockwasher #10 Light	1
59	SC-060-87	Mach. Screw 10-32 x 3/4 Slotted Rd. Hd	1
60	RP-002-08	Roll Pin 5/64 Dia. x 11/16 Lg	1
61	00-064614	Gear - Drive Assy	1
62	SC-009-68	Mach. Screw 8-32 x 3/4 Slotted Rd. Hd	1
63	WL-003-15	Lockwasher #8 Light	1
64	SC-081-17	Mach. Screw 10-32 x 1 Slotted Rd. Hd. (SST)	2
65	WL-003-22	Lockwasher #10 Light	2
66	00-937632	Bolt - Drain / Fill (Order with Item 20)	1
67	00-937636	Glass - Oil Level Sight Glass (Order with Item 20)	1

NOTES

20	00-916381-00001	Wire Cage Assy. (ML-141076)
21	00-916299-00001	Wire Cage Assy. (ML-141080)

PARTS NOT ILLUSTRATED

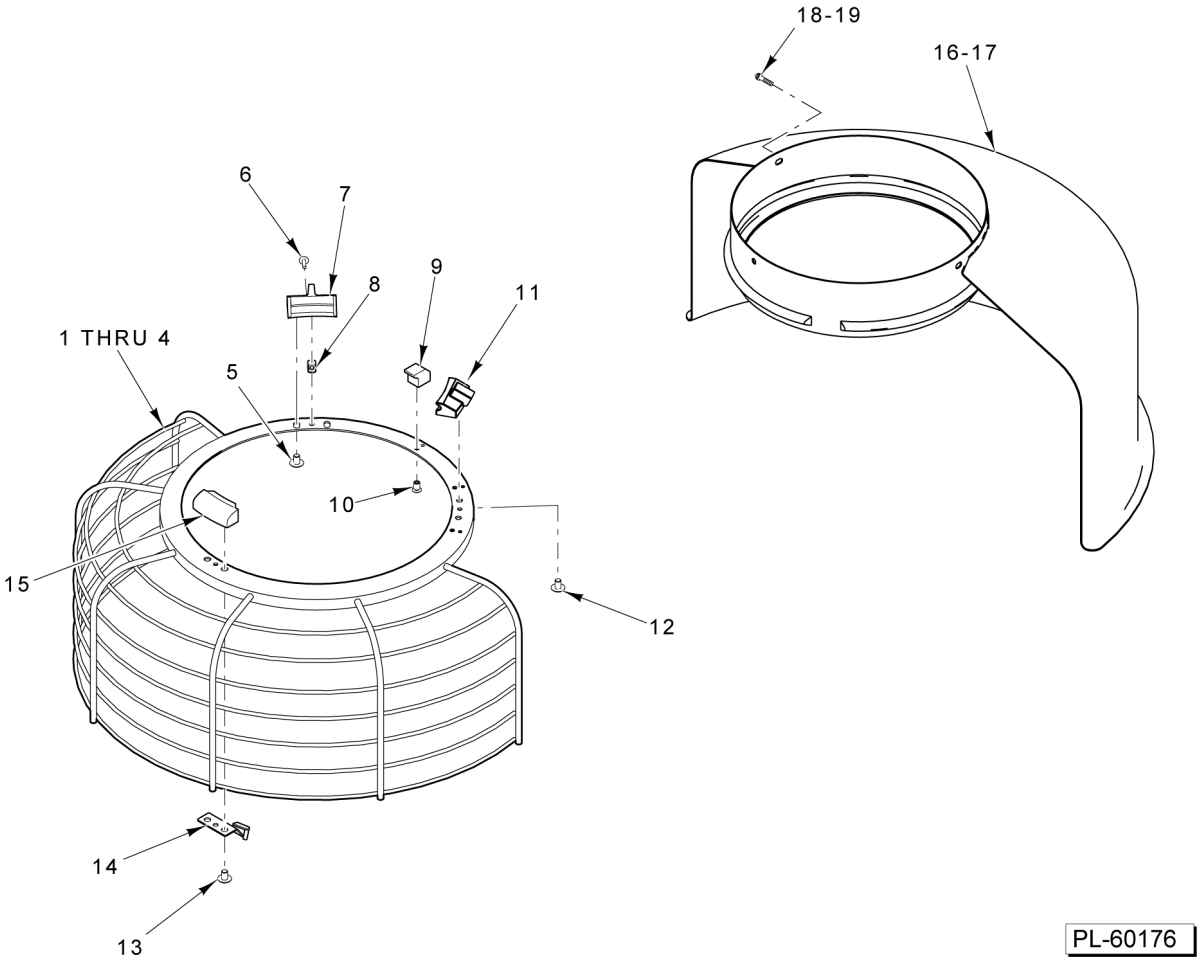

BOWL GUARD

BOWL GUARD

ILLUS. PL-60176	PART NO.	NAME OF PART	AMT.
1	00-916154-00001	Wire Cage Assy. (ML-141075) (Incls. Items 5 thru 15)	1
2	00-916277-00001	Wire Cage Assy. (ML-141079 & ML-141083, & ML-141112) (Incls. Items 5 thru 15)	1
3	00-916489-00001	Wire - Cage Weldment (ML-141076)	1
4	00-916300-00001	Wire - Cage Weldment (ML-141080)	1
5	SC-122-45	Mach. Screw 1/4-20 x 3/8 Slotted Truss Hd	2
6	SC-123-07	Mach. Screw 8-32 x 1/2 Slotted Truss Hd	1
7	00-437433-00003	Shoe - Adjustable	1
8	00-437720	Key - Shoe	1
9	00-438055	Bumper - Cage	1
10	SC-122-44	Mach. Screw 8-32 x 3/8 Slotted Truss Hd	1
11	00-874127	Shoe - Fixed (Incls. magnet) (Incls. Magnet)	1
12	SC-122-45	Mach. Screw 1/4-20 x 3/8 Slotted Truss Hd	2
13	SC-122-45	Mach. Screw 1/4-20 x 3/8 Slotted Truss Hd	2
14	00-875795	Stop - Cage	1
15	00-874126	Shoe - Front	1
16	00-916152	Guard - Splash & Drip (HL800 Series)	1
17	00-874951	Splash Guard & Drip Cup (V1401 Series) (HL1400 Series)	1
18	SC-021-39	Mach. Screw 1/4-20 x 5/8 Slotted Rd. Hd. (SST) (HL800 Series)	3
19	SC-021-37	Mach. Screw 1/4-20 x 3/8 Slotted Rd. Hd. (SST) (HL1400 Series)	3
20	00-916381-00001	Wire Cage Assy. (ML-141076) (Incls. Items 3 & 5 thru 15)	1
21	00-916299-00001	Wire Cage Assy. (ML-141080) (Incls. Items 4 thru 15)	1

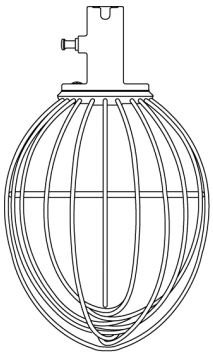

1



2

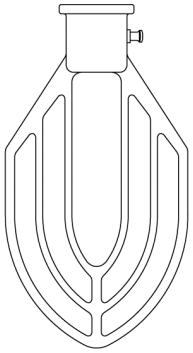

3

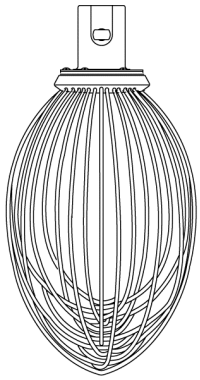

4

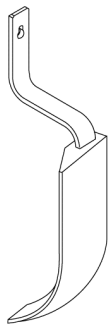

5-6

40-QUART AGITATORS

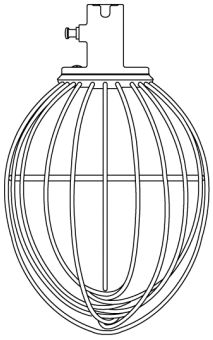

7

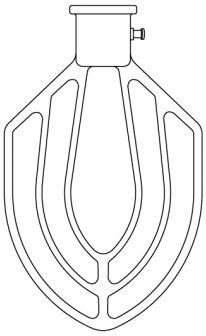

8

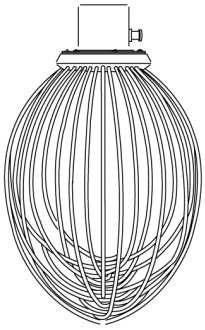

9



10

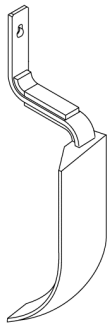

11-12

60-QUART AGITATORS

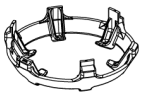

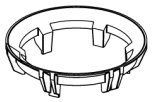

13-14

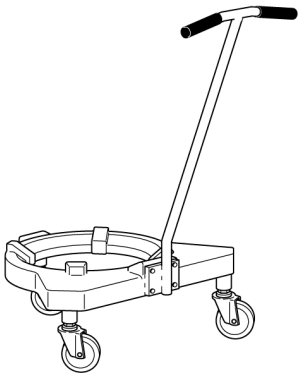

15-16-17

BOWL TRUCK

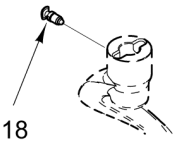

18

19 00-438047 Ingredient Chute (Packaged)
20 00-937389 Bowl Truck (Packaged)

PARTS NOT ILLUSTRATED

PL-60178

AGITATORS AND ACCESSORIES (40 & 60 QUART)

AGITATORS AND ACCESSORIES
(40 & 60 QUART)

ILLUS. PL-60178	PART NO.	NAME OF PART	AMT.
1	00-916321	"I" Wire Whip (40 Quart) (Packaged) (Incls. Item 18)	1
2	00-916316	"ED" Dough Arm (40 Quart) (Packaged) (Incls. Item 18)	1
3	00-916313	"B" Flat Beater (40 Quart) (Packaged) (Incls. Item 18)	1
4	00-916319	"D" Wire Whip (40 Quart) (Packaged) (Incls. Item 18)	1
5	00-874268	Bowl Scraper (40 Quart) (Packaged) (Incls. Item 6)	1
6	00-435637-00004	Scraper - Bowl (40 Qt.)	1
7	00-916268	"I" Wire Whip (60 Quart) (Packaged) (Incls. Item 18)	1
8	00-916257	"B" Flat Beater (60 Quart) (Packaged) (Incls. Item 18)	1
9	00-916265	"D" Wire Whip (60 Quart) (Packaged) (Incls. Item 18)	1
10	00-916260	"ED" Dough Arm (60 Quart) (Packaged) (Incls. Item 18)	1
11	00-874267	Bowl Scraper (60 Quart) (Packaged) (Incls. Item 12)	1
12	00-435637-00001	Scraper - Bowl (60 Qt.)	1
13	00-916493	Bowl Truck Adapter (60-80-140 Quart) (Packaged)	1
14	00-916495	Bowl Truck Adapter (40-60 Quart) (Packaged)	1
15	ML-141087-0000Z	Bowl Truck Assy (60-140 Quart)	1
16	00-874288	Caster (4 In.) (Bowl Truck)	3
17	00-916585	Bowl Truck (Packaged) (HL1400 Series)	1
18	00-874145	Plunger Assy	1
19	00-438047	Ingredient Chute (Packaged)	1
20	00-937389	Bowl Truck	1

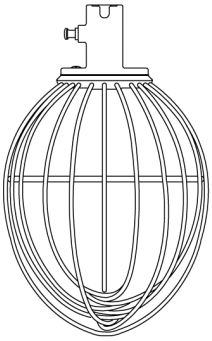

1

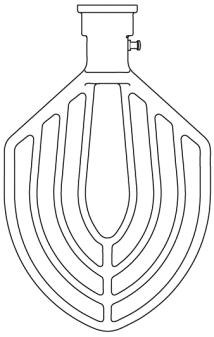

2

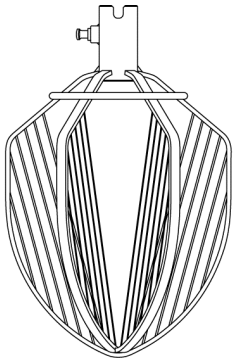

3

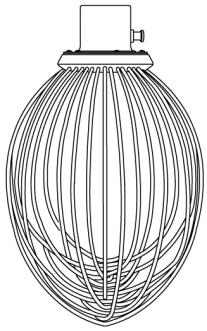

4

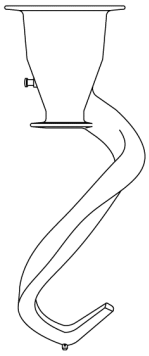

5

80-QUART AGITATORS

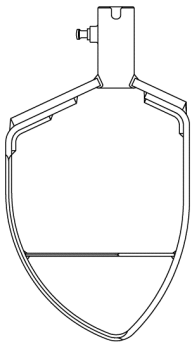

6

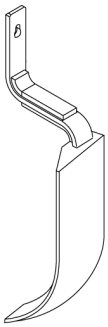

7-8

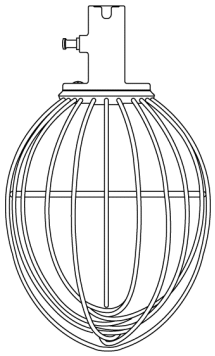

9

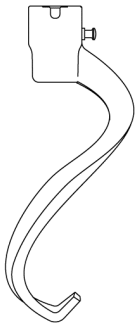

10-11

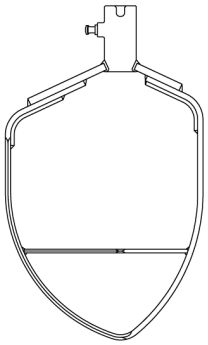

12

140-QUART AGITATORS

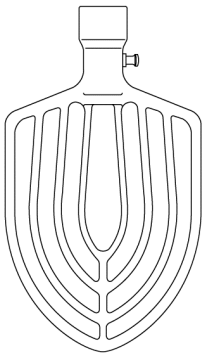

13-14

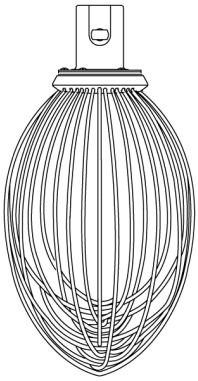

15

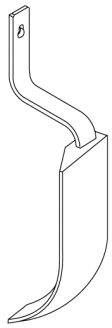

16-17

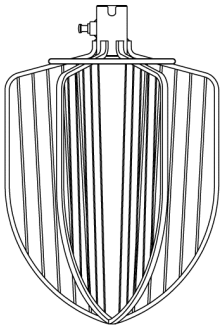

18

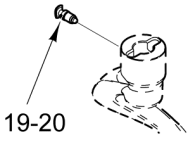

19-20

PL-60179

AGITATORS AND ACCESSORIES
(80 & 140 QUART)

AGITATORS AND ACCESSORIES (80 & 140 QUART)

ILLUS. PL-60179	PART NO.	NAME OF PART	AMT.
1	00-875931	"I" Wire Whip (80 Quart) (Packaged) (Incls. Item 19)	1
2	00-874654	"B" Beater (80 Quart) (Packaged) (Incls. Item 19)	1
3	00-875946	"C" Wire Whip (80 Quart) (Packaged) (Incls. Item 19)	1
4	00-875866	"D" Wire Whip (80 Quart) (Packaged) (Incls. Item 19)	1
5	00-874647	"ED" Dough Arm (80 Quart) (Packaged) (Incls. Item 19)	1
6	00-875914	Pastry Knife (80 Quart) (Packaged) (Incls. Item 19)	1
7	00-874700	Bowl Scraper (80 Quart) (Packaged) (Incls. Item 8)	1
8	00-435637-00002	Scraper - Bowl (80 Qt.)	1
9	00-875929	"I" Wire Whip (140 Quart) (Packaged) (Incls. Item 19)	1
10	00-875847	"ED" Dough Arm (140 Quart) (Packaged) (Incls. Item 19)	1
11	00-916316	"ED" Dough Arm (40 Quart) (Packaged) (Incls. Item 19)	1
12	00-875906	Pastry Knife (140 Quart) (Packaged) (Incls. Item 19)	1
13	00-874409	"B" Flat Beater (Alum.) (140 Quart) (Packaged) (Incls. Item 19)	1
14	00-937382	"B" Flat Beater (SST) (140 Quart) (Packaged) (Incls. Item 20)	1
15	00-875863	"D" Wire Whip (140 Quart) (Packaged) (Incls. Item 19)	1
16	00-874699	Bowl Scraper (140 Quart) (Packaged) (Incls. Item 17)	1
17	00-435637-00003	Scraper - Bowl (140 Quart)	1
18	00-875938	"C" Wire Whip (140 Quart) (Packaged) (Incls. Item 19)	1
19	00-874145	Plunger Assy	1
20	00-937460	Plunger Assy (SST)	1

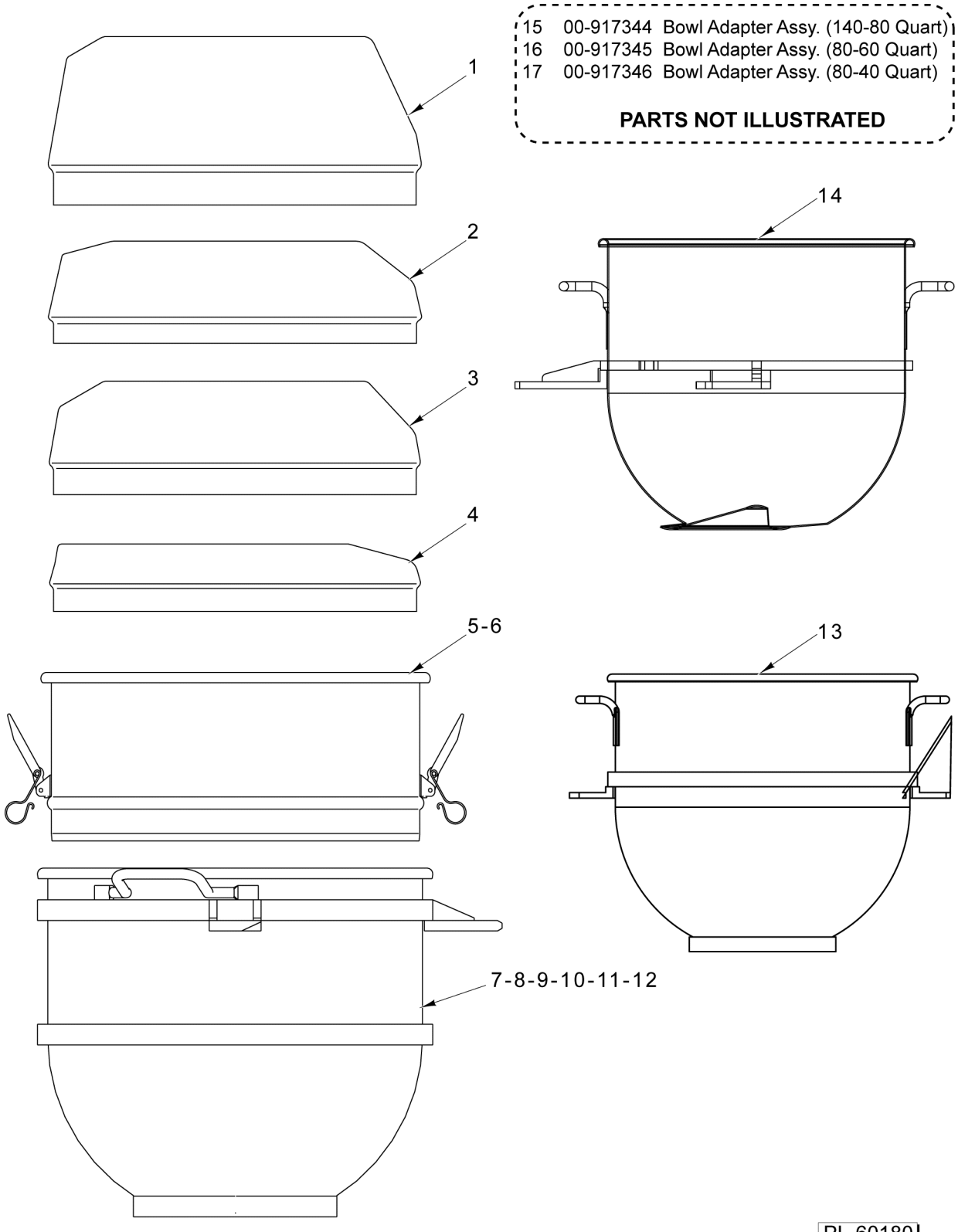

BOWL AND EXTENSIONS

BOWL AND EXTENSIONS

ILLUS. PL-60180	PART NO.	NAME OF PART	AMT.
1	00-438081	Splash Cover (40 Quart) (Packaged)	1
2	00-438082	Splash Cover (60 Quart) (Packaged)	1
3	00-438083	Splash Cover (80 Quart) (Packaged)	1
4	00-438084	Splash Cover (140 Quart) (Packaged)	1
5	00-438104-00004	Bowl Extension Assy. (60 Quart) (Packaged)	1
6	00-438104-00002	Bowl Extension Assy. (80 Quart) (Packaged)	1
7	00-916175	Bowl Assy. (40 Quart) (Packaged) (All HL800 & HL1400 except HL1400N)	1
8	00-916174	Bowl Assy. (60 Quart) (Packaged) (All HL800 & HL1400 except HL1400N)	1
9	00-875846	Bowl Assy. (80 Quart) (Packaged) (All HL800 & HL1400 except HL1400N)	1
10	00-275690	Bowl Assy. (80 Quart) (Costco) (All HL1400N)	1
11	00-875845	Bowl Assy. (140 Quart) (SST) (Packaged) (All HL1400 except HL1400N)	1
12	00-917142	Bowl Assy. (140 Quart) (Costco) (All HL1400N)	1
13	00-937930	Bowl Assy. (80 Quart) (Non-Swing Out) (SST) (ML-141112)	1
14	00-937934	Bowl Assy. (40 Quart) (Non-Swing Out) (SST) (ML-141112)	1
15	00-917344	Bowl Adapter Assy. (140-80 Quart) (Packaged)	1
16	00-917345	NLA - Obsolete--Bowl Adapter Assy. (80-60 Quart) (Packaged)	1
17	00-917346	Bowl Adapter Assy. (80-40 Quart) (Packaged)	1