CATALOG OF REPLACEMENT PARTS



A.) HL600 SERIES LEGACY MIXER (Multi/Mini Drive)

ML-141063	**HL600**
ML-141068	**HL600**
ML-141069	**HL600C**
ML-141070	**HL662**
ML-141104	**HL600 (Canada)**
ML-141105	**HL662 (Canada)**
ML-141142	**HL600**

A product of HOBART 701 S. RIDGE AVENUE TROY, OHIO 45374-0001

FORM 43254 Rev. I (October 2025)

 © HOBART 2025

Table of Contents

5 CONTROL PANEL COVER (ML-141069)
7 CONTROL PANEL
9 ELECTRICAL COMPONENTS
11 ATTACHMENT HUB
13 BASE AND PEDESTAL
15 BOWL SUPPORT
17 TRANSMISSION CASE AND MOTOR
19 TRANSMISSION
21 PLANETARY
23 BOWL GUARD
25 AGITATORS AND ACCESSORIES
27 LABELS & NAMEPLATES

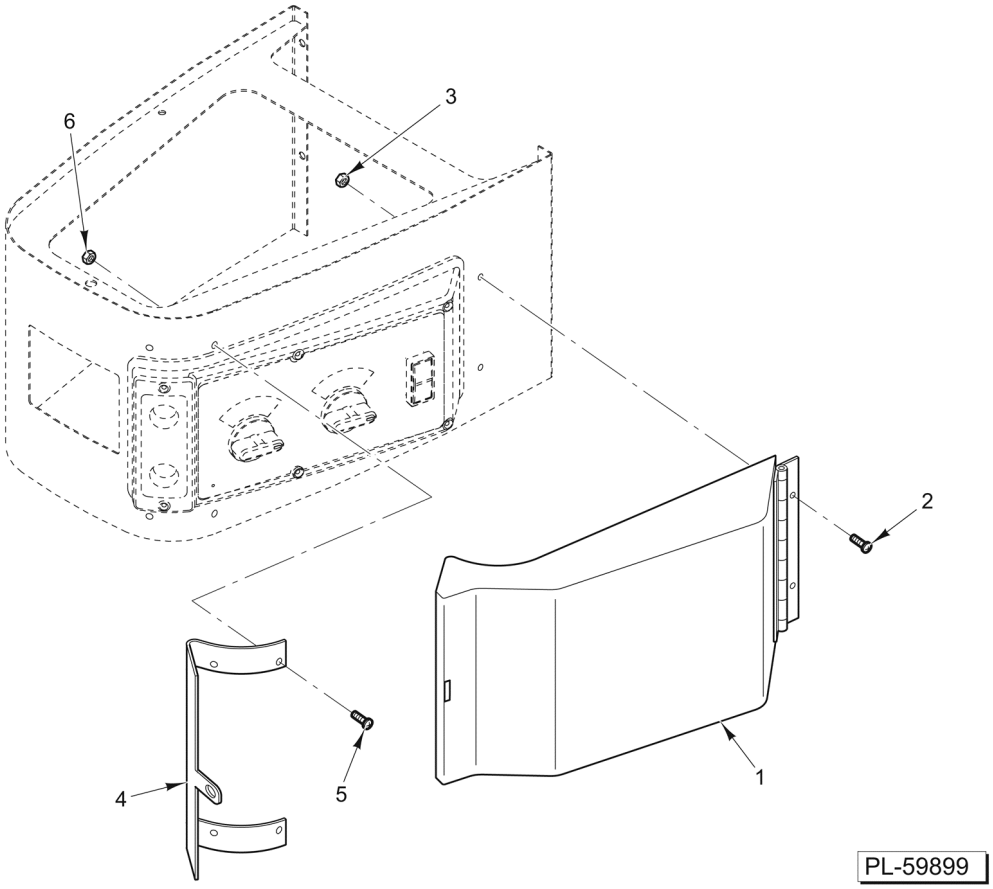

CONTROL PANEL COVER (ML-141069)

CONTROL PANEL COVER (ML-141069)

ILLUS. PL-59899	PART NO.	NAME OF PART	AMT.
1	00-874526	Cover Assy	1
2	SC-128-74	Mach. Screw 1/4-20 x 5/8 Tx. Button Hd. (SST)	2
3	NS-038-04	Lock Nut 1/4-20 Flange	2
4	00-874530	Hasp	1
5	SC-128-74	Mach. Screw 1/4-20 x 5/8 Tx. Button Hd. (SST)	4
6	NS-038-04	Lock Nut 1/4-20 Flange	4

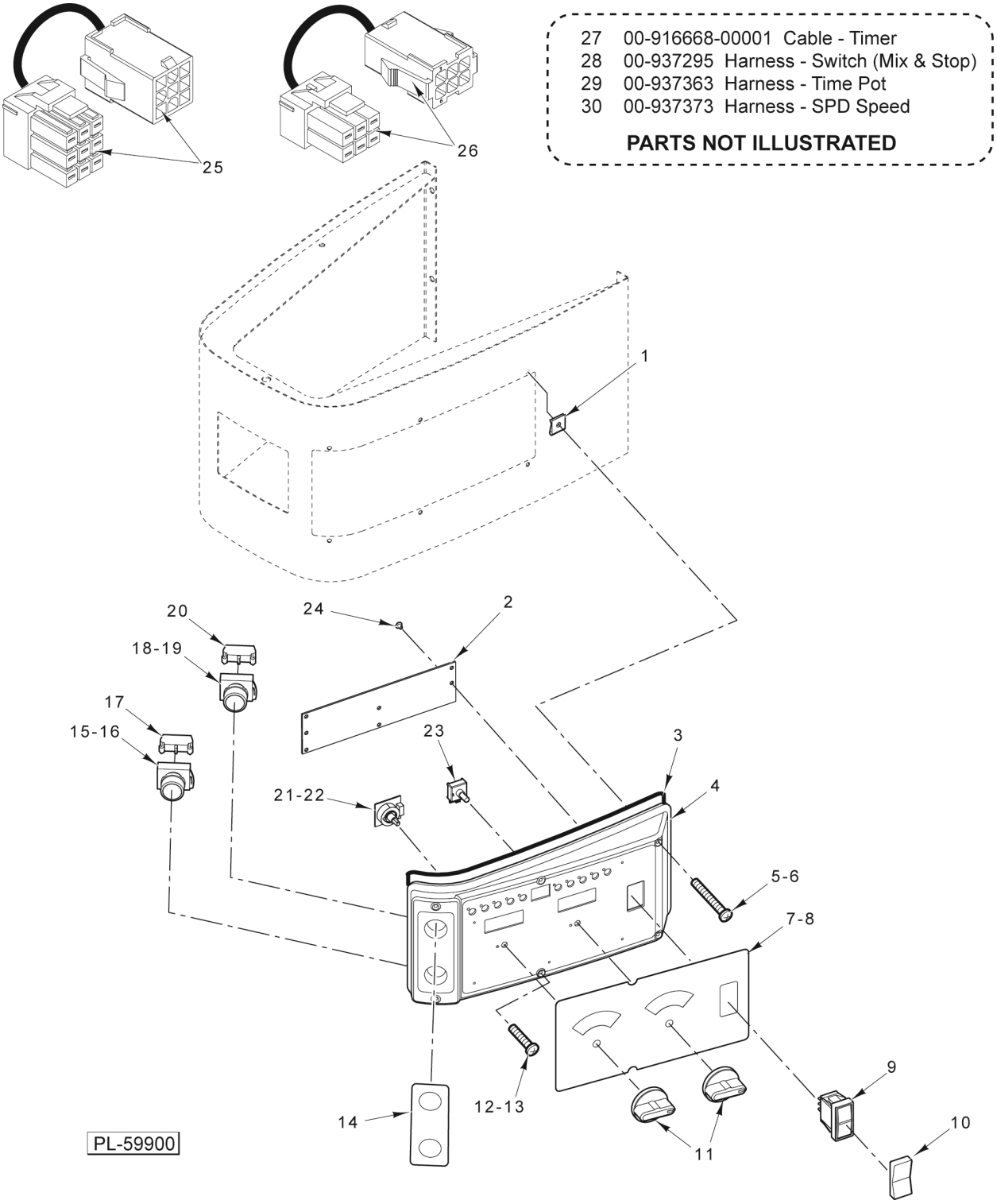

CONTROL PANEL

CONTROL PANEL

ILLUS. PL-59900	PART NO.	NAME OF PART	AMT.
1	00-874338	Fastener - Self-Retaining	6
2	00-937277	PCB Assy. (Standard Timer)	1
3	00-875814	Seal - Control Panel	1
4	00-917220	Panel - Control	1
5	SC-128-40	Mach. Screw 8-32 x 2-1/4 Phil. Oval Hd. (SST)	2
6	00-874468	Extension - Screw (ML-141069)	2
7	00-916231	Overlay (HL600) (Standard Timer) (ML-141063, ML-141068, & ML-141069)	1
8	00-875569	Overlay (HL662) (ML-141070)	1
9	00-087711-330-1	Switch - Rocker (Bowl Lift)	1
10	00-937533	Switch Cover	1
11	00-937364	Knob (Plastic)	2
	00-938683	Knob (Metallic)(Starting S/N: 31-1622206)	2
12	SC-128-39	Mach. Screw 8-32 x 1-1/2 Phil. Oval Hd. (SST)	4
13	SC-128-84	Mach. Screw 8-32 x 1-1/2 Tx. Flat Hd. (SST) (ML-141069)	4
14	00-875451	Label (Mix/Stop)	1
15	00-478752-00008	Switch Assy. (Stop)	1
16	01-650159	Kit, Red Button Overlay (Stop)	1
17	00-087711-322-4	Block - Contact (NC) (Stop)	1
18	00-478752-00001	Switch - Operator (Start)	1
19	00-478753-00001	Cap - Round Push Button (Flush) (Start)	1
20	00-087711-322-3	Block - Contact (Start)	1
21	00-937371	PCB Assy. (Speed Select) (ML-141063, ML-141068, & ML-141069)	1
22	00-937362	PCB Assy. (Speed Select) (ML-141070)	1
23	00-937638	Potentiometer	1
24	SD-039-23	Self-Tapping Screw 6-32 x 1/4 Hex. Hex Washer Hd., Type RL	3
25	00-937622	Harness - Service Adapter FEM 9P	1
26	00-937620	Harness - Service Adapter FEM 6P	1
27	00-916668-00001	Cable - Timer (ML-141068)	1
28	00-937295	Harness - Switch (Mix & Stop)	1
29	00-937363	Harness - Time Pot	1
30	00-937373	Harness - SPD Speed	1

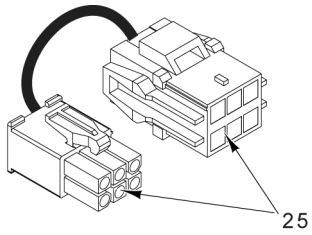

27 Harness - Main (Universal)
28 Harness - Main Power
29 Harness - Interlock Switch
30 Harness - Drive
31 Harness - Fast Stop

PARTS NOT ILLUSTRATED

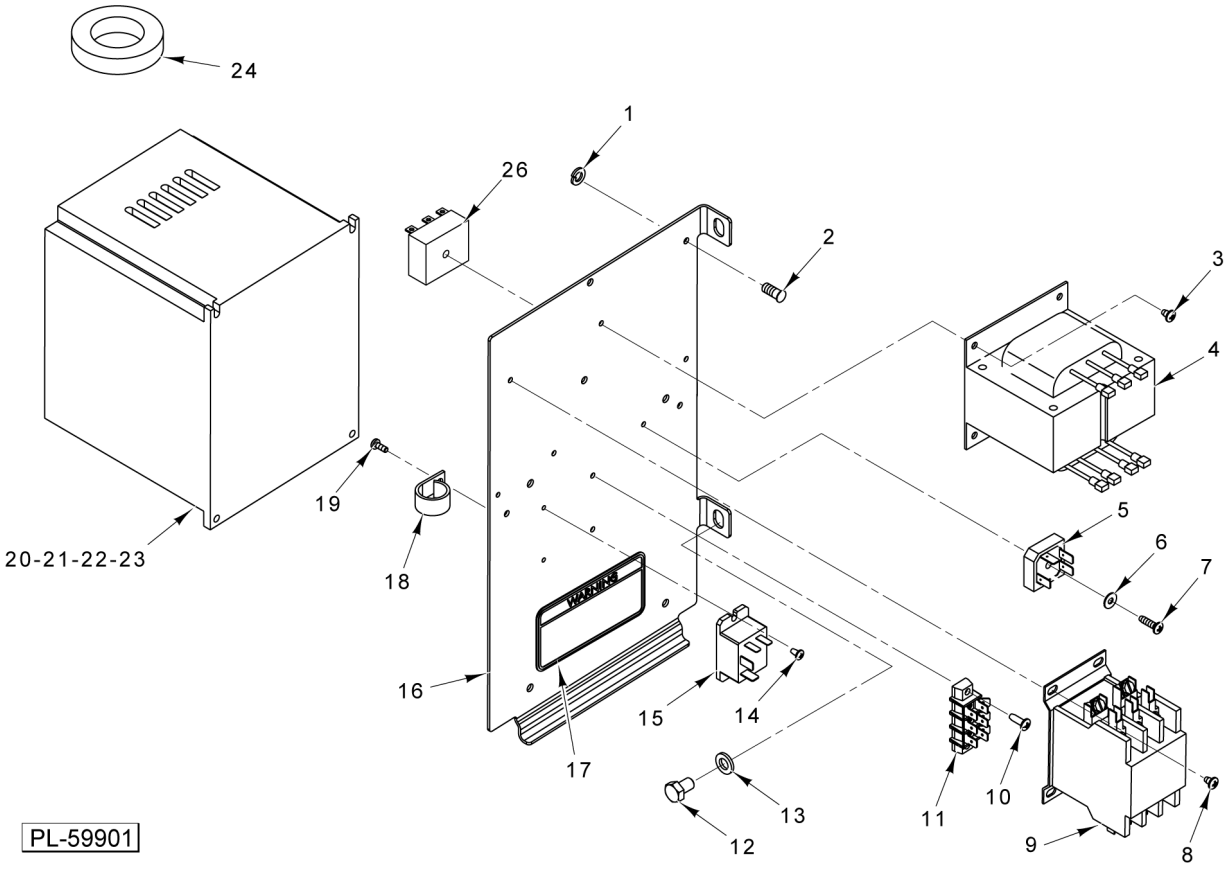

ELECTRICAL COMPONENTS

ELECTRICAL COMPONENTS

ILLUS. PL-59901	PART NO.	NAME OF PART	AMT.
1	WL-007-12	Lockwasher #10 External Shakeproof	4
2	00-113631-00043	Stud - Self-Clinching	4
3	SD-015-39	Self-Tapping Screw 8-32 x 1/4 Phil. Pan Hd., Type TT	2
4	00-294500-050-1	Transformer	1
5	00-042159	Rectifier - Bridge (100 V., 35 Amp.)	1
6	WS-019-41	Washer (SST)	1
7	SD-015-41	Self-Tapping Screw 8-32 x 1/2 Phil. Pan Hd., Type TT	1
8	SD-015-39	Self-Tapping Screw 8-32 x 1/4 Phil. Pan Hd., Type TT	2
9	00-087713-101-3	Contactor (3P, 30 Amp./Aux.)	1
10	SD-015-41	Self-Tapping Screw 8-32 x 1/2 Phil. Pan Hd., Type TT	2
11	00-916269	Block - Terminal	1
12	SC-041-09	Cap Screw 5/16-18 x 1/2 Hex Hd. (SST)	2
13	WL-003-44	Lockwasher 5/16 Helical	2
14	SC-018-37	Mach. Screw 8-32 x 3/4 Phil. Pan Hd	2
15	00-916904-002-1	Relay (1-Pole) (30 Amp.)	1
16	00-937325-00001	Bracket & Label Assy. (Incls. Item 17)	1
17	00-438131-00174	Label - Warning	1
18	00-294677-00002	Clamp - Wire (1/2 I.D.)	2
19	SC-018-37	Mach. Screw 8-32 x 3/4 Phil. Pan Hd	2
20	00-937461	Controller (230 V., 5 Hp.) (Fuji) (HL600)	1
21	00-937462	Controller (460 V., 5 Hp.) (Fuji) (HL600)	1
22	00-937463	Controller (230 V., 5 Hp.) (Fuji) (HL662)	1
23	00-937464	Controller (460 V., 5 Hp.) (Fuji) (HL662)	1
24	00-916185-00001	Ferrite	1
25	00-937619	Harness - Service Adapter Male 6P	1
26	00-916642	Relay - Time Delay (Starting S/N 311681285)	1
27	00-937318	Harness - Main (Universal)	1
28	00-916406-00001	Harness - Main Power	1
29	00-937405	Harness - Interlock Switch	1
30	00-937433	Harness - Drive	1
31	00-940041	Harness - Fast Stop (Starting S/N 311681285)	1

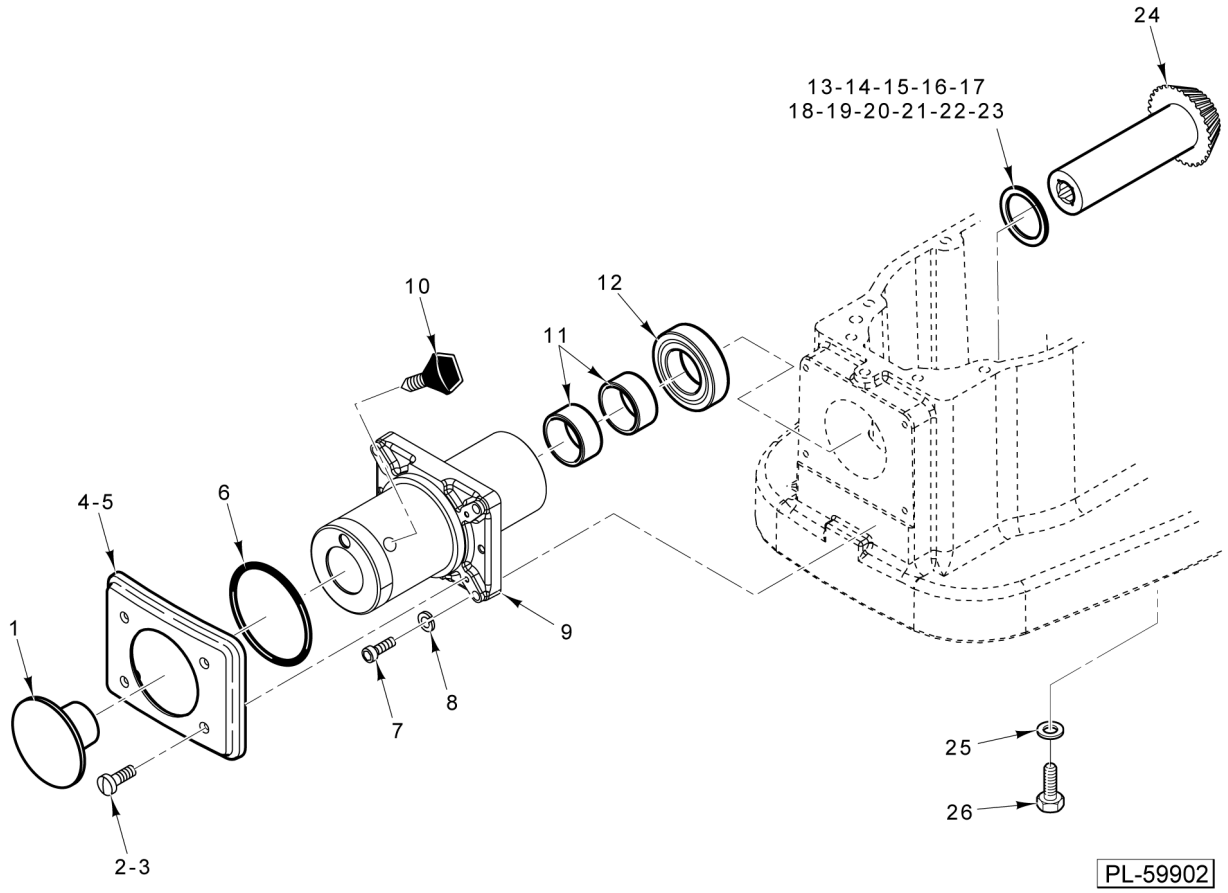

ATTACHMENT HUB

ATTACHMENT HUB

ILLUS. PL-59902	PART NO.	NAME OF PART	AMT.
1	00-917221	Plug - Attachment (Plastic)	1
	00-938670	Plug - Attachment (Metallic)(Starting S/N: 31-1622206)	1
2	SC-079-04	Mach. Screw 8-32 x 3/4 Phil. Oval Hd. (SST)	4
3	SC-128-85	Mach. Screw 8-32 x 3/4 Tx. Flat Hd. (SST) (ML-141069)	4
4	00-917222	Panel - Front	1
5	00-875813	Seal - Front Cover	1
6	OR-001-09	O-Ring	1
7	SD-036-13	Self-Tapping Screw 1/4-20 x 1-1/4 Hex. Hex Washer Hd., Type T	4
8	WL-003-38	Lockwasher 1/4 Helical	4
9	00-940008-00002	Hub - Attachment	1
10	00-108197-00001	Thumb Screw 1-1/4	1
11	BN-002-06	Bearing - Needle	2
12	BB-013-03	Ball Bearing - Nice #618	1
13	00-061920-00001	Washer - Thrust (0.076 Thk.)	AR
14	00-061920-00002	Washer - Thrust (0.079 Thk.)	AR
15	00-061920-00003	Washer - Thrust (0.082 Thk.)	AR
16	00-061920-00004	Washer - Thrust (0.085 Thk.)	AR
17	00-061920-00005	Washer - Thrust (0.088 Thk.)	AR
18	00-061920-00006	Washer - Thrust (0.091 Thk.)	AR
19	00-061920-00007	Washer - Thrust (0.094 Thk.)	AR
20	00-061920-00008	Washer - Thrust (0.097 Thk.)	AR
21	00-061920-00009	Washer - Thrust (0.100 Thk.)	AR
22	00-061920-00010	Washer - Thrust (0.103 Thk.)	AR
23	00-061920-00011	Washer - Thrust (0.106 Thk.)	AR
24	00-874277	Pinion - Bevel (24T)	1
25	WS-021-21	Washer 0.500 x 0.750 x 0.093 (Nylon)	1
26	SC-041-42	Cap Screw 1/2-20 x 1 Hex Hd. (SST)	1

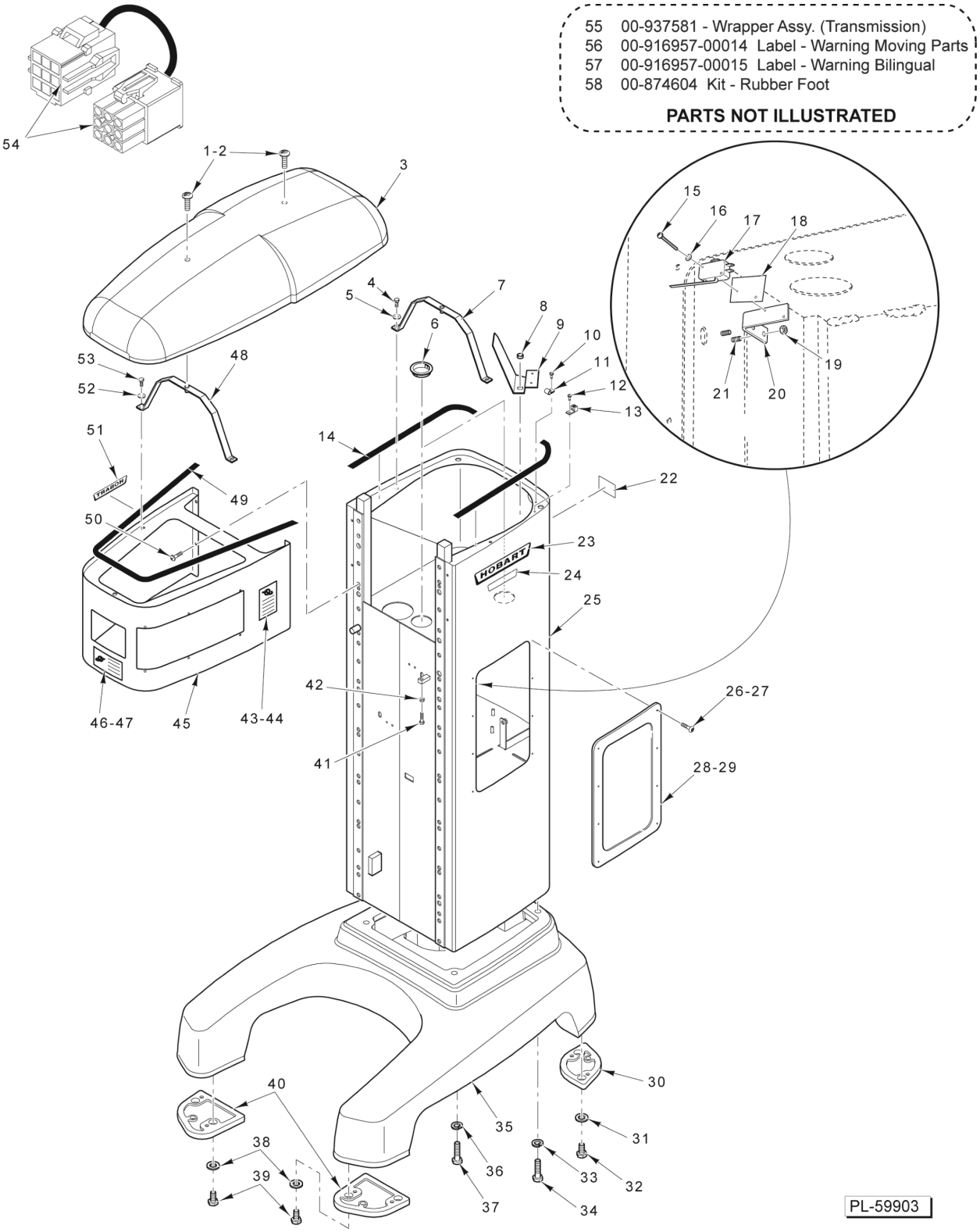

BASE AND PEDESTAL

BASE AND PEDESTAL

ILLUS. PL-59903	PART NO.	NAME OF PART	AMT.
1	SC-120-29	Mach. Screw 1/4-20 x 1 Phil. Oval Hd.	2
2	SC-128-63	Mach. Screw 1/4-20 x 2 Tx. Flat Hd. (ML-141069)	2
3	00-917437	Cover - Top	1
4	SC-036-06	Cap Screw 1/4-20 x 1 Hex Hd.	2
5	WS-003-43	Washer (SST)	2
6	FE-026-28	Bushing - Electric Snap	2
7	00-874222	Rear Strap Assy. - Rear	1
8	FE-021-13	Bushing (Nylon) 1/2 I.D.	1
9	00-916173	Shield - Wire	1
10	SD-029-02	Self-Tapping Screw 10-24 x 1/2 Slotted Pan Hd., Type F	1
11	00-078752-00003	Clamp - Cable	1
12	SD-029-02	Self-Tapping Screw 10-24 x 1/2 Slotted Pan Hd., Type F	1
13	00-118544-00001	Lug - Solderless	1
14	00-874512-00005	Seal - Top Cover	2
15	SC-060-40	Mach. Screw 4-40 x 5/8 Slotted Rd. Hd.	4
16	WL-003-03	Lockwasher #4 Helical	4
17	00-087711-00248	Switch - Bowl Height	2
18	00-439892	Insulator - Switch	2
19	NS-009-30	Nut 10-32 Hex	4
20	00-874109	Bracket - Bowl Travel Switch	2
21	00-113631-00040	Stud - Self-Clinching	4
22	00-438131-061-1	Label - Warning (California)	1
23	00-874401	Logo - Hobart	1
24	00-874379	Label - Legacy	1
25	00-916132-00002	Pedestal, Machining	1
26	SD-009-41	Self-Tapping Screw 8-32 x 3/8 Phil. Pan Hd., Type F (SST)	8
27	SC-128-66	Mach. Screw 8-32 x 3/8 Tx. Button Hd. (ML-141069)	8
28	00-874238-00001	Cover - Side (Incls. Gasket) (Incls. Item 29)	1
29	00-875815	Seal - Side Panel	2
30	00-874585	Foot - Rear	2
31	WS-006-36	Washer	4
32	SC-110-03	Cap Screw 3/8-16 x 3/4 Hex Socket Hd.	4
33	WL-004-11	Lockwasher 1/2 Helical	2
34	SC-062-83	Cap Screw 1/2-13 x 1-1/2 Hex Hd.	2
35	00-873950-002-1	Base	1
36	WL-004-11	Lockwasher 1/2 Helical	6
37	SC-128-47	Cap Screw 1/2-13 x 3 Hex Hd.	6
38	WS-006-36	Washer	4
39	SC-110-03	Cap Screw 3/8-16 x 3/4 Hex Socket Hd.	4
40	00-874152	Foot - Front	2
41	SC-041-13	Cap Screw 5/16-18 x 1 Hex Hd. (SST)	1
42	NS-013-14	Nut 5/16-18 Hex	1
43	00-438131-00001	Plate - Caution (All Except ML-141104 & ML-141105)	1
44	RS-003-04	Rivet	1
45	00-916196	Wrapper Assy. (Transmission) (All Except ML-141104 & ML-141105)	1
46	00-438131-00002	Plate - Warning (All Except ML-141104 & ML-141105)	1
47	RS-003-04	Rivet	1
48	00-874223	Strap Assy. - Front	1
49	00-874512-00002	Seal - Top Cover	1
50	SD-039-06	Self-Tapping Screw 1/4-20 x 3/4 Hex. Hex Washer Hd., Type F	4
51	00-118365	Logo	1
52	WS-003-43	Washer (SST)	2
53	SC-036-06	Cap Screw 1/4-20 x 1 Hex Hd.	2
54	00-937621	Harness - Service Adapter Male 9P	1
55	00-937581	Wrapper Assy. (Transmission) (ML-101104 & ML-141105 Only)	1
56	00-916957-00014	Label - Warning Moving Parts (ML-101104 & ML-141105 Only)	1
57	00-916957-00015	Label - Warning Binlingual (ML-101104 & ML-141105 Only)	1
58	00-874604	Kit - Rubber Foot	1

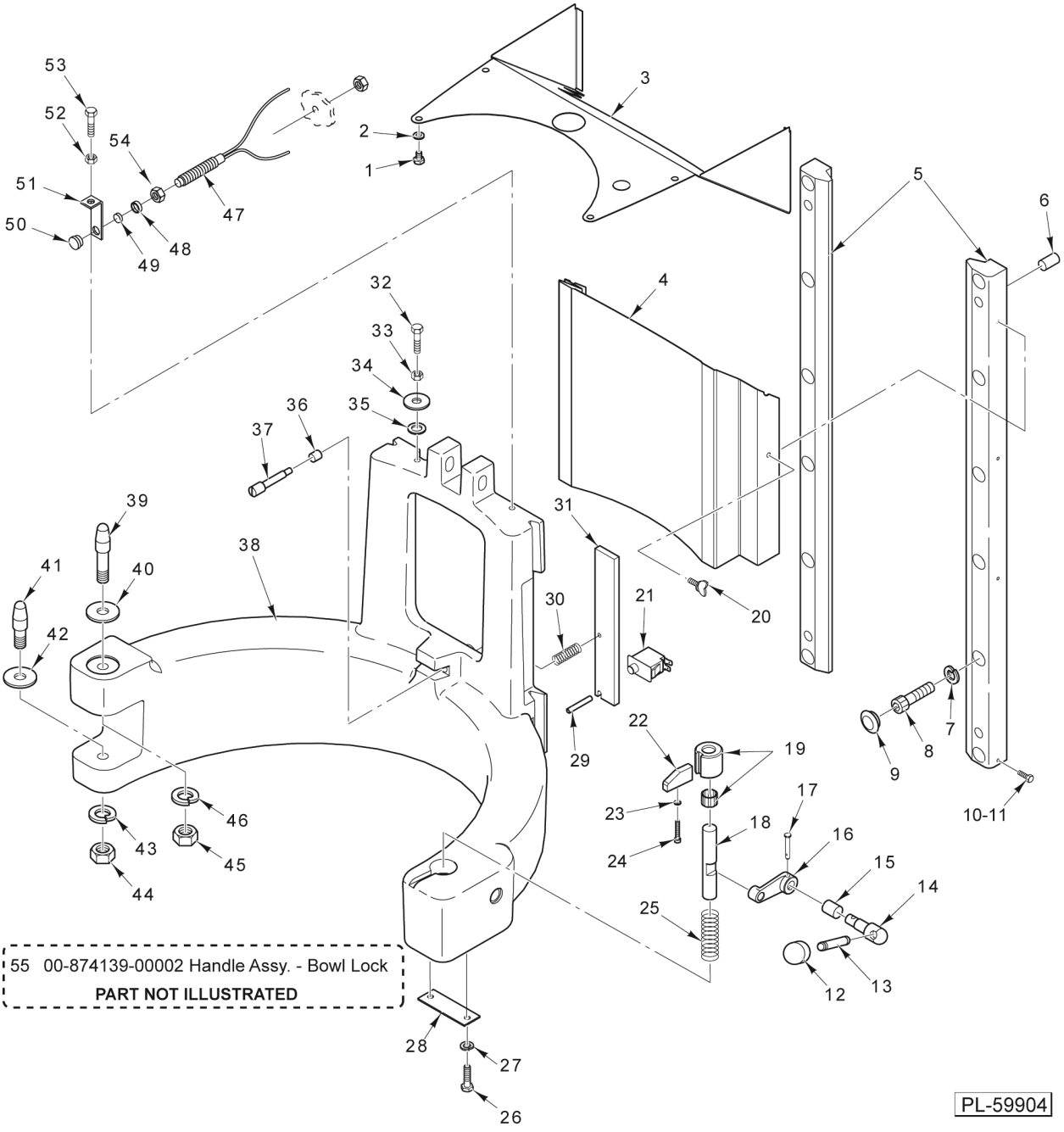

BOWL SUPPORT

BOWL SUPPORT

ILLUS. PL-59904	PART NO.	NAME OF PART	AMT.
1	SC-062-20	Cap Screw 1/4-20 x 3/8 Hex Hd	4
2	WL-003-38	Lockwasher 1/4 Helical	4
3	00-916378	Cover - Upper Apron	1
4	00-916379	Apron - Lower	1
5	00-873885	Slideway	2
6	00-011800-00264	Dowel	2
7	WL-004-02	Lockwasher 3/8 Helical	12
8	SC-092-62	Cap Screw 3/8-16 x 1-1/2 Hex Socket Hd	12
9	PB-004-90	Cap	12
10	SC-128-48	Mach. Screw 10-24 x 1/4 Hex Hd	6
11	SC-128-69	Mach. Screw 10-24 x 3/8 Tx. Button Hd. (ML-141069)	8
12	00-875356	Handle - Lift Lever	1
13	00-874197	Shaft - Bowl Pin Handle	1
14	00-874220	Handle - Bowl Pin	1
15	00-874138	Bushing - Bowl Pin Cam	1
16	00-874218	Clevis - Bowl Lock	1
17	00-874388	Detent - Clevis Pin	1
18	00-874219	Pin - Bowl (RH)	1
19	00-937705	Button - Bowl Lock & Bushing Assy	1
20	00-070641-00009	Thumb Screw (All Except ML-141069)	2
21	00-087711-00338	Switch - Panel Front	1
22	00-874113	Ramp - Wear	1
23	WL-003-12	Lockwasher #8 Helical	1
24	SC-040-92	Cap Screw 8-32 x 1 Hex Socket Hd	1
25	00-874198	Spring - Bowl Pin	1
26	SC-036-14	Cap Screw 1/4-20 x 1/2 Hex Hd	2
27	WL-003-38	Lockwasher 1/4 Helical	2
28	00-874199	Strap - Spring Retaining	1
29	RP-005-12	Roll Pin 0.187 x 1.250 Lg	1
30	00-874496	Spring - Pushplate	1
31	00-874464	Plate - Push	1
32	SC-041-13	Cap Screw 5/16-18 x 1 Hex Hd. (SST)	1
33	NS-013-14	Nut 5/16-18 Hex	1
34	WS-005-33	Washer (SST)	1
35	WS-006-36	Washer	3
36	00-874492	Bushing - Bowl-In	1
37	00-874458	Plunger - Bowl-In	1
38	00-873844-00003	Yoke	1
39	00-873845	Pin - Bowl	1
40	00-874084	Bushing - Bowl Support	1
41	00-873846	Pin - Bowl	1
42	00-874084	Bushing - Bowl Support	1
43	WL-004-12	Lockwasher 1/2 Helical	1
44	NS-013-30	Nut 1/2-13 Hex	1
45	NS-013-30	Nut 1/2-13 Hex	1
46	WL-004-12	Lockwasher 1/2 Helical	1
47	00-087711-00352	Switch - Reed (Also order Item 54)	1
48	00-917357	Holder - Magnet (Upper)	1
49	00-874875	Magnet - Disc	1
50	00-917358	Holder - Magnet (Lower)	1
51	00-916079	Bracket - Magnet	1
52	NS-013-14	Nut 5/16-18 Hex	1
53	SC-041-13	Cap Screw 5/16-18 x 1 Hex Hd. (SST)	1
54	NS-049-36	Nut, M8 X 1.25 SST Thin	AR
55	00-874139-00002	Handle Assy. - Bowl Lock (Welded) (ML-141069)	1

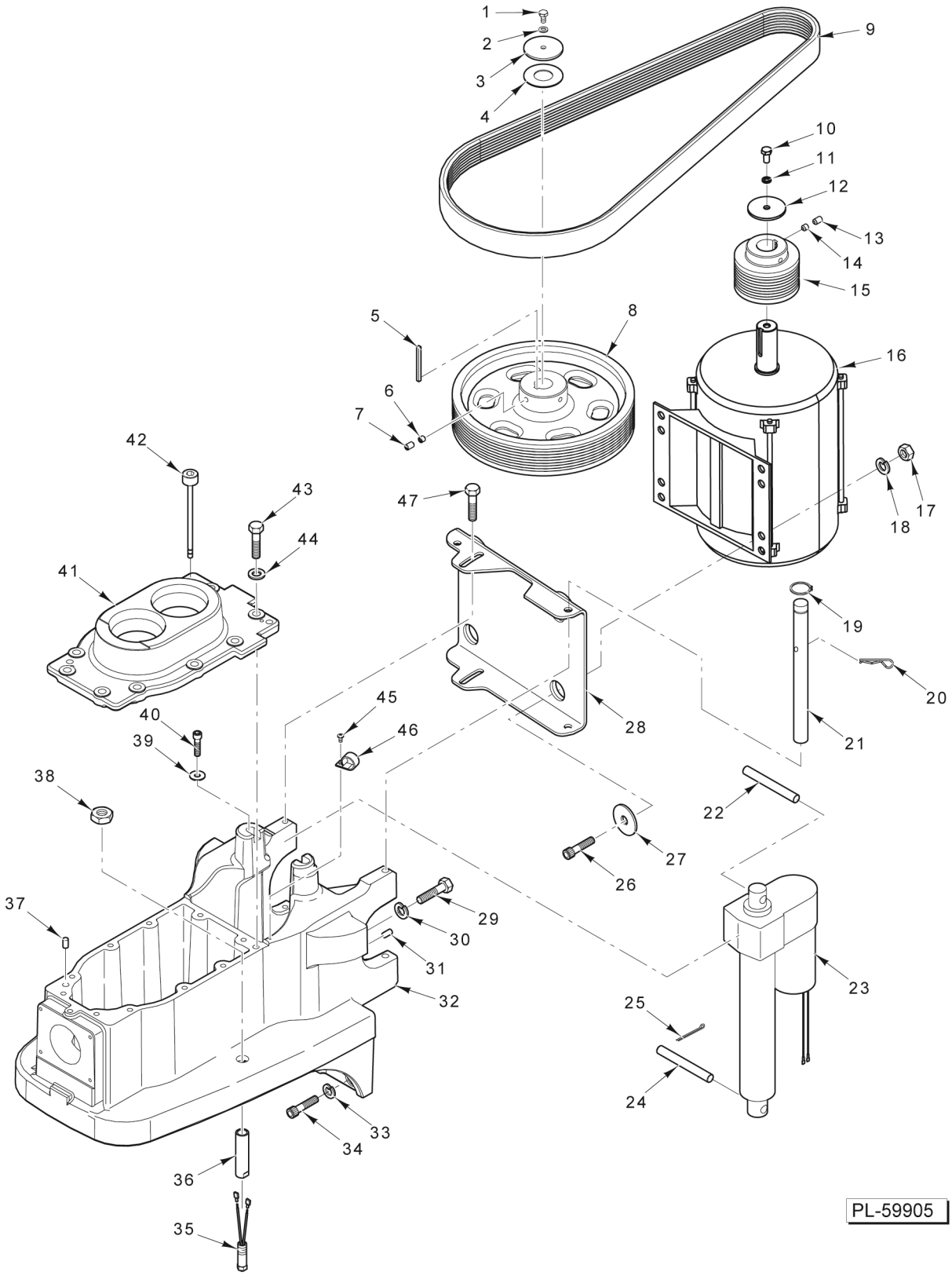

TRANSMISSION CASE AND MOTOR

TRANSMISSION CASE AND MOTOR

ILLUS. PL-59905	PART NO.	NAME OF PART	AMT.
1	SC-036-14	Cap Screw 1/4-20 x 1/2 Hex Hd	1
	SC-121-72	Mach. Screw 1/4-20 x 1/2 Tx. Button Hd. (SST) (ML-141069)	1
2	WL-003-38	Lockwasher 1/4 Helical	1
3	00-874345-00003	Washer - Special	1
4	00-874345-00004	Washer - Special	1
5	00-012430-00177	Key 1/4 x 1/4 x 2-1/2	1
6	SC-047-31	Set Screw 5/16-18 x 5/16 Hex Hdls., Cup Pt	2
7	SC-047-34	Set Screw 5/16-18 x 1/2 Hex Hdls., Cup Pt	2
8	00-874000	Sheave - Driven	1
9	00-873921-00002	Belt	1
10	SC-118-69	Cap Screw M8 x 1.25 x 16mm Socket Fil. Hd	1
11	WL-020-13	Lockwasher M8 Helical	1
12	00-874345-00006	Washer (Special)	1
13	SC-047-34	Set Screw 5/16-18 x 1/2 Hex Hdls., Cup Pt	2
14	SC-047-31	Set Screw 5/16-18 x 5/16 Hex Hdls., Cup Pt	2
15	00-873999	Sheave - Drive	1
	00-012430-00163	Key 1/4 x 1/4 x 1 3/4	1
16	00-917676	Motor - 3 Hp	1
17	NS-013-22	Nut 3/8-16 Hex	4
18	WL-004-06	Lockwasher 3/8 Helical	4
19	RR-004-19	Retaining Ring	2
20	00-938892	Pin, Hairpin Cotter (.091 x 2)	1
21	00-874241	Pin - Pivot Motor Bracket	1
22	00-874315	Pin - Actuator (Upper)	1
23	00-874057	Actuator (Bowl Lift)	1
24	00-874117	Pin - Clevis	1
25	PC-003-50	Cotter Pin 7/64 x 1 Lg	1
26	SC-040-23	Cap Screw 3/8-16 x 1-1/4 Hex Socket Hd	4
27	WS-006-36	Washer	4
28	00-916331	Plate - Mounting	1
29	SC-062-67	Cap Screw 1/2-13 x 2-1/4 Hex Hd	2
30	WL-004-11	Lockwasher 1/2 Helical	2
31	00-011800-00221	Dowel	2
32	00-873996-00003	Case - Transmission	1
33	WL-004-11	Lockwasher 1/2 Helical	2
34	SC-040-36	Cap Screw 1/2-13 x 1-3/4 Hex Socket Hd	2
35	00-874958-00004	Switch - Reed & Extension	1
36	00-874128	Extension - Bowl Guard Switch (Bowl Guard)	1
37	00-011800-00224	Dowel	2
38	NS-017-46	Jam Nut 3/4-10 Hex	1
39	WS-006-36	Washer	2
40	SC-040-16	Cap Screw 5/16-18 x 1 Hex Socket Hd	2
41	00-873916-00002	Cover - Transmission	1
42	00-874131	Dipstick	1
43	SC-062-48	Cap Screw 3/8-16 x 1-1/8 Hex Hd	10
44	WL-004-04	Lockwasher 3/8 Helical	10
45	SC-018-62	Mach. Screw 10-24 x 3/8 Phil. Pan Hd	1
46	00-294677-00003	Clamp - Wire (3/4 I.D.)	1
47	SC-123-50	Cap Screw 3/8-16 x 1 Hex Washer Hd	2

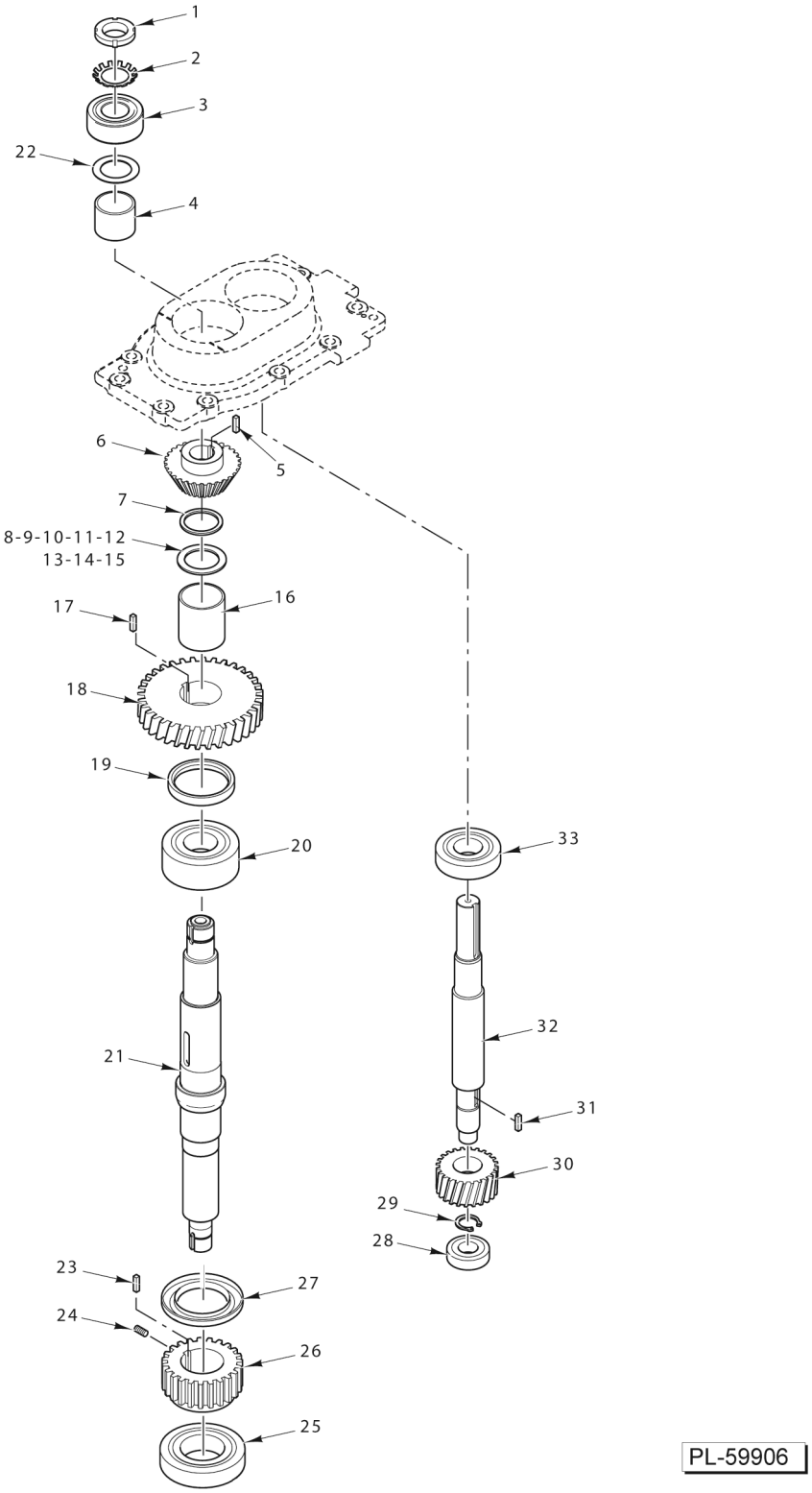

TRANSMISSION

TRANSMISSION

ILLUS. PL-59906	PART NO.	NAME OF PART	AMT.
1	NS-034-07	Lock Nut N.D. #N-06	1
2	WL-017-07	Lockwasher - Bearing Lock Nut	1
3	BB-021-35	Ball Bearing (SKF-5206 A-2RS/C3/HT51)	1
4	00-874293	Spacer (1.505 I.D.)	1
5	00-875419-00071	Key 5/16 x 5/16 x 1-5/8	1
6	00-874282	Gear - Bevel (30T)	1
7	00-874384	Spacer - Gear	1
8	00-874283-00001	Shim - Gear (0.066 Thk.)	AR
9	00-874283-00002	Shim - Gear (0.072 Thk.)	AR
10	00-874283-00004	Shim - Gear (0.084 Thk.)	AR
11	00-874283-00005	Shim - Gear (0.090 Thk.)	AR
12	00-874283-00006	Shim - Gear (0.096 Thk.)	AR
13	00-874283-00007	Shim - Gear (0.102 Thk.)	AR
14	00-874283-00008	Shim - Gear (0.108 Thk.)	AR
15	00-874283-00009	Shim - Gear (0.116 Thk.)	AR
16	00-874294	Spacer (1.755 I.D.)	1
17	00-875419-00075	Key 5/16 x 5/16 x 1-1/16	1
18	00-873914	Gear - Drive	1
19	00-873922	Spacer - Planetary Shaft	1
20	BB-009-30	Ball Bearing - SKF #5209	1
21	00-875915	Shaft - Planetary	1
22	00-875909	Spacer	1
23	00-875419-00075	Key 5/16 x 5/16 x 1-1/16	1
24	SC-047-12	Set Screw 1/4-20 x 3/8 Hex Hdls., Knife Cup Pt	1
25	BB-021-58	Ball Bearing	1
26	00-873912	Gear - Sun	1
27	00-873939	Seal	1
28	BB-007-14	Ball Bearing - MRC #204S	1
29	RR-009-07	Retaining Ring	1
30	00-873915	Gear - Pinion	1
31	00-012430-00048	Key 3/16 Sq. x 3/4 Lg	1
32	00-873913	Shaft - Input	1
33	BB-006-36	Ball Bearing	1
	00-937065	Seal - Oil	1

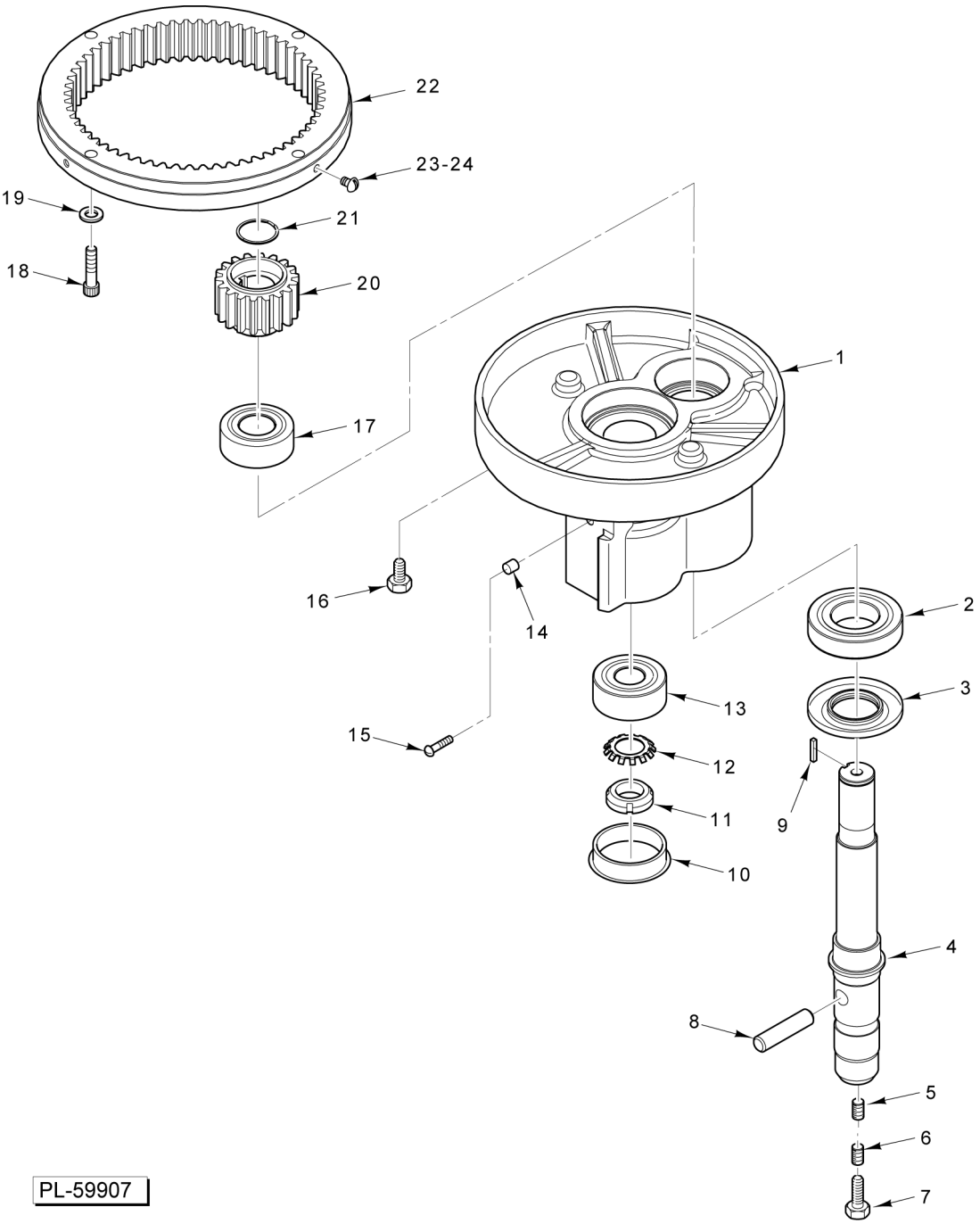

PLANETARY

PLANETARY

ILLUS. PL-59907	PART NO.	NAME OF PART	AMT.
1	00-939074	Planetary Subassembly (Aluminum) (Incls. Items 1 thru 13, 16, 17, 20, & 21)	1
2	BB-007-01	Ball Bearing - SKF #6208Z	1
3	00-292288	Seal	1
4	00-873923	Shaft - Agitator	1
5	00-007744	Set Screw Hdls., Cone Pt.	1
6	SC-047-41	Set Screw 3/8-16 x 3/8 Hex Hdls., Cup Pt.	1
7	00-064723	Plug - Agitator Shaft	1
8	00-873953	Pin - Agitator Shaft	1
9	00-012430-00154	Key 1/4 x 1/4 x 1-3/8	1
10	00-874291	Plug - Planetary (Plastic)	1
11	NS-034-06	Lock Nut N.D. #N-05	1
12	WL-012-06	Lockwasher N.D. #W-05	1
13	BB-021-52	Ball Bearing	1
14	00-874181	OBS. Order Item 15	1
*15	00-938833	Screw, Scraper Mount	1
16	SC-041-26	Cap Screw 3/8-16 x 1/2 Hex Hd. (SST)	2
17	BB-021-35	Ball Bearing	1
18	SC-040-23	Cap Screw 3/8-16 x 1-1/4 Hex Socket Hd	4
19	WL-019-92	Lockwasher 3/8 Helical High Collar	4
20	00-024270	Pinion - Internal (18T)	1
21	RR-005-08	Retaining Ring	1
22	00-437692	Gear - Internal	1
23	SC-021-37	Mach. Screw 1/4-20 x 3/8 Slotted Rd. Hd. (SST)	3
24	SC-128-80	Mach. Screw 1/4-20 x 3/8 Tx. Button Hd. (SST) (ML-141069)	3

* Only used on Cast Iron Planetary

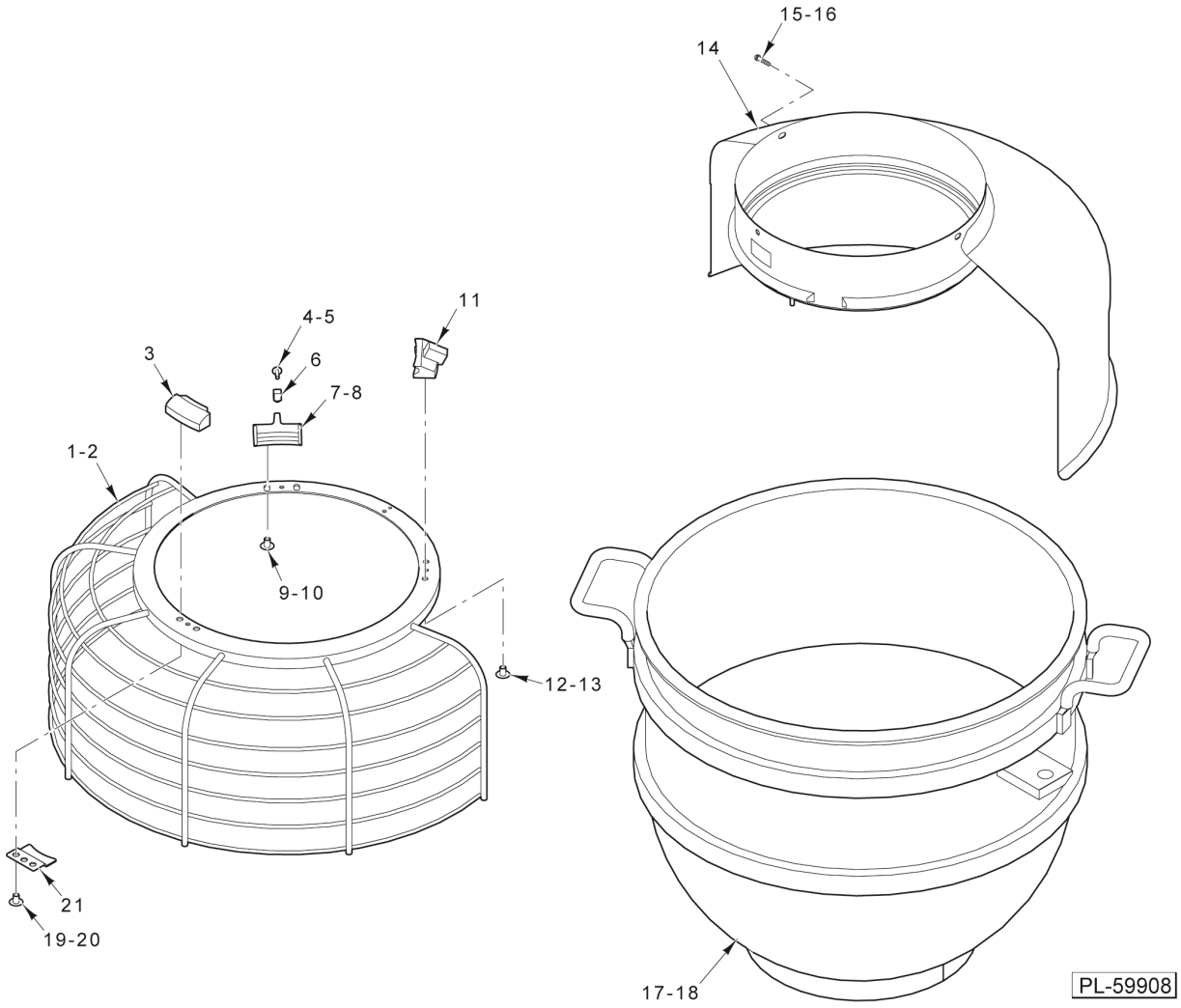

BOWL GUARD

BOWL GUARD

ILLUS. PL-59908	PART NO.	NAME OF PART	AMT.
1	00-874124	Wire Cage	1
2	00-874124-00002	Wire Cage (ML-141069)	1
3	00-874126	Shoe - Front	1
4	SC-123-07	Mach. Screw 8-32 x 1/2 Slotted Truss Hd	1
5	SC-128-66	Mach. Screw 8-32 x 3/8 Tx. Button Hd. (ML-141069)	1
6	00-437720	Key - Shoe	1
7	00-437433-00002	Shoe - Fixed (All except ML-141069)	1
8	00-437433-00003	Shoe - Adjustable (ML-141069)	1
9	SC-122-45	Mach. Screw 1/4-20 x 3/8 Slotted Truss Hd	2
10	SC-128-65	Mach. Screw 1/4-20 x 1/2 Tx. Button Hd. (SST) (ML-141069)	2
11	00-874127	Shoe - Fixed (Incls. magnet)	1
12	SC-122-45	Mach. Screw 1/4-20 x 3/8 Slotted Truss Hd	2
13	SC-132-96	SCREW,MACH,SF 1/4-20 X 3/8 PIN-N-TORX W/PLASTIC LOCKING PATCH (ML-141069)	2
14	00-874123	Guard - Splash & Drip	1
15	SC-133-47	SCREW,CAP 1/4-20 X 3/8 with NYLON PATCH	3
16	SC-132-96	SCREW,MACH,SF 1/4-20 X 3/8 PIN-N-TORX W/PLASTIC LOCKING PATCH (ML-141069)	3
17	00-875603	Bowl Assy. (60 Quart) (Packaged)	1
18	00-875604	Bowl Assy. (40 Quart) (Packaged) (Not Shown)	1
19	SC-122-45	Mach. Screw 1/4-20 x 3/8 Slotted Truss Hd	2
20	SC-132-96	SCREW,MACH,SF 1/4-20 X 3/8 PIN-N-TORX W/PLASTIC LOCKING PATCH (ML-141069)	2
21	00-874168	Stop - Cage	1
	00-512987	Adhesive (Loctite #222, Purple) (ML-141069)	AR
	00-916004	Wire Cage Assy. (Incls. Items 1, 3, 4, 6, 7, 9, 11, 12, 19, & 21)	1
	00-916004-00002	Wire Cage Assy. - Security (Incls. Items 2, 3, 5, 6, 8, 10, 11, 12, 20, 21, & Adhesive) (ML-141069)	AR
	00-438824	Ingredient Chute (Packaged)	1

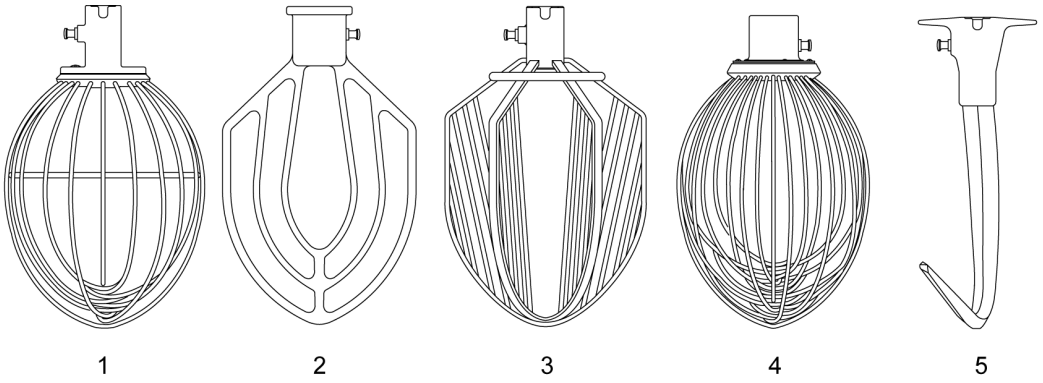

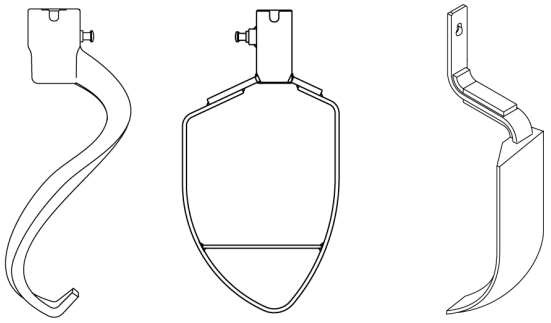

60-QUART AGITATORS

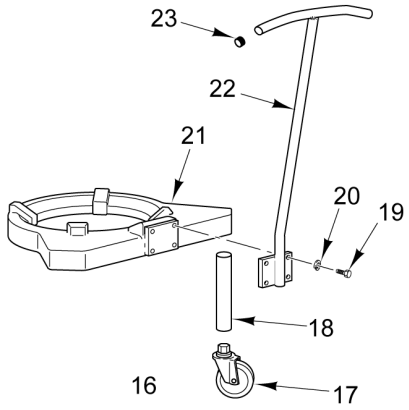

BOWL TRUCK

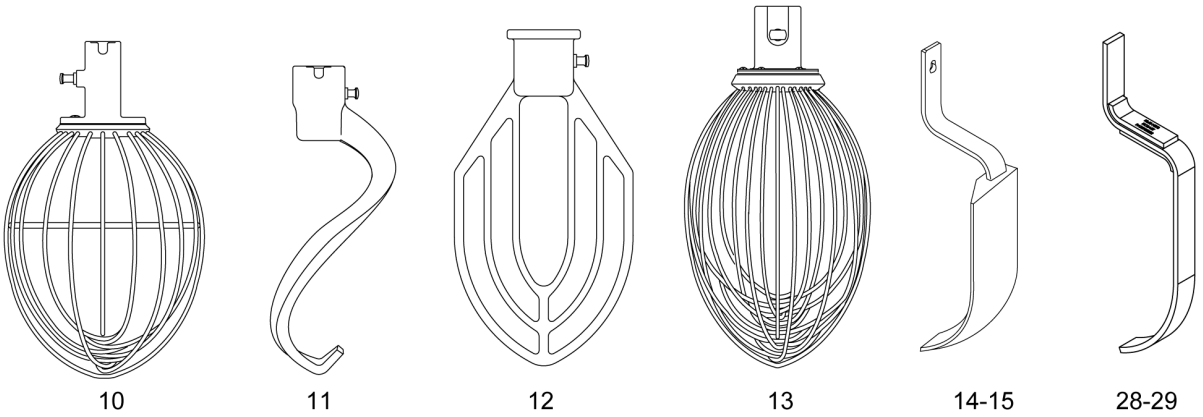

40-QUART AGITATORS

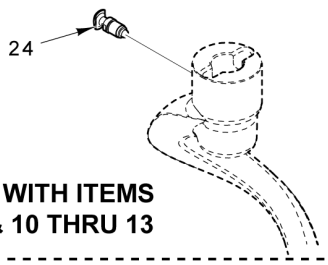

INCLUDED WITH ITEMS 1 THRU 7 & 10 THRU 13

25 Bowl Extension Assy.
26 Splash Cover
27 Splash Cover

PARTS NOT ILLUSTRATED

PL-59909

AGITATORS AND ACCESSORIES

AGITATORS AND ACCESSORIES

ILLUS. PL-59909	PART NO.	NAME OF PART	AMT.
1	00-874271	"I" Wire Whip (60 Quart) (Packaged)	1
2	00-874172	"B" Flat Beater (60 Quart) (Packaged)	1
3	00-874278	"C" Six Wing Whip (60 Quart) (Packaged)	1
4	00-874190	"D" Wire Whip (60 Quart) (Packaged)	1
5	00-874284	"E" Dough Arm (60 Quart) (Packaged)	1
6	00-874285	"ED" Dough Arm (60 Quart) (Packaged)	1
7	00-874286	"P" Pastry Knife (60 Quart) (Packaged)	1
8	00-874267	Bowl Scraper (60 Quart) (Packaged) (Incls. Item 9)	1
9	00-435637-00001	Scraper - Bowl (60 Qt.)	1
10	00-874250	"I" Wire Whip (40 Quart) (Packaged)	1
11	00-874292	"ED" Dough Arm (40 Quart) (Packaged)	1
12	00-874248	"B" Flat Beater (40 Quart) (Packaged)	1
13	00-874249	"D" Wire Whip (40 Quart) (Packaged)	1
14	00-874268	Bowl Scraper (40 Quart) (Packaged) (Incls. Item 15)	1
15	00-435637-00004	Scraper - Bowl (40 Qt.)	1
16	00-874203	Bowl Truck (Packaged) (Incls. Items 17 thru 23)	1
17	00-874288	Caster (4 In.)	3
18	00-874287	Leg	3
19	SC-041-02	Cap Screw 1/4-20 x 1 Hex Hd. (SST)	4
20	WL-006-17	Lockwasher 1/4 Helical (SST)	4
21	00-874110-00002	Truck - Bowl	1
22	00-874360	Handle (With Plate)	1
23	00-873322	Grip - Bowl Truck	2
24	00-874145	Plunger Assy. (Included W/ Items 1 thru 7, & 10 thru 13)	1
25	00-438104-00004	Bowl Extension Assy. (60 Quart) (Packaged)	1
26	00-438082	Splash Cover (60 Quart) (Packaged)	1
27	00-438081	Splash Cover (40 Quart) (Packaged)	1
28	00-939070	Scraper - Bowl (60 Quart) (Use with Aluminum Planetary)	1
29	00-939071	Scraper - Bowl (40 Quart) (Use with Aluminum Planetary)	1

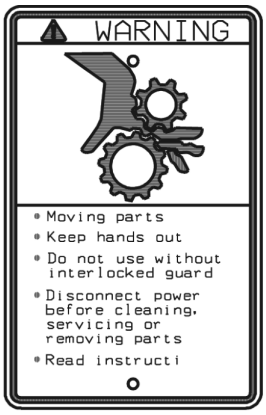

1



2

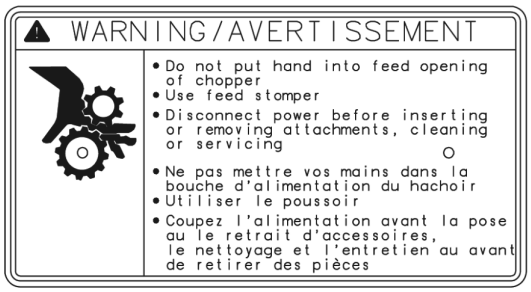

3



4

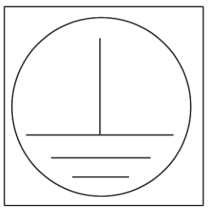

5



6

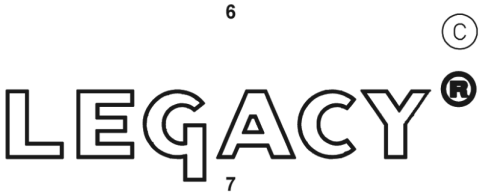

7



8

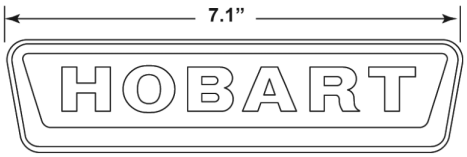

9

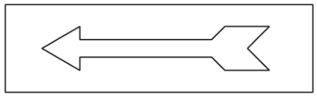

10

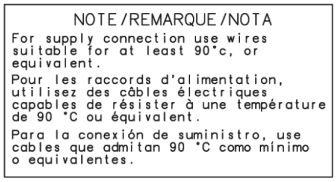

11

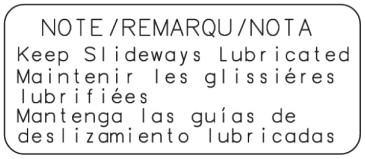

12

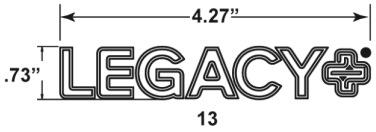

13



14

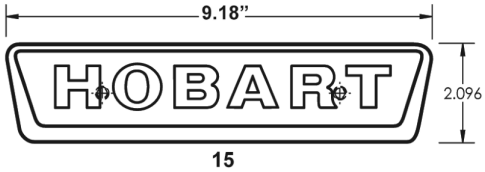

15

PL-65093

LABELS & NAMEPLATES

LABELS & NAMEPLATES

ILLUS. PL-65093	PART NO.	NAME OF PART	AMT.
1	00-438131-00001	Label - Warning	1
2	00-916957-00054	Label - Warning, Moving Parts (Trilingual) (ML-141142 & ML-141063 Only)	1
3	00-916957-00015	Label - Warning Binlingual	1
4	00-916957-00014	Label - Warning Moving Parts (Bilingual)	1
5	00-478685	Symbol - Protective Earth (Ground)	1
6	00-438131-00002	Label - Warning	1
7	00-874379	Label - Legacy	1
8	00-874401	Logo - Hobart (8.5" Wide)	1
9	00-118365	Logo - Hobart (7.1" Wide)	1
10	00-937629	Label - Rotation	1
11	00-916957-00059	Label - Supply Conn (Trilingual) (ML-141142 & ML-141063 Only)	1
12	00-916957-00055	Label - Slideway Lube (Trilingual) (ML-141142 & ML-141063 Only)	1
13	00-938644	Label, Legacy "+" Large (Starting S/N: 31-1622206)	1
14	00-938668	Nameplate, Hobart, Zinc Large R90 (Starting S/N: 31-1622206)	1
15	00-938667	Nameplate, Hobart, Zinc XLarge R80 (Starting S/N: 31-1622206)	1