HOBART

LEGACY®

INSTRUCTION MANUAL

MODELS

HL600, HL600C, & HL662

ML-141063
ML-141070
ML-141069
ML-141066
ML-141068



701 S. RIDGE AVENUE
TROY, OHIO 45374-0001

937 332-3000

www.hobartcorp.com

F45213 (March 2012)

TABLE OF CONTENTS

GENERAL. 3
INSTALLATION. 4
- Unpacking 4
- Location. 4
- Electrical Connections. 5

OPERATION. 6
- Controls. 7
- Bowl Placement. 9
- Agitator. 9
- Power Bowl Lift 9
- Prepare for Mixing. 10
- Timer Operation. 11
- Operating Notes. 11
- Unloading. 12
- Wire Cage 12
- Agitators and Attachments. 13

CLEANING. 14
MAINTENANCE. 15
- Lubrication. 15
- Adjustments. 16

TROUBLESHOOTING. 18
- Service. 19

© HOBART, 2012

INSTALLATION, OPERATION AND CARE OF LEGACY® 60 QUART MIXERS

SAVE THESE INSTRUCTIONS

GENERAL

The Legacy® 60 quart mixer series are heavy-duty mixers which feature a 2.7 horsepower motor, SmartTimer™, a power bowl lift and a #12 attachment hub as standard equipment.

The Legacy® series is available in three models:

- The HL600 is equipped with Stir, plus four mixing speeds.
- The HL662 is equipped with two mixing speeds.

A 40 quart bowl and agitators are also available.

A variety of attachments, agitators and accessories are available. These are described in a separate *Use and Applications Handbook*, which is furnished on the Legacy® Mixer Operator Training CD provided with each mixer.

INSTALLATION

UNPACKING

Immediately after unpacking the mixer, check for possible shipping damage. If this machine is found to be damaged after unpacking, save the packaging material and contact the carrier within 15 days of delivery.

LOCATION

Prior to installation, test the electrical service to assure that it agrees with the specifications on the machine data plate.

Place the mixer in its operating location. There should be adequate space around the mixer for the user to operate the controls and to install and remove bowls. The area above and to the right side of the mixer should allow the top and side covers to be removed for routine maintenance and servicing.

Once in position, the mixer must be leveled:

- Remove the two top cover screws and the top cover.
- Place a level on the top rim of the large pulley (Fig. 1). Slide shims under the base contact surface of the mixer as required to level it front-to-back and side-to-side.
- Do not replace the top cover until installation is completed.

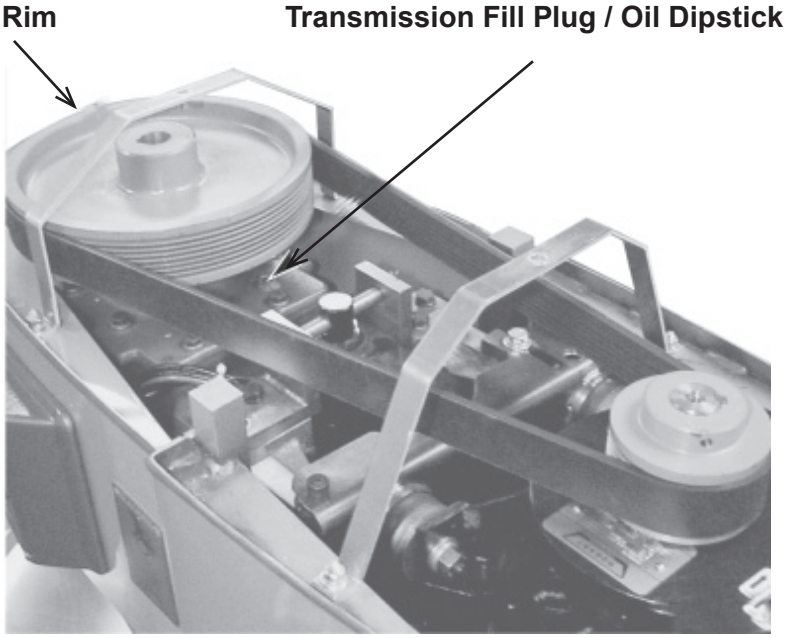

Fig. 1

Check Lubrication Before Use

This mixer is shipped with oil in the transmission. Check oil level before starting mixer. Refer to Lubrication on page 15 for applicable lubrication procedures.

ELECTRICAL CONNECTIONS

⚠ WARNING Electrical and grounding connections must comply with the applicable portion of the National Electrical Code and/or other local electrical codes.

⚠ WARNING DISCONNECT the ELECTRICAL POWER to the machine and follow lockout / tagout procedures.

A hole for 3/4"-trade-size conduit is located at the top of the pedestal. Make electrical connections per the wiring diagram located on the inside of the top cover.

Single-Phase Mixer:

- Connect field supply lead wires to L1 and L2.
- Connect ground wire to ground lug on the mixer.
- Cut off stripped portion of L3 on Legacy® Mixer and wrap securely with electrical tape to insulate the exposed conductor.

Three-Phase Mixer:

- Connect field supply lead wires to L1, L2 and L3.
- Connect ground wire to ground lug on the mixer.

Check Initial Operation

1. Apply power to the mixer.
2. Turn the SPEED dial pointer to STIR for the HL600 and to 1 for the HL662.
3. Install the bowl and lock into mix position, with the Bowl Support all the way up and bowl guard closed. Momentarily run the machine by pushing the START and then STOP buttons.

OPERATION

⚠ WARNING Moving agitator in bowl, keep hands, clothing and utensils out while in operation. Do not use without interlocked guard.

The Legacy® mixer is equipped with SmartTimer™ controls and a power bowl lift. Other operating parts (Fig. 2) and their functions are described throughout the Operation section.

The Wire Cage must be in position or the mixer will not operate.

The bowl must stay in locked position on Bowl Support or the mixer will not operate.

If the Bowl Support is not all the way up (mix position), the mixer will not operate unless the START button is pressed and held.

If the Bowl Support is not at the mix position and the START button is pressed and held, the mixer will operate only in Stir speed.

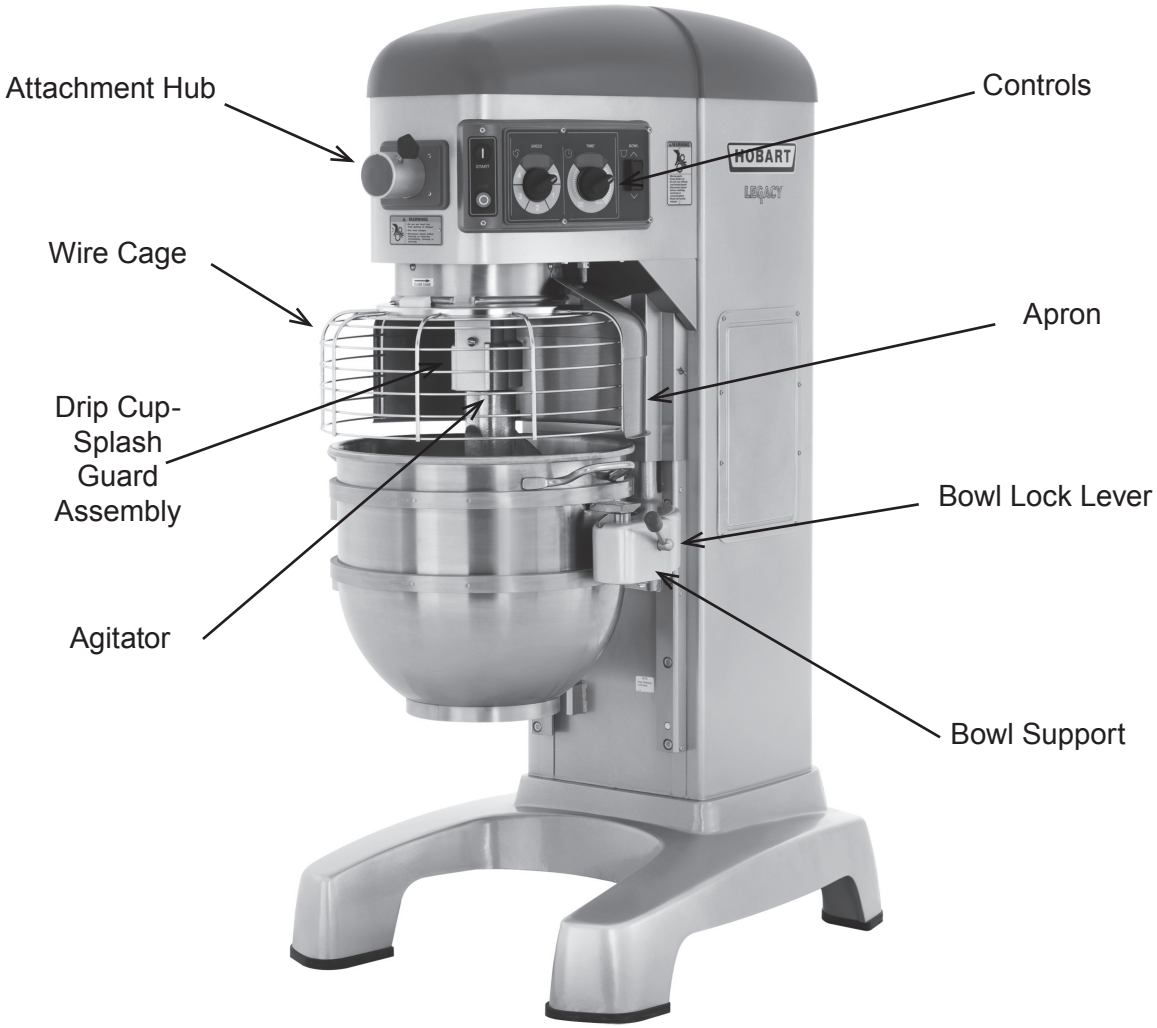

Fig. 2

CONTROLS

Model HL600 (With Four Mix Speeds Plus Stir Speed)

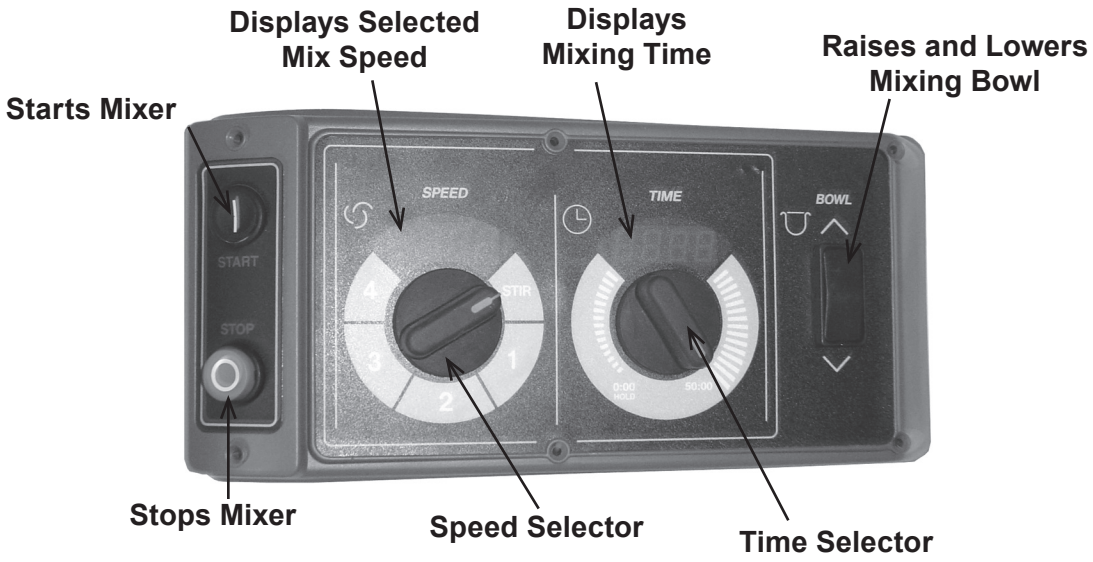

Model HL600 Mixer Speeds

STIR (Slow)	STIR speed is for incorporating ingredients at the start of each mixing process.
Speed 1 (Low)	This speed is for heavy mixtures such as pizza dough, heavy batters and potatoes.
Speed 2 (Medium-low)	This speed is for mixing cake batters, mashing potatoes and developing bread dough.
Speed 3 (Medium-high)	This speed is for incorporating air into light batches, as well as finishing whipped items.
Sped 4 (High)	This speed is for maximum and accelerated air incorporation into light batches.

Model HL662 (With Two Mix Speeds Plus Meat Grind, Cheese Shred, Vegetable Slice Speeds)

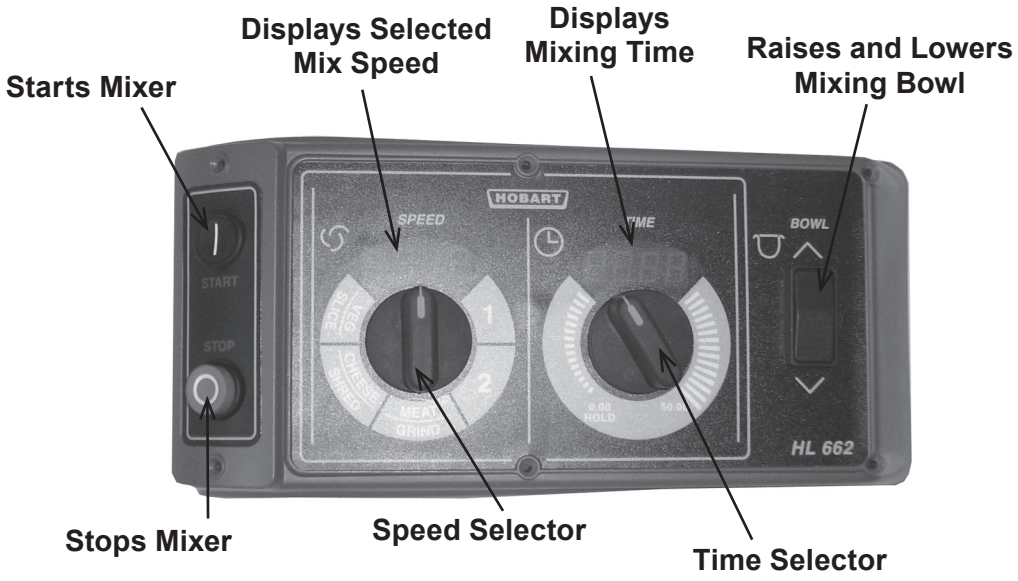

Model HL662 Mixer Speeds

SPEED 1 (Slow)	This speed is for heavy mixtures such as pizza dough.
SPEED 2 (Low)	This speed is for developing pizza dough.
MEAT GRIND	This speed is for grinding meat.
CHEESE SHRED	This speed is for shredding cheese.
VEGETABLE SLICE	This speed is for slicing vegetables.

BOWL PLACEMENT

The bowl must be installed before the agitator is installed.

To install the bowl, fully lower the bowl support. Position bowl so the alignment pins on the left side of the bowl support fit in the holes in the bowl. Swing the bowl into the locked position on bowl support.

AGITATOR

To install an agitator, the bowl must be on the bowl support and fully lowered.

To Install

1. Open the wire cage.
2. Place the agitator inside the bowl and line up the horizontal slot on the agitator with the agitator shaft pins.
3. Slide the agitator up the agitator shaft until it stops and latches.

To Remove

1. Open the wire cage.
2. Lower the bowl by pressing and holding the down arrow on the bowl switch.
3. Hold the agitator and pull the plunger of the agitator out (Fig. 3). Slide agitator down off the agitator shaft.

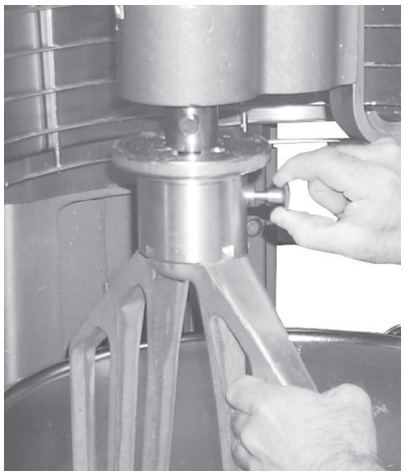

Fig. 3

POWER BOWL LIFT

CAUTION: Before lowering the bowl onto a bowl truck, always unlock bowl and swing bowl out slightly.

To raise the bowl, the bowl must be in the locked position. Push and hold the up arrow on the bowl switch.

To lower the bowl, push and hold the down arrow on the bowl switch.

To Raise the Bowl While Mixing

To raise the bowl while the agitator is mixing the product (when required by recipe or when using the Bowl Scraper Attachment):

1. Close the wire cage, then select a mixing speed on the SPEED dial.
2. Select a count-down time or HOLD for continuous count-up mixing.
3. While pressing and holding the up arrow on the bowl switch, press and hold the START button. The mixer runs only in stir speed while the bowl is rising.
4. When the bowl reaches the mix position, release the START button. The mixer automatically changes to the selected mixing speed.

PREPARE FOR MIXING

1. Place the mixing bowl on the bowl support.
2. Pour ingredients into the bowl.
3. Swing the bowl back to the locked position.
4. Place the agitator inside the bowl, then attach it to the agitator shaft (Fig. 4).
5. Return the wire cage to front-center position.
6. Push and hold the up arrow on the bowl switch until the bowl reaches the mix position and stops.
7. The mixer is now ready for mixing. (See Timer Operation.)

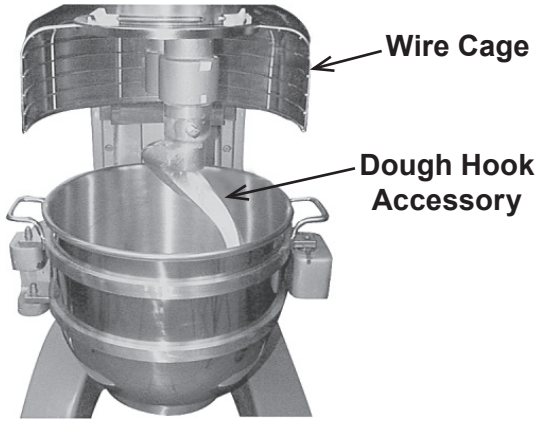

Fig. 4

TIMER OPERATION

Using the Count-Up Mode (Continuous Mixing)

1. Turn the SPEED dial to select a mix speed (the SPEED setting can be changed at any time during the mixing operation).

   NOTE : STIR is to be used for incorporating ingredients. Do not use to develop dough products.

2. Set the timer on hold by turning the TIME selector counterclockwise until "Hold" appears in the TIME window.

3. Press the START button to begin mixing. The timer starts counting forward from 00:00.

   NOTE: If the wire cage is opened at any time, the mixing operation will stop. To resume the mixing operation, close the wire cage and press the START button.

4. Use the STOP button to stop the mixer; the mixing time is displayed in the TIME window.

5. Press the start button to resume mixing if needed.

   NOTE: When the timer reaches 20:00 minutes, it will rollover to 00:01 and continue counting until the STOP button is pressed.

Using the Count-Down Mode (Timed Mixing)

1. Turn the SPEED dial to select a mix speed.

   a. If the count-up mode was used for the previous batch, the desired time needs to be entered.

   b. If the count-down mode was used for the previous batch, the previous time will be displayed. If a different time is needed, turn the TIME selector to the desired time.

2. Press the START button to begin mixing; the timer starts counting down from the set time.

   a. To stop the mixer at any time, press the STOP button. To resume mixing, press the START button. For example: The mixer is started at SPEED 1 for 30 seconds and is stopped after 10 seconds. Pressing the START button will resume the mixing operation.

   b. If the mixer is stopped and a new time setting is entered, pressing the START button saves the new time setting on the current speed selection. For example: The mixer is started at SPEED 1 for 30 seconds and is stopped after 10 seconds. A new time is entered by turning the TIME selector. The new time will replace the initial 30 seconds for SPEED 1 after the START button is pressed.

   c. If the time is changed while mixing, the mixer will operate until the new time expires. The adjustment to the time will not be stored.

   d. If speed is changed while mixing, the time will change to the previous time for the selected speed and count down.

   NOTE: If the wire cage is opened at any time, the mixing operation will stop. To resume the mixing operation, close the wire cage and press the START button.

3. When the timer reaches 00:00, the mixer stops; a beeper sounds for 3 seconds. The count-down timer displays the last-entered time.

OPERATING NOTES

- STIR is to be used for incorporating ingredients. Do not use it to develop dough products.
- If the mixer is stopped during a mixing operation, the timer also stops. The timer starts again where it left off when the START button is pressed.
- The SPEED window will display the SPEED dial's current speed selection. Turn the Time selector clockwise to take the mixer out of the hold mode.

UNLOADING

1. Unlock the bowl and swing-out slightly. Press and hold the down arrow on the bowl switch to lower the bowl.
2. Open the wire cage assembly.
3. Remove the agitator from the agitator shaft.
4. Remove the bowl from the bowl support.

WIRE CAGE (Fig. 5)

The wire cage can be rotated out of the way to add ingredients or to access the bowl and agitator.

Note how the grooves on the nylon retainer shoes allow the Wire Cage to ride around the circular ridge of the planetary drip cup.

- To open the wire cage, rotate it to your left.
- To close the wire cage, rotate it to your right until it stops in the front-center, closed position.

NOTE: The wire cage must be returned to the closed position for the mixer to operate.

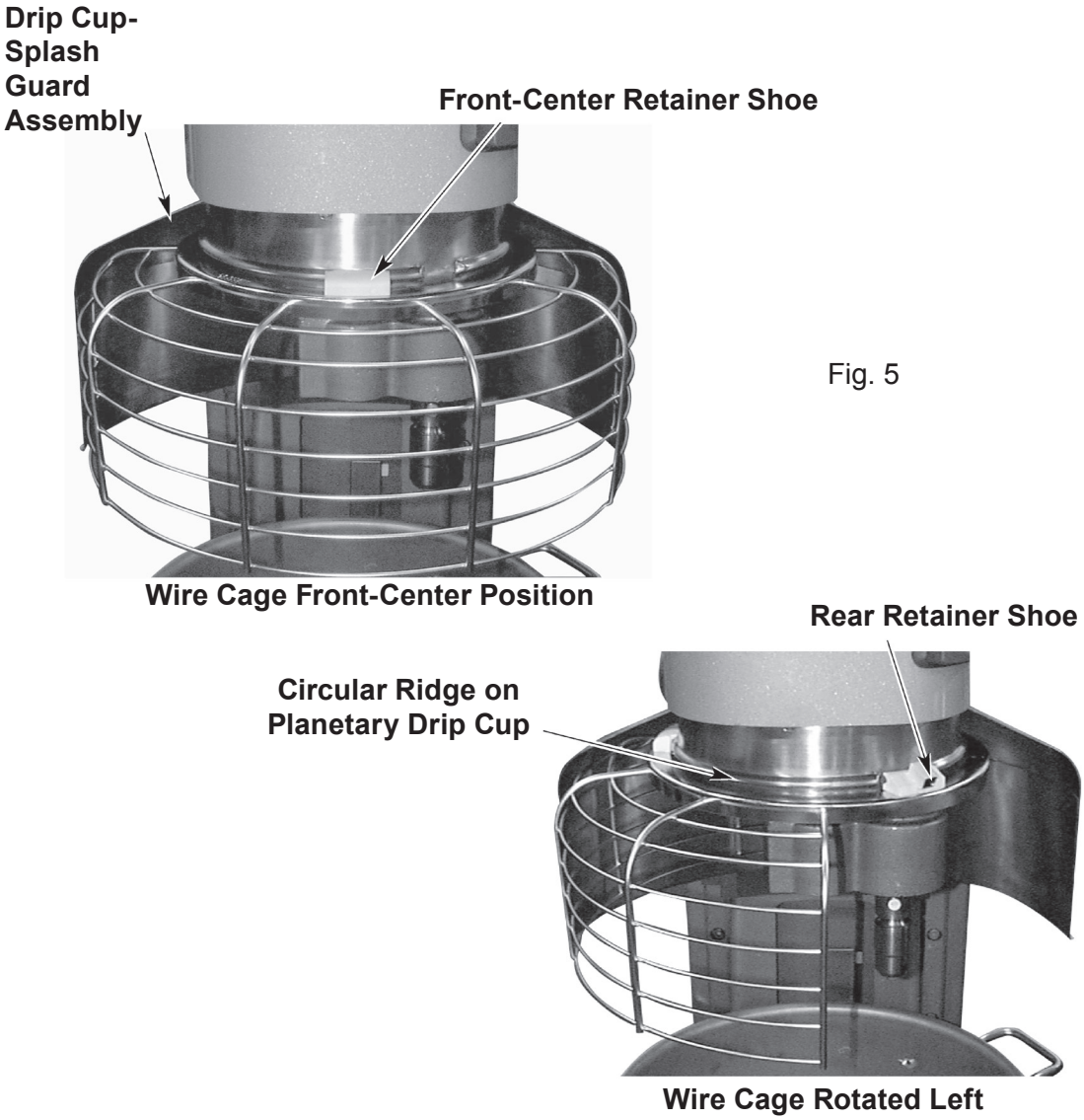

Fig. 5

Remove and Clean Wire Cage (Fig. 6)

1. Lower the bowl. Remove the agitator and bowl.
2. While holding the wire cage securely with both hands, rotate it to your left until the front-center retainer shoe reaches the gap in the circular ridge of the planetary drip cup.
3. Lower the front of the wire cage and move the wire cage slightly to the rear so the rear retainer shoes clear the ridge of the drip cup. The wire cage can now be removed.

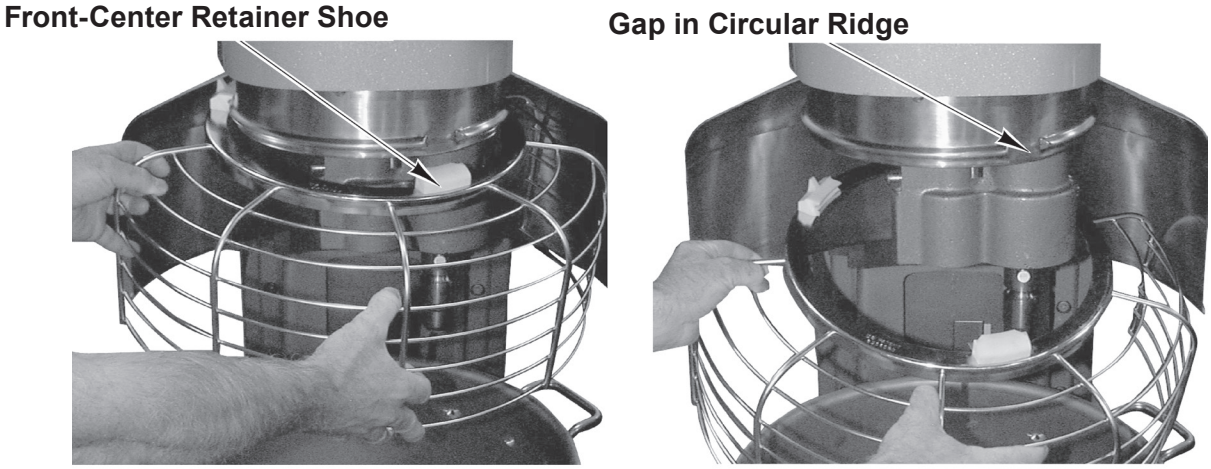

Fig. 6

4. Wash the wire cage in a sink, rinse with clear water, and dry with a clean cloth.
5. The stainless steel splash guard can be wiped off and/or washed with a cloth or sponge using warm, soapy water. Rinse with clear water and dry with a clean cloth.

Reinstall Wire Cage

1. Position the ring of the wire cage so the front-center retainer shoe is positioned below the gap in the circular ridge of the planetary drip cup.
2. Position the grooves so the rear retainer shoes straddle the circular ridge on the planetary drip cup.
3. Lift the front of the wire cage so the front-center retainer shoe passes up through the gap in the circular ridge on the planetary drip cup.
4. Rotate the wire cage to your right until all three retainer shoes straddle the ridge on the drip cup.
5. Continue rotating the wire cage so the opening is to the front of the mixer (to install the agitators) or until it stops at the front-center position.

AGITATORS AND ATTACHMENTS

Attachments for attachment hub and agitators are covered in a separate Hobart Legacy® Mixer *Use and Application Handbook* on the Mixer Operator Information CD. Follow the instructions accordingly.

CLEANING

⚠ WARNING DISCONNECT the ELECTRICAL POWER to the machine and follow lockout / tagout procedures.

New mixer bowls and accessories (beaters, whips and dough arms) should be thoroughly washed with hot water and a mild soap solution, rinsed with either a mild soda or vinegar solution and thoroughly rinsed with clear water before being used. This cleaning procedure should also be followed for bowls and agitators before whipping egg whites or whole eggs.

The mixer should be thoroughly cleaned daily. DO NOT use a hose to clean the mixer; it should be washed with a clean, damp cloth. The base allows ample room for cleaning under the mixer. The apron (Fig. 2, page 6) may be removed for cleaning by loosening the thumb screws.

The drip cup-splash guard assembly (Fig. 2, page 6) should be removed periodically and wiped clean.

For cleaning the Wire Cage refer to page 13.

MAINTENANCE

⚠ WARNING DISCONNECT the ELECTRICAL POWER to the machine and follow lockout / tagout procedures.

LUBRICATION

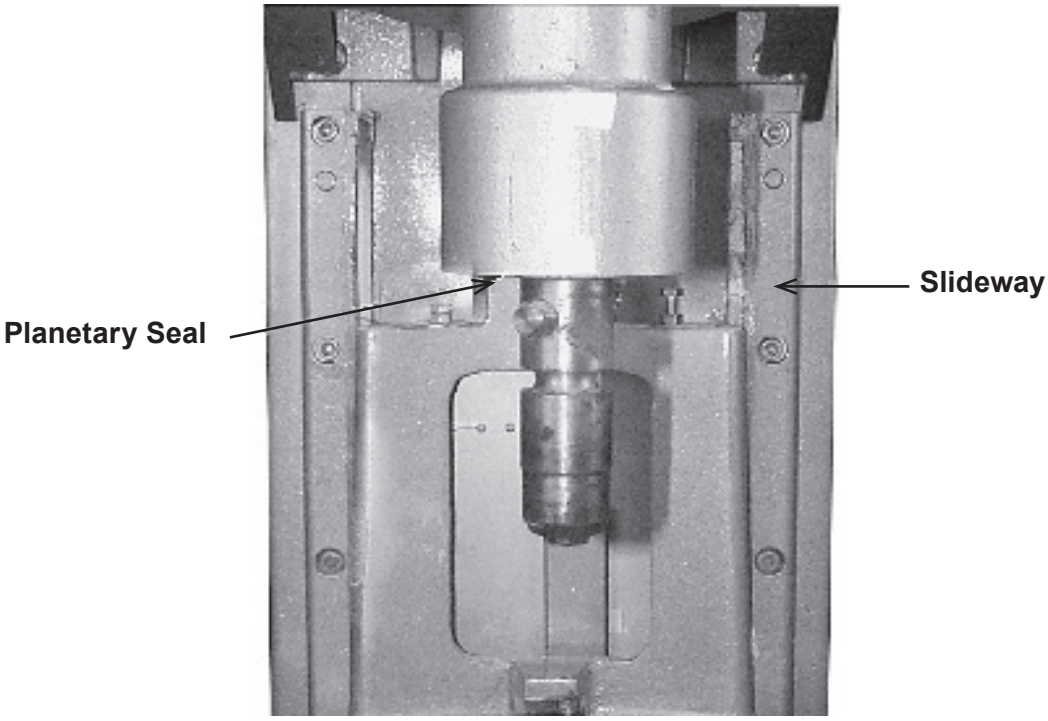

Fig. 7

Slideway

The slideways (Fig. 7) should be lubricated approximately twice a year. To reach these areas, fully lower the bowl support and remove the apron, which is secured by thumb screws. Wipe a thin coat of Lubriplate 630AA on the bowl pad area of the bowl supports and on each slideway. Install the apron.

Planetary Seal

Occasionally, the planetary seal (Fig. 7) may become dry and begin to squeak. To correct this, work a little lubrication (mineral oil) under the lip of the seal.

Transmission

To check the oil level, remove the top cover, which is secured by two screws. Remove the Transmission Fill Plug (Fig. 8) and check the oil level. If the oil level is below the line on the oil dipstick, add a small amount of the recommended transmission oil until it returns to the proper level. Do not overfill the transmission, as leakage may result. Contact your local Hobart Service Office for the recommended transmission oil.

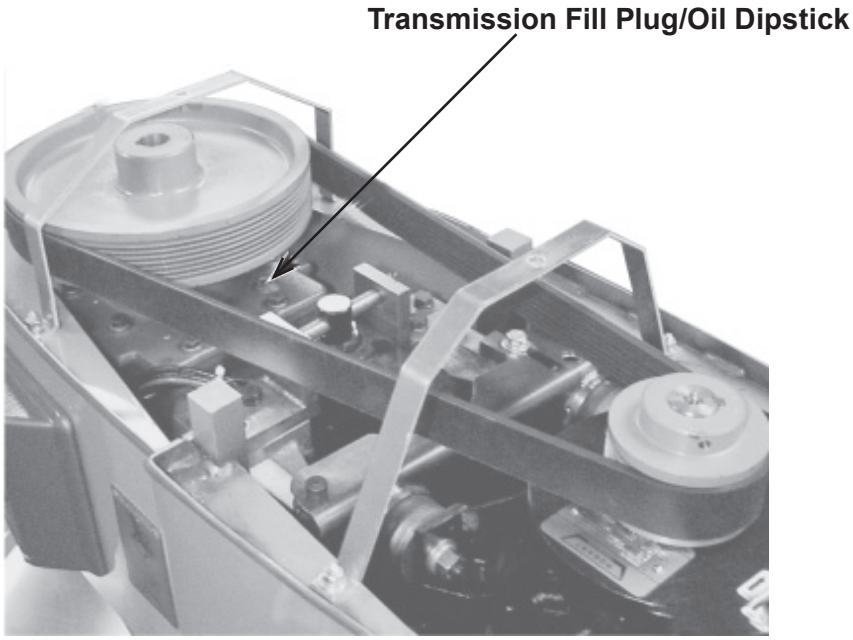

Fig. 8

ADJUSTMENTS

Agitator Clearance

The agitator clearance should be checked periodically. The agitator must not touch the bowl, and the maximum clearance between the bottom of the bowl and the B flat beater is 1/8" (3 mm); the maximum clearance between the bottom of the bowl and the ED dough arm is 5/16" (8 mm).

Install a bowl and agitator (e.g., beater). If the bowl and beater come into contact before the bowl support reaches its stop, adjust the stop screw. Refer to Adjust the Bowl/Agitator Clearance, page 17.

Measure Clearance

Pour enough flour in the bowl to cover the bottom of the bowl where the beater travels. With the bowl fully raised (beater should not touch the bottom of the bowl), briefly run the mixer at the lowest speed.

Turn off the mixer, disconnect the electrical power supply, and measure the depth of flour where the beater has traced a path. This measurement should be taken at several points around the bowl to assure accuracy.

Adjust the Bowl/Agitator Clearance

- Remove the apron (which is secured by thumbscrews).
- Adjust the stop screw on right side.
  - Loosen the bottom locking nut, (Fig. 9) and turn the stop screw counterclockwise to increase the clearance or clockwise to decrease the clearance.
  - Tighten the locking nut while holding the stop screw.
- After the adjustments are made, replace the apron and secure it with the thumbscrews.
- Reconnect the electrical power supply.
- Carefully operate the bowl lift several times to check the adjustment.

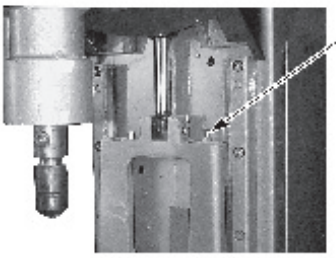

Fig. 9

Bowl Lock Lever

- Occassionally debris may collect and cause the lever to move slowly.
- Pour very warm water around lock pin to flush out food particles that may have collected there. The water should flow through, around the pin. Be sure to have a cloth or dish under to bowl support to catch the water and food particles.
- Lubricate the pin with a thin coat of lubriplate 630AA.

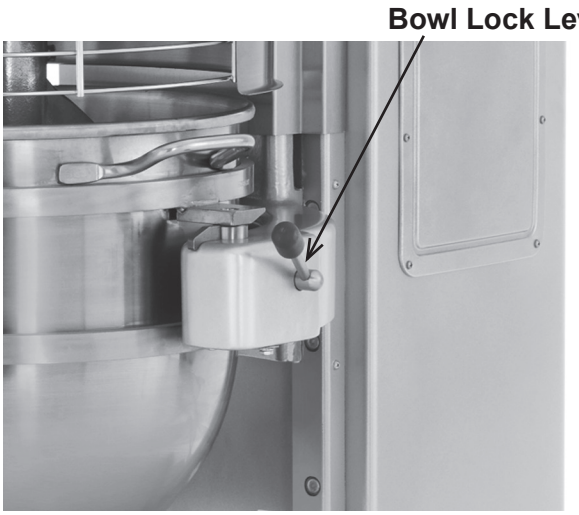

TROUBLESHOOTING

Symptoms	Possible Causes
Mixer will not start.	Circuit protector is in open position - check fuse or disconnect switch. Mixer is overloaded. Wire cage is not in the closed position. Bowl is not in closed (locked) position.
Agitator touches bowl.	Bowl is not in closed (locked) position. Improper agitator clearance - see Maintenance for adjustment procedure. Agitator is not installed properly.
Planetary seal squeaks.	Seal requires occasional lubrication - see Maintenance.
Timer displays error code (ErXX).	If the error code is flashing - wait for mixer to clear error condition. If mixer continues to stop and timer displays flashing error code, disconnect electrical power from mixer for 1 minute, then reconnect. If symptoms still exist, contact your local Hobart Service office.

SERVICE

If service is needed on this equipment, contact your local Hobart Service office.

NOTES