CATALOG OF REPLACEMENT PARTS



HL600 SERIES LEGACY MIXER SERIES (SR Drive)

HL600	**ML-134284**
HL661	**ML-134285**
HL662	**ML-134286**

PRIOR MLS COVERED IN THIS CATALOG

HL600	**ML-134145**
HL661	**ML-134218**
HL662	**ML-134219**
HL600C	**ML-134223**

A product of HOBART 701 S. RIDGE AVENUE TROY, OHIO 45374-0001

FORM 43069 Rev. D (August 2017)

 © HOBART 2017

Table of Contents

5 CONTROL PANEL
7 ELECTRICAL COMPONENTS
9 ATTACHMENT HUB
11 BASE AND PEDESTAL
13 BOWL SUPPORT
15 TRANSMISSION CASE AND MOTOR
17 TRANSMISSION
19 PLANETARY
21 F43069 BOWL GUARD
23 AGITATORS AND ACCESSORIES

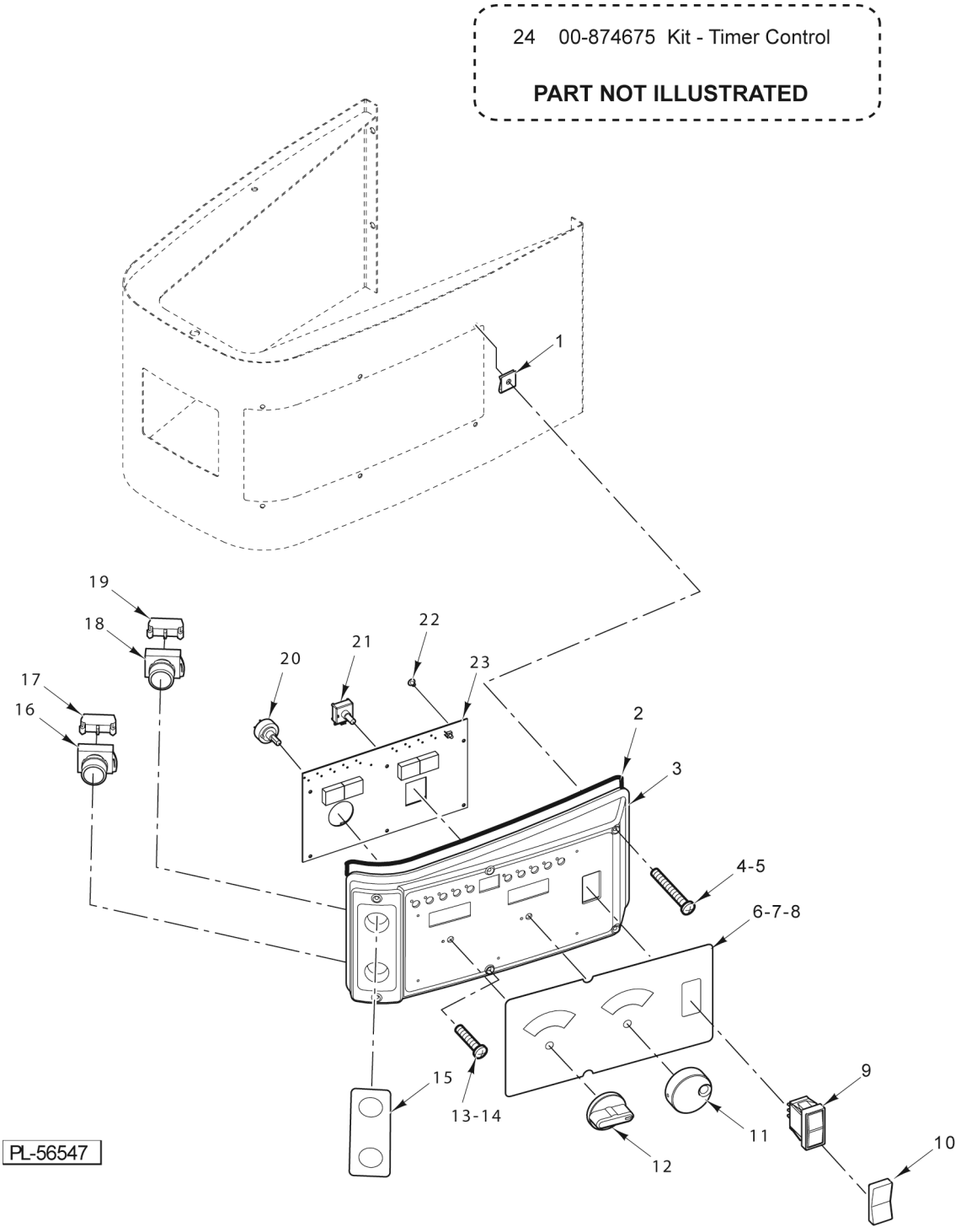

CONTROL PANEL

CONTROL PANEL

ILLUS. PL-56547	PART NO.	NAME OF PART	AMT.
1	00-874338	Fastener - Self-Retaining	6
2	00-875814	Seal - Control Panel	1
3	00-873945	Panel - Control	1
4	SC-128-40	Mach. Screw 8-32 x 2-1/4 Phil. Oval Hd. (SST)	2
5	00-874468	Extension - Screw (ML-134223 & ML-134287)	2
6	00-874195	Overlay (HL600) (ML-134145, ML-134223, ML-134284 & ML-134287)	1
7	00-875568	Overlay (HL661) (ML-134218 & ML-134285)	1
8	00-875569	Overlay (HL662)	1
9	00-087711-330-1	Switch - Rocker	1
10	00-937533	Switch Cover	1
*11	00-875724	Knob - Timer	1
*12	00-874630	Knob - Speed Selector	1
13	SC-128-39	Mach. Screw 8-32 x 1-1/2 Phil. Oval Hd. (SST)	4
14	SC-124-78	Mach. Screw 8-32 x 1 1/2 Hex Flat Hd. (SST) (ML-134223 & ML-134287)	6
15	00-875451	Label (Mix/Stop)	1
16	00-478752-00008	Switch - Operator (Stop)	1
17	00-087711-322-3	Block - Contact (Stop)	1
18	00-478752-00006	Switch - Operator (Start)	1
19	00-087711-322-4	Block - Contact (Start)	1
*20	00-874631	Potentiometer Assy. (Speed Selector)	1
*21	00-875723	Encoder Assy. (Time Selector)	1
22	SD-039-23	Self-Tapping Screw 6-32 x 1/4 Hex Washer Hd., Type RL	5
**23	00-875768	PCB Assy. (Timer Board)	1
24	00-874675	Kit - Timer Control (ML - 134145, ML-134218, ML-134219, & ML-143223)	1

* When replacing this item on prior ML's be sure to order the matching knob or componet.

** When replacing this item on prior ML's order kit 00-874675.

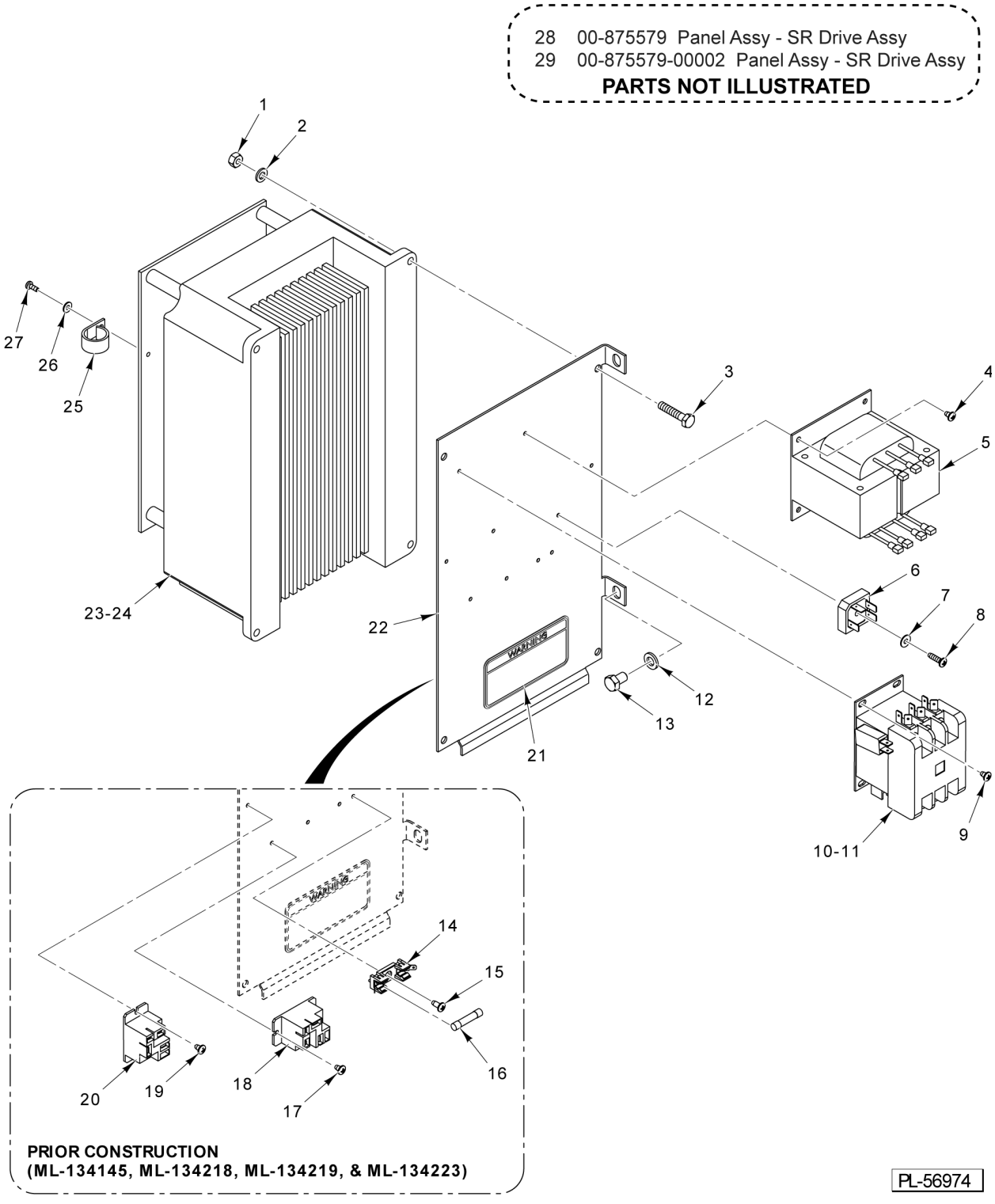

ELECTRICAL COMPONENTS

ELECTRICAL COMPONENTS

ILLUS. PL-56974	PART NO.	NAME OF PART	AMT.
1	NS-013-01	Nut 1/4-20 Hex	4
2	WL-003-38	Lockwasher 1/4 Helical	4
3	SC-036-09	Cap Screw 1/4-20 x 1-1/4 Hex Hd	4
4	SD-015-39	Self-Tapping Screw 8-32 x 1/4 Phil. Pan Hd., Type TT	2
5	00-294500-050-1	Transformer	1
6	00-042159	Rectifier - Bridge (100 V., 35 Amp.)	1
7	WS-019-41	Washer (SST)	1
8	SD-015-42	Self-Tapping Screw 8-32 x 5/8 Phil. Pan Hd., Type TT	1
9	SD-015-39	Self-Tapping Screw 8-32 x 1/4 Phil. Pan Hd., Type TT	1
*10	00-087713-105-1	Contactor (3P, 30 Amp./Aux.)	1
11	00-087713-101-3	Contactor (3P, 30 Amp./Aux.)	1
12	WL-003-44	Lockwasher 5/16 Helical	2
13	SC-041-09	Cap Screw 5/16-18 x 1/2 Hex Hd. (SST)	2
*14	00-294436-00003	Block - Fuse	1
*15	SD-015-40	Self-Tapping Screw 8-32 x 3/8 Phil. Pan Hd., Type TT	1
*16	FE-017-03	Fuse (125 V., 2 Amp.)	1
*17	SD-015-39	Self-Tapping Screw 8-32 x 1/4 Phil. Pan Hd., Type TT	2
*18	00-087714-065-1	Relay SPST, Flange Mounting (24 VAC)	1
*19	00-438131-00174	Label - Warning	1
*20	SD-015-39	Self-Tapping Screw 8-32 x 1/4 Phil. Pan Hd., Type TT	2
21	00-087714-065-1	Relay SPST, Flange Mounting (24 VAC)	1
22	00-874421	Plate - Drive Control Mounting	1
23	00-874029	NLA - Obsolete--Drive - Switch Reluctance (200-240/50/60/3/1)	1
24	00-874029-00002	NLA - Obsolete--Drive - Switch Reluctance (380-460/50/60/3)	1
25	00-294677-00003	Clamp	2
26	WS-023-15	Washer	2
27	SC-018-29	Mach. Screw 6-32 x 3/8 Phil. Pan Hd	2
28	00-875579	Panel Assy. - SR Drive Assy. (200-240/50/60/3/1)	1
29	00-875579-00002	Panel Assy. - SR Drive (380-460/50/60/3)	1

* Only used on ML-134145, ML-134218, ML-134219, & ML-134223.

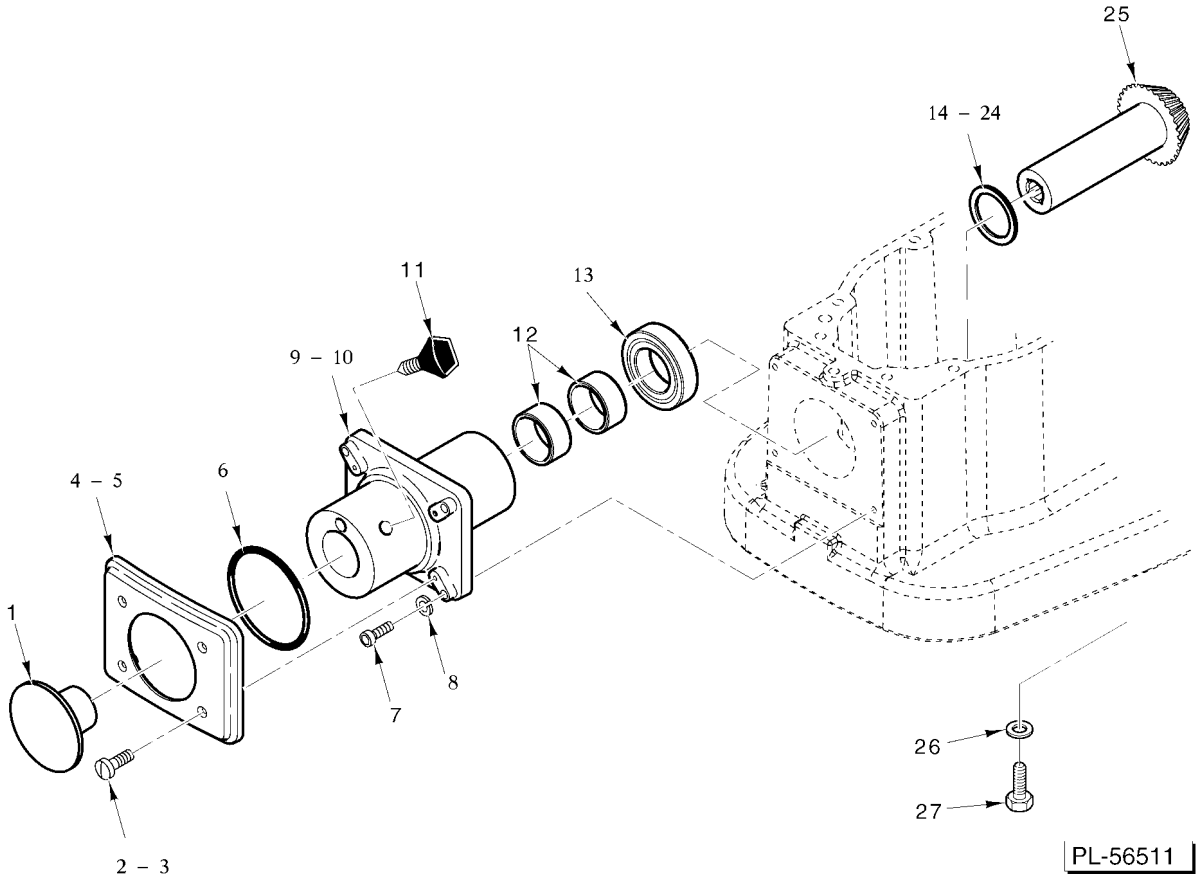

ATTACHMENT HUB

ATTACHMENT HUB

ILLUS. PL-56511	PART NO.	NAME OF PART	AMT.
1	00-114824-00001	Plug - Attachment	1
2	SC-128-37	Mach. Screw 8-32 x 5/8 Phil. Oval Hd	4
3	SC-128-56	Mach. Screw 8-32 x 5/8 Hex Flat Hd. (SST) (ML-134223)	4
4	00-873973-00002	Panel - Front	1
5	00-875813	Seal - Attachment Hub Cover	1
6	OR-001-09	O-Ring	1
7	SC-040-09	Cap Screw 1/4-20 x 1 1/4 Hex Soc. Hd	4
8	WL-003-38	Lockwasher 1/4 Helical	4
9	00-874290-00002	Hub - Attachment	1
10	00-508462	Sealer - Permatex (11 oz.)	1
11	00-108197-00001	Thumb Screw 1-1/4	1
12	BN-002-06	Bearing - Needle	2
13	BB-013-03	Ball Bearing	1
14	00-061920-00001	Washer - Thrust (0.076 Thk.)	AR
15	00-061920-00002	Washer - Thrust (0.079 Thk.)	AR
16	00-061920-00003	Washer - Thrust (0.082 Thk.)	AR
17	00-061920-00004	Washer - Thrust (0.085 Thk.)	AR
18	00-061920-00005	Washer - Thrust (0.088 Thk.)	AR
19	00-061920-00006	Washer - Thrust (0.091 Thk.)	AR
20	00-061920-00007	Washer - Thrust (0.094 Thk.)	AR
21	00-061920-00008	Washer - Thrust (0.097 Thk.)	AR
22	00-061920-00009	Washer - Thrust (0.100 Thk.)	AR
23	00-061920-00010	Washer - Thrust (0.103 Thk.)	AR
24	00-061920-00011	Washer - Thrust (0.106 Thk.)	AR
25	00-874277	Pinion - Bevel (24T)	1
26	WS-021-21	Washer 0.500 x 0.750 x 0.093 (Nylon)	1
27	SC-041-42	Cap Screw 1/2-20 x 1 Hex Hd	1

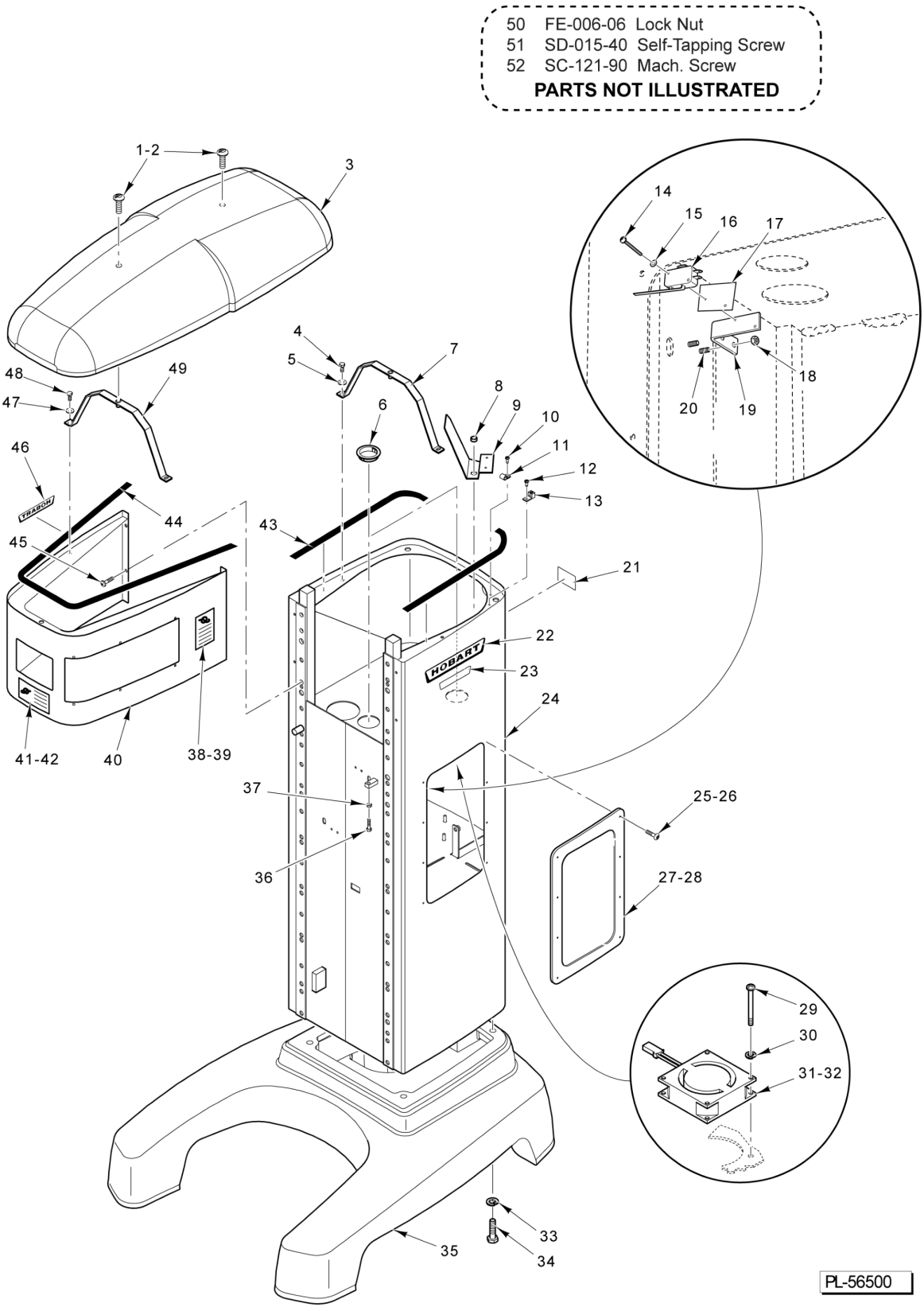

BASE AND PEDESTAL

BASE AND PEDESTAL

ILLUS. PL-56500	PART NO.	NAME OF PART	AMT.
1	SC-120-30	Mach. Screw 1/4-20 x 2 Phil. Oval Hd.	2
2	SC-122-02	Mach. Screw 1/4-20 x 2 Hex Flat Hd. (SST) (ML-134223)	2
3	00-873882	Cover - Top	1
4	SC-036-06	Cap Screw 1/4-20 x 1 Hex Hd.	2
5	WS-003-43	Washer	2
6	FE-026-28	Bushing - Electric Snap	2
7	00-874222	Rear Strap Assy. - Rear	1
8	FE-021-13	Bushing - Electric Split	1
9	00-874473	Shield - Wire	1
10	SD-029-02	Self-Tapping Screw 10-24 x 1/2 Slotted Pan Hd., Type F	1
11	00-078752-00003	Clamp - Cable	1
12	SD-029-02	Self-Tapping Screw 10-24 x 1/2 Slotted Pan Hd., Type F	1
13	00-118544-00001	Lug - Solderless	1
14	SC-060-40	Mach. Screw 4-40 x 5/8 Slotted Rd. Hd.	4
15	WL-003-03	Lockwasher #4 Helical	4
16	00-087711-00248	Switch - Bowl Height	2
17	00-439892	Insulator - Switch	2
18	NS-044-09	Nut Assy. 10-24 Hex KEPS	4
19	00-874109	Bracket - Bowl Travel Switch	2
20	00-113631-00006	Stud - Self-Clinching	4
21	00-438131-061-1	Label - Warning (California)	1
22	00-874401	Logo - Hobart	1
23	00-874379	Label - Legacy	1
24	00-873894-00003	NLA - Obsolete--Pedestal Assy	1
25	SD-009-41	Self-Tapping Screw 8-32 x 3/8 Slotted Pan Hd., Type F (SST)	8
26	SC-122-76	Mach. Screw 8-32 x 1/2 Hex Button Hd. (SST) (ML-134223)	8
27	00-874238-00001	Cover - Side (Incls. Gasket)	1
28	00-875815	Seal - Side Panel	2
29	SC-110-48	Mach. Screw 6-32 x 2 Slotted Pan Hd.	2
30	WL-003-09	Lockwasher #6 Helical	2
31	00-874535	Fan - Cooling (24 VDC)	1
32	00-875676	Fan - Cooling (220 VAC) (ML-134145, ML-134218, ML-134219 & ML-134287)	1
33	WL-004-11	Lockwasher 1/2 Helical	4
34	SC-037-06	Cap Screw 1/2-13 x 2 3/4 Hex Hd.	4
35	00-873950-00002	Base	1
36	SC-041-13	Cap Screw 5/16-18 x 1 Hex Hd. (SST)	1
37	NS-013-14	Nut 5/16-18 Hex	1
38	00-438131-00001	Plate - Caution	1
39	RS-003-04	Rivet	1
40	00-873897-00001	Wrapper - Transmission	1
41	00-438131-00002	Plate - Warning	1
42	RS-003-04	Rivet	1
43	00-874512-00001	Seal - Top Cover (Rear)	2
44	00-874512-00002	Seal - Top Cover	1
45	SD-039-06	Self-Tapping Screw 1/4-20 x 3/4 Hex Washer Hd., Type F	4
46	00-118365	Decal - Hobart	1
47	WS-003-43	Washer	2
48	SC-036-06	Cap Screw 1/4-20 x 1 Hex Hd.	2
49	00-874223	Strap Assy. - Front	1
50	FE-006-06	Lock Nut - Electric 3/4 (ML-134223)	1
51	SD-015-40	Self-Tapping Screw 8-32 x 3/8 Phil. Pan Hd., Type TT (ML-134223)	1
52	SC-121-90	Mach. Screw 6-32 x 3/8 Hex Button Hd. (SST) (ML-134223)	2

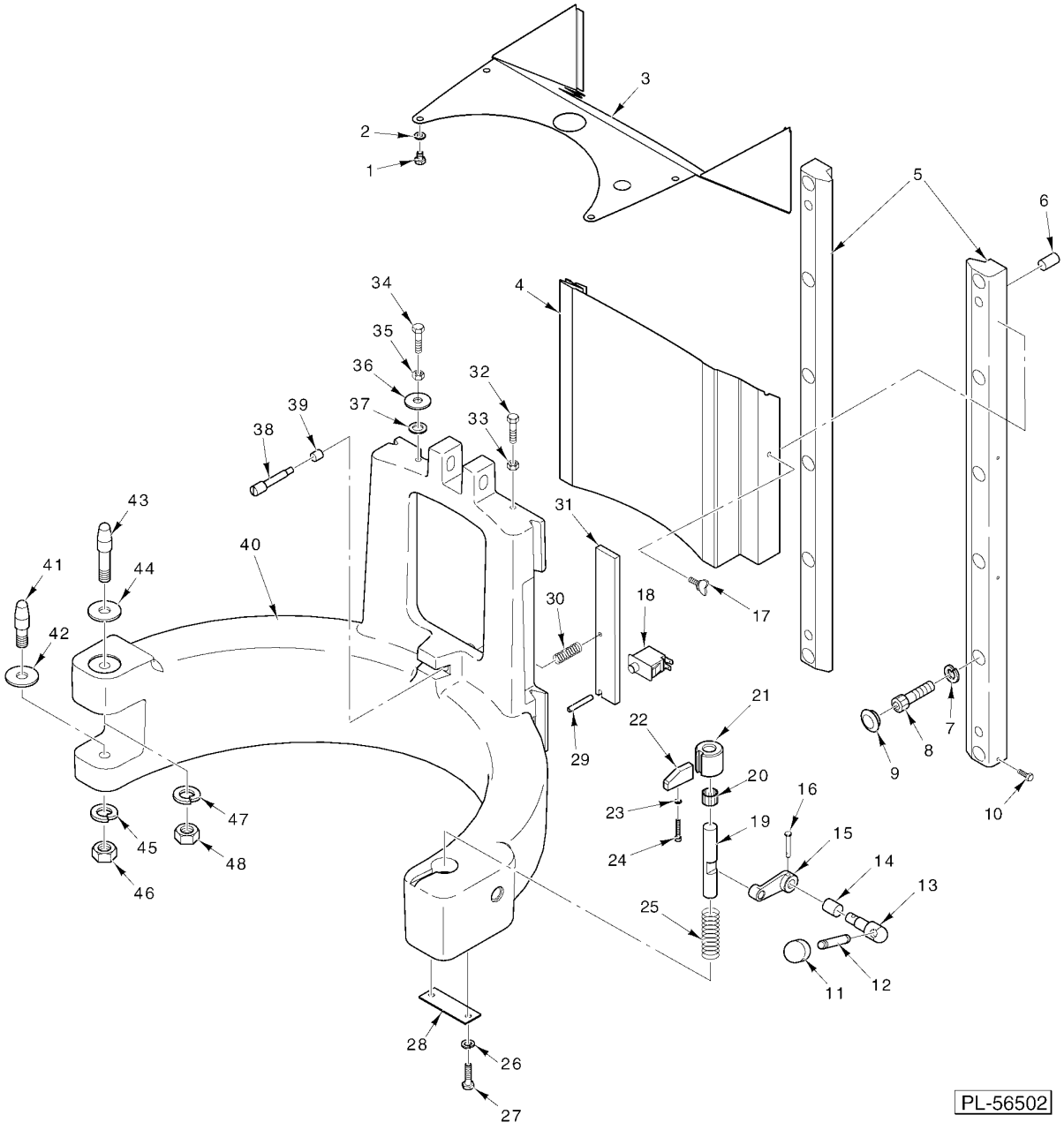

BOWL SUPPORT

BOWL SUPPORT

ILLUS. PL-56502	PART NO.	NAME OF PART	AMT.
1	SC-062-20	Cap Screw 1/4-20 x 3/8 Hex Hd	4
2	WL-003-38	Lockwasher 1/4 Helical	4
3	00-874357	NLA - Obsolete--Cover - Apron	1
4	00-874324	NLA - Obsolete--Apron - Lower	1
5	00-873885	Slideway	2
6	00-011800-00143	Pin - Dowel 1/2 x 1-3/4 SAE	2
7	WL-004-02	Lockwasher 3/8 Helical	12
8	SC-092-62	Cap Screw 3/8-16 x 1 1/2 Hex Soc. Hd	12
9	PB-004-90	Cap	12
10	SC-128-48	Mach. Screw 10-24 x 1/4 Hex Hd. (ML-134223)	6
11	00-875356	Handle - Lift Lever	1
12	00-874197	Shaft - Bowl Pin Handle	1
13	00-874220	Handle - Bowl Pin	1
14	00-874138	Bushing - Bowl Pin Cam	1
15	00-874218	Clevis - Bowl Lock	1
16	00-874388		1
17	00-070641-00009	Thumb Screw (ML-134145, ML-134218, & ML-134219)	2
18	00-087711-00338	Switch - Panel Front	1
19	00-874219	Pin - Bowl (RH)	1
20	00-874499	Bushing - Bowl Lock Pin	2
21	00-874506	Button - Rest Bowl	1
22	00-874113	Ramp - Wear	1
23	WL-003-12	Washer	1
24	SC-040-92	Cap Screw 8-32 x 1 Hex Soc. Hd	1
25	00-874198	Spring - Bowl Pin	1
26	WL-003-38	Lockwasher 1/4 Helical	2
27	SC-036-14	Cap Screw 1/4-20 x 1/2 Hex Hd	2
28	00-874199	Strap - Spring Retaining	1
29	RP-005-12	Roll Pin 0.187 x 1.250 Lg	1
30	00-874496	Spring - Pushplate	1
31	00-874464	Plate - Push	1
32	SC-041-13	Cap Screw 5/16-18 x 1 Hex Hd. (SST)	1
33	NS-013-14	Nut 5/16-18 Hex	1
34	SC-041-13	Cap Screw 5/16-18 x 1 Hex Hd. (SST)	1
35	NS-013-14	Nut 5/16-18 Hex	1
36	WS-005-33	Washer (SST)	1
37	WS-006-36	Washer	3
38	00-874458	Plunger - Bowl-In	1
39	00-874492	Bushing - Bowl-In	1
40	00-873844-00002	Yoke	1
41	00-873846	Pin - Bowl	1
42	00-874084	Bushing - Bowl Support	1
43	00-873845	Pin - Bowl	1
44	00-874084	Bushing - Bowl Support	1
45	WL-004-12	Lockwasher 1/2 Helical	1
46	NS-013-30	Nut 1/2-13 Hex	1
47	WL-004-12	Lockwasher 1/2 Helical	1
48	NS-013-30	Nut 1/2-13 Hex	1
	00-874139	Handle Assy. - Bowl Lock	1
	00-874139-00002	Bowl Lock Handle Assy. (Welded) (ML-134223 & ML-134287)	1

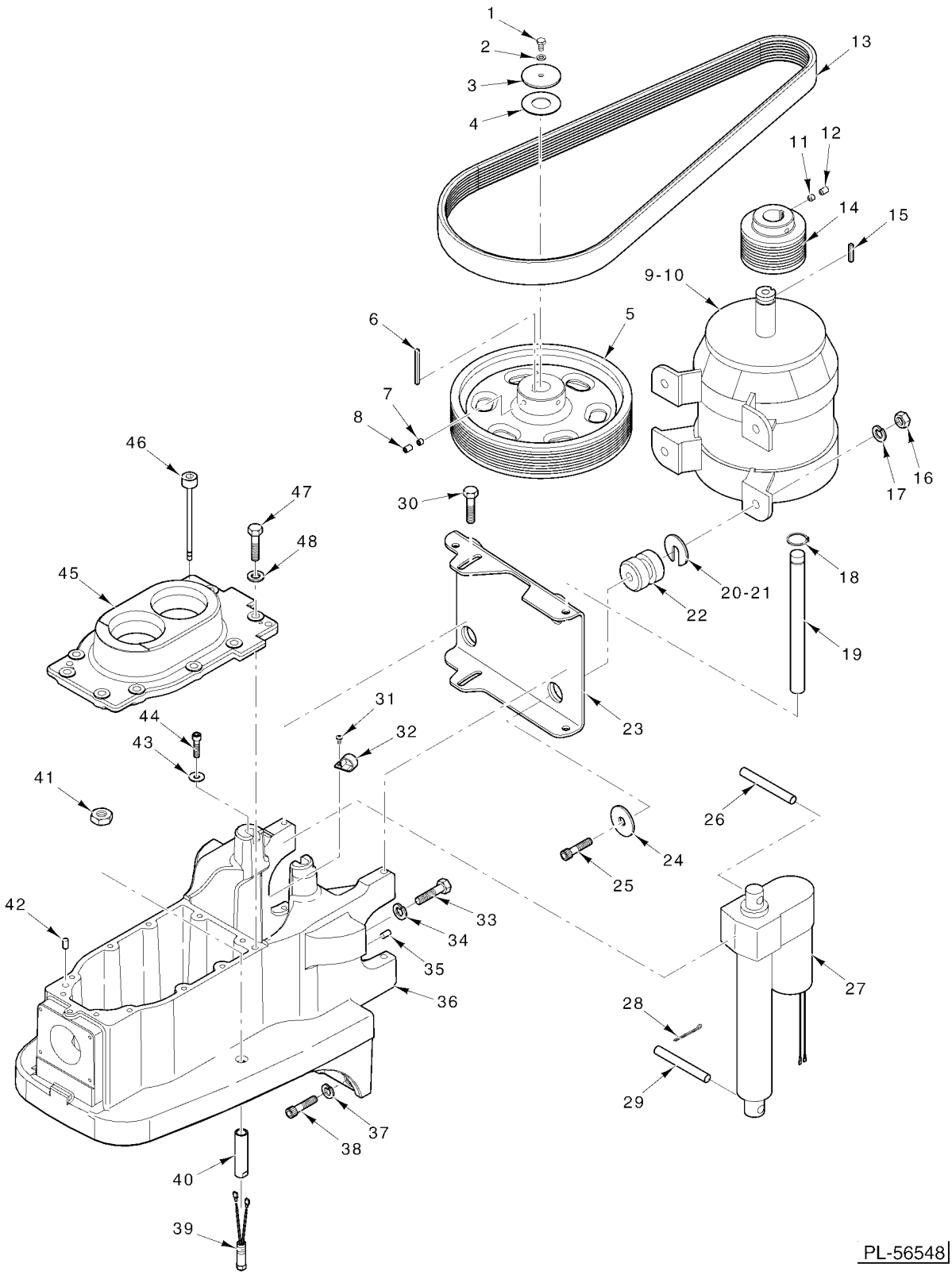

TRANSMISSION CASE AND MOTOR

TRANSMISSION CASE AND MOTOR

ILLUS. PL-56548	PART NO.	NAME OF PART	AMT.
1	SC-036-14	Cap Screw 1/4-20 x 1/2 Hex Hd	1
2	WL-003-38	Lockwasher 1/4 Helical	1
3	00-874345-00003	Washer - Special	1
4	00-874345-00004	Washer - Special	1
5	00-874000	Sheave - Driven	1
6	00-012430-00177	Key 1/4 x 1/4 x 2-1/2	1
7	SC-047-31	Set Screw 5/16-18 x 5/16 Hex Hdls., Cup Pt	2
8	SC-047-34	Set Screw 5/16-18 x 1/2 Hex Hdls., Cup Pt	2
9	00-873943-00001	Motor - Switch Reluctance (200-240/50/60/3/1)	1
10	00-873943-00002	Motor - Switch Reluctance (380-460/50/60/3)	1
11	SC-047-31	Set Screw 5/16-18 x 5/16 Hex Hdls., Cup Pt	2
12	SC-047-34	Set Screw 5/16-18 x 1/2 Hex Hdls., Cup Pt	2
13	00-873921	Belt	1
14	00-873999	Sheave - Drive	1
15	00-012430-00163	Key 1/4 x 1/4 x 1 3/4	1
16	NS-013-30	Nut 1/2-13 Hex	4
17	WL-004-12	Lockwasher 1/2 Helical	4
18	RR-004-19	Retaining Ring	2
19	00-874241	Pin - Pivot Motor Bracket	1
20	00-874373-00001	Shim - Motor (0.059)	AR
21	00-874345-00001	Washer	AR
22	00-874346	Isolator	2
23	00-874349	Plate - Motor Assy	1
24	00-874345-00001	Washer	2
25	SC-087-54	Cap Screw 1/2-13 x 3 1/4 Hex Soc. Hd	2
26	00-874315	Pin - Actuator (Upper)	1
27	00-874057	Actuator (Bowl Lift)	1
28	PC-003-50	Cotter Pin 7/64 x 1 Lg	1
29	00-874117	Pin - Clevis	1
30	SC-123-50	Cap Screw 3/8-16 x 1 Hex Washer Hd	2
31	SC-018-62	Mach. Screw 10-24 x 3/8	1
32	00-294677-00003	Clamp	1
33	SC-062-67	Cap Screw 1/2-13 x 2-1/4 Hex Hd	4
34	WL-004-11	Lockwasher 1/2 Helical	2
35	00-011800-00221	Dowel	2
36	00-873996-00002	Case - Transmission	1
37	WL-004-11	Lockwasher 1/2 Helical	2
38	SC-040-36	Cap Screw 1/2-13 x 1 3/4 Soc. Hex Hd	2
39	00-874958-00001	Switch - Reed & Extension	1
40	00-874128	Extension - Bowl Guard Switch (Bowl Guard)	1
41	NS-017-46	Jam Nut 3/4-10 Hex	1
42	00-011800-00224	Dowel	2
43	WS-006-36	Washer	2
44	SC-040-16	Cap Screw 5/16-18 x 1 Hex Soc. Hd	2
45	00-873916-00002	Cover - Transmission	1
46	00-874131	Dipstick	1
47	SC-062-48	Cap Screw 3/8-16 x 1 1/8 Hex Hd	10
48	WL-004-04	Lockwasher 3/8 Helical	10

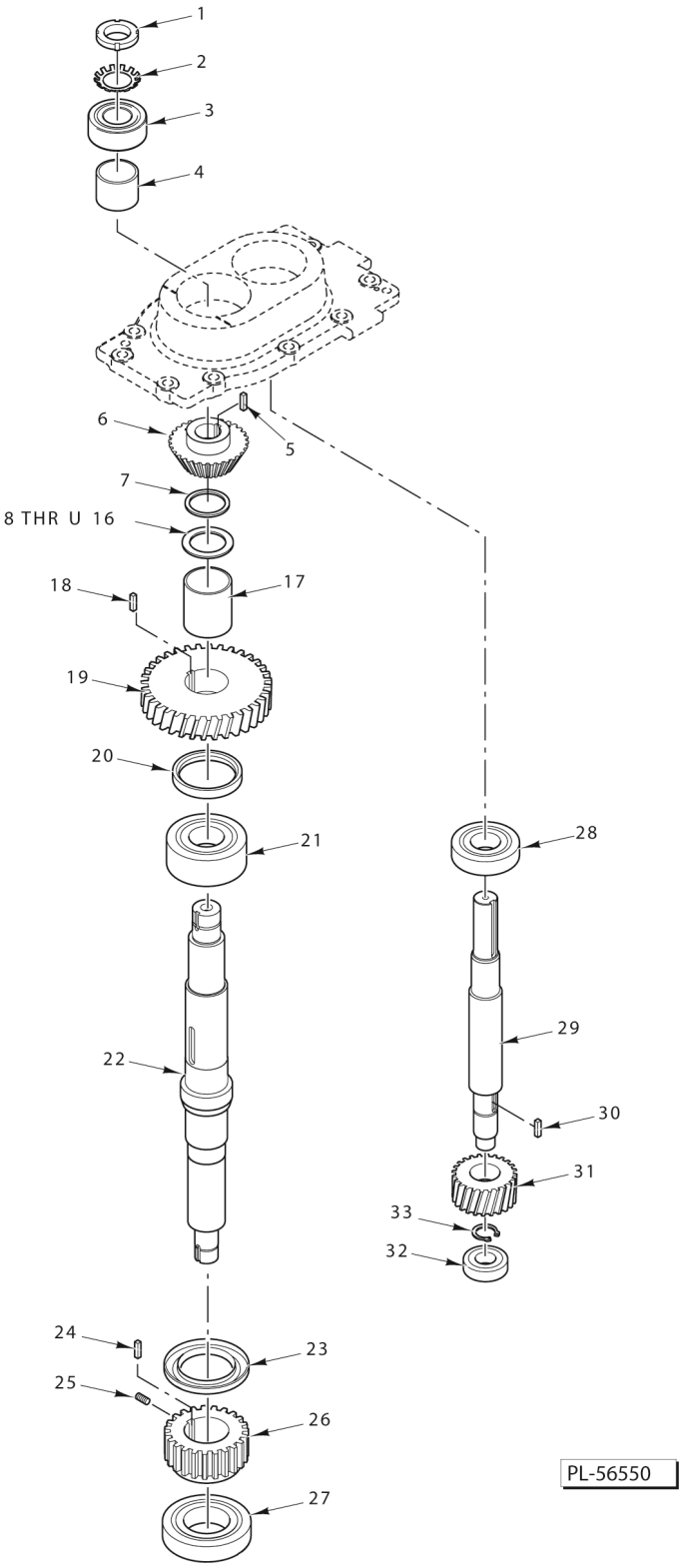

TRANSMISSION

TRANSMISSION

ILLUS. PL-56550	PART NO.	NAME OF PART	AMT.
1	NS-034-07	Lock Nut	1
2	WL-017-07	Lockwasher - Bearing 1.500 x 1.953	1
3	BB-021-35	Ball Bearing (SKF-5206 A-2RS/C3/HT51)	1
4	00-874293	Spacer (1.505 I.D.)	1
5	00-875419-00071	Key 5/16 x 5/16 x 1-5/8	1
6	00-874282	Gear - Bevel (30T)	1
7	00-874384	Spacer - Gear	1
8	00-874283-00001	Shim - Gear	AR
9	00-874283-00002	Shim - Gear	AR
10	00-874283-00003	Shim - Gear (0.078 Thk.)	AR
11	00-874283-00004	Shim - Gear (0.084 Thk.)	AR
12	00-874283-00005	Shim - Gear (0.090 Thk.)	AR
13	00-874283-00006	Shim - Gear (0.096 Thk.)	AR
14	00-874283-00007	Shim - Gear	AR
15	00-874283-00008	Shim - Gear	AR
16	00-874283-00009	Shim - Gear (0.116 Thk.)	AR
17	00-874294	Spacer (1.755 I.D.)	1
18	00-875419-00075	Key 5/16 x 5/16 x 1-1/16	1
19	00-873914	Gear - Drive	1
20	00-873922	Spacer - Planetary Shaft	1
21	BB-009-30	Ball Bearing	1
22	00-873908	Shaft - Planetary	1
23	00-873939	Seal	1
24	00-875419-00075	Key 5/16 x 5/16 x 1-1/16	1
25	SC-047-12	Set Screw 1/4-20 x 3/8 Socket Hdls., Knife Cup Pt	1
25	00-873912	Gear - Sun	1
27	BB-007-01	Ball Bearing	1
28	BB-006-36	Ball Bearing	1
29	00-873913	Shaft - Input	1
30	00-012430-00048	Key 3/16 x 3/16 x 3/4	1
31	00-873915	Gear - Pinion	1
32	BB-007-14	Ball Bearing	1
33	RR-009-07	Retaining Ring	1

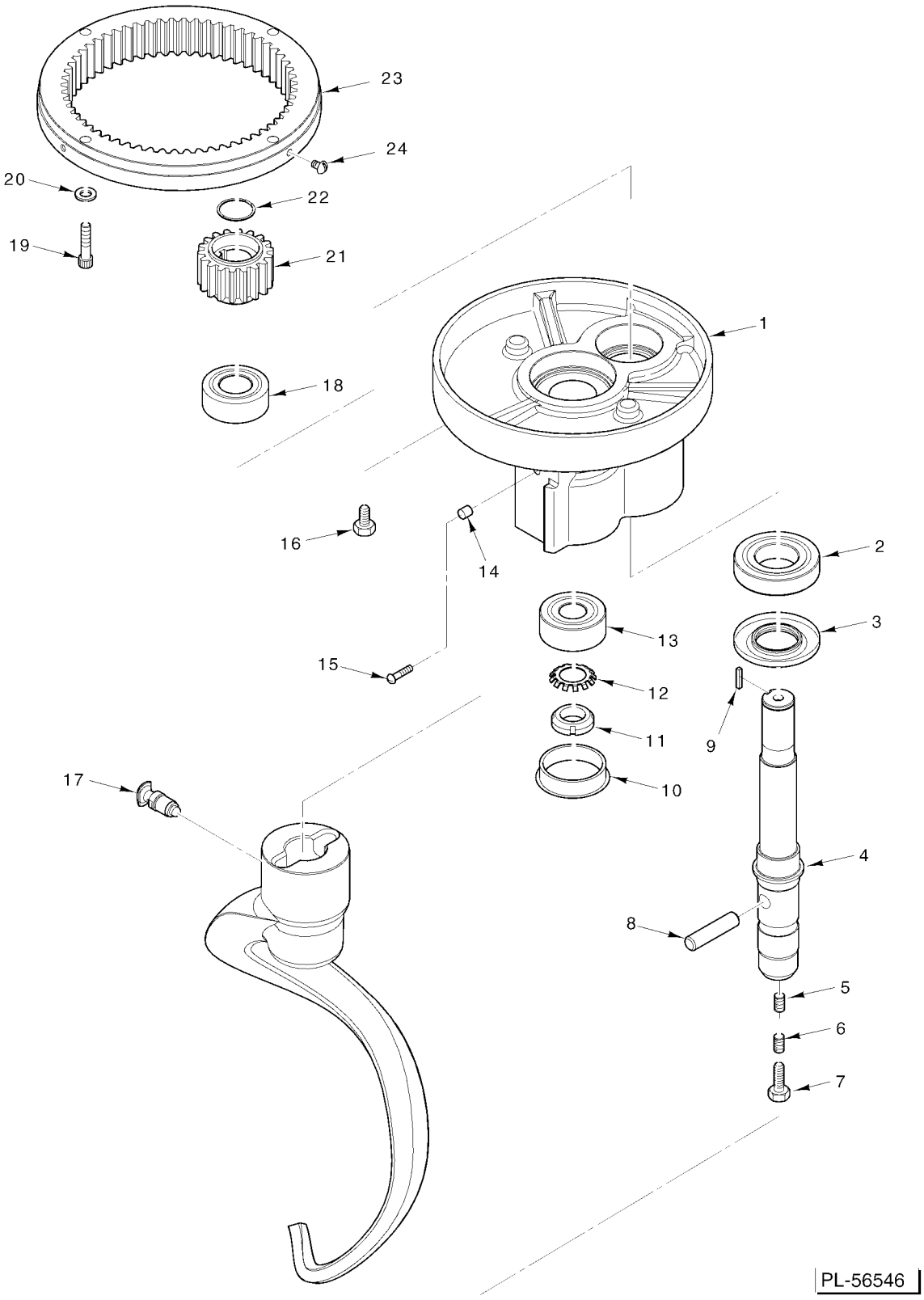

PLANETARY

PLANETARY

ILLUS. PL-56546	PART NO.	NAME OF PART	AMT.
1	00-873995-00002	Planetary	1
2	BB-007-01	Ball Bearing	1
3	00-292288	Seal	1
4	00-873923	Shaft - Agitator	1
5	00-007744	Set Screw Hdls., Cone Pt	1
6	SC-047-41	Set Screw 3/8-16 x 3/8 Soc. Hdls., Cup Pt	1
7	00-064723	Plug - Agitator Shaft	1
8	00-873953	Pin - Agitator Shaft	1
9	00-012430-00154	Key 1/4 x 1/4 1 3/8	1
10	00-874291	Plug - Planetary (Plastic)	1
11	NS-034-06	Lock Nut	1
12	WL-012-06	Lockwasher - Bearing 0.989 x 1.719	1
13	BB-021-52	Ball Bearing	1
14	00-874181	Spacer - Scraper Arm	1
15	SC-021-54	Mach. Screw 5/16-18 x 7/8 Slotted Rd. Hd. (SST)	1
16	SC-041-26	Cap Screw 3/8-16 x 1/2 Hex Hd. (SST)	2
17	00-874145	Plunger Assy	1
18	BB-021-35	Ball Bearing	1
19	SC-040-23	Cap Screw 3/8-16 x 1 1/4 Hex Soc. Hd	4
20	WL-019-92	Lockwasher 3/8 Helical	4
21	00-024270	Pinion - Internal (18T)	1
22	RR-005-08	Retaining Ring	1
23	00-437692	Gear - Internal	1
24	SC-021-37	Mach. Screw 1/4-20 x 3/8 Slotted Rd. Hd. (SST)	3

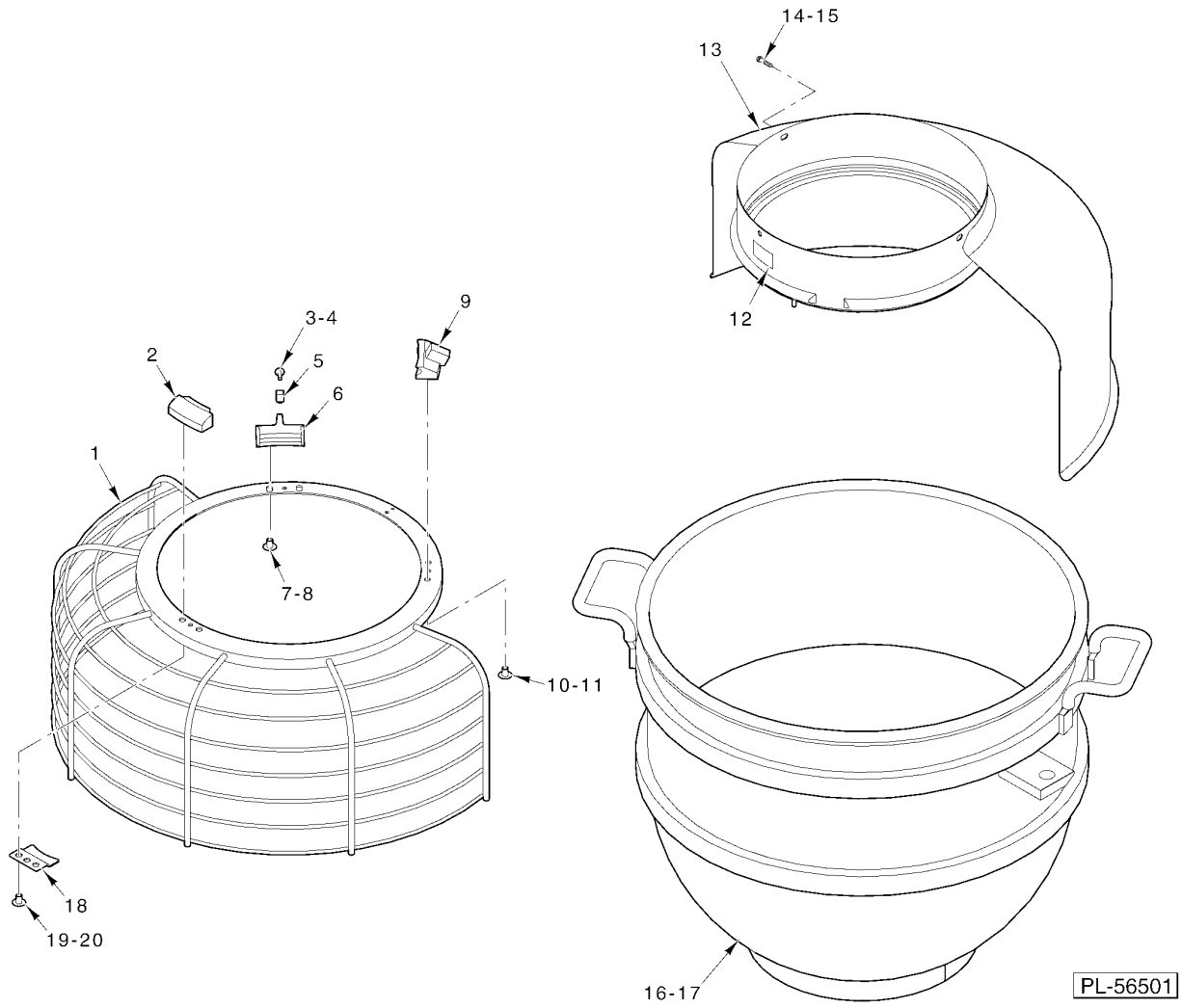

F43069 BOWL GUARD

F43069 BOWL GUARD

ILLUS. PL-56501	PART NO.	NAME OF PART	AMT.
1	00-874124	Wire Cage	1
2	00-874126	Shoe - Front	1
3	SC-123-07	Mach. Screw 8-32 x 1/2 Slotted Truss Hd	1
4	SC-122-76	Mach. Screw 8-32 x 1/2 Hex Button Hd. (ML-134223)	1
5	00-437720	Key - Shoe	1
6	00-437433-00003	Shoes - Adjustable	1
7	SC-122-45	Mach. Screw 1/4-20 x 3/8 Slotted Truss Hd	2
8	SC-122-52	Mach. Screw 1/4-20 x 3/8 Hex Button Hd. (SST) (ML-134223)	2
9	00-874127	Shoe - Fixed	1
10	SC-122-45	Mach. Screw 1/4-20 x 3/8 Slotted Truss Hd	2
11	SC-122-52	Mach. Screw 1/4-20 x 3/8 Hex Button Hd. (SST) (ML-134223)	2
12	00-875726	Label - Cage	1
13	00-874123	Guard - Splash & Drip	1
14	SC-021-37	Mach. Screw 1/4-20 x 3/8 Slotted Rd. Hd. (SST)	3
15	SC-122-52	Mach. Screw 1/4-20 x 3/8 Hex Button Hd. (SST) (ML-134223)	3
16	00-875603	Bowl Assy. (60 Quart) (Packaged)	1
17	00-875604	Bowl Assy. (40 Quart) (Packaged) (Not Shown)	1
18	00-874168	Stop - Cage	1
19	SC-122-45	Mach. Screw 1/4-20 x 3/8 Slotted Truss Hd	2
20	SC-122-52	Mach. Screw 1/4-20 x 3/8 Hex Button Hd. (SST) (ML-134223)	2
	00-512987	Adhesive	AR
	00-916004	Wire Cage Assy. Wire Cage Assy (Incls. Items 1,2,3,5,6,7,9,10,18, & 19)	1
	00-916004-00002	Wire Cage Assy. - Security Wire Cage Assy.(Incls. Items 1,2,4,5,6,8,9,11,17,18, 20 & Adhesive)(ML-134223 & ML-134287)	1

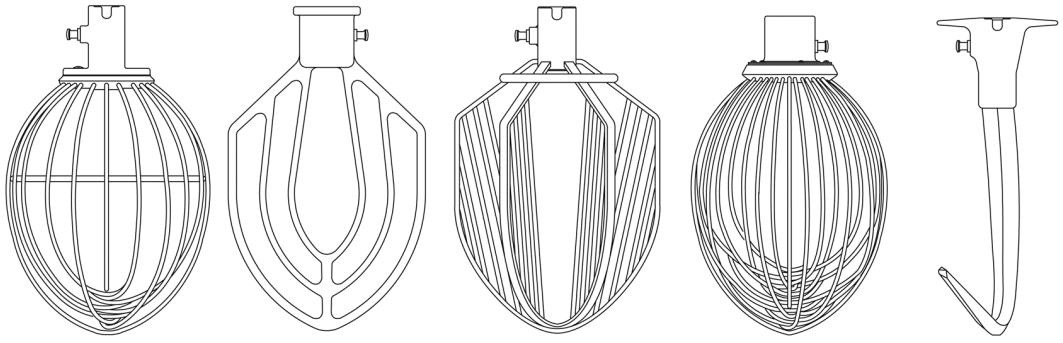

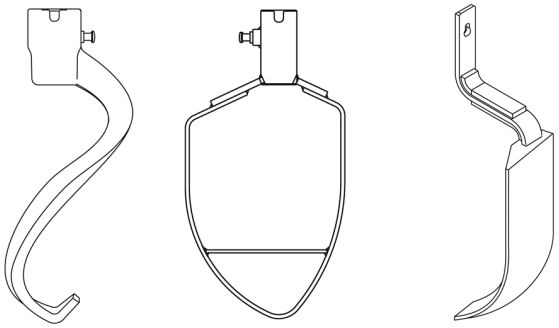

60-QUART AGITATORS

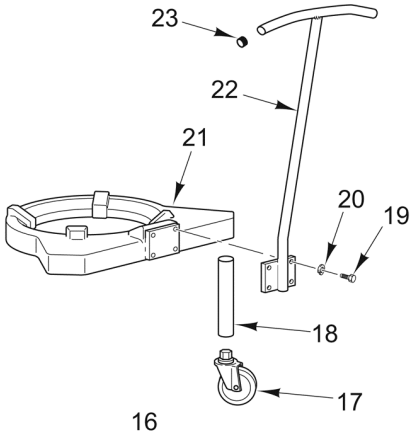

BOWL TRUCK

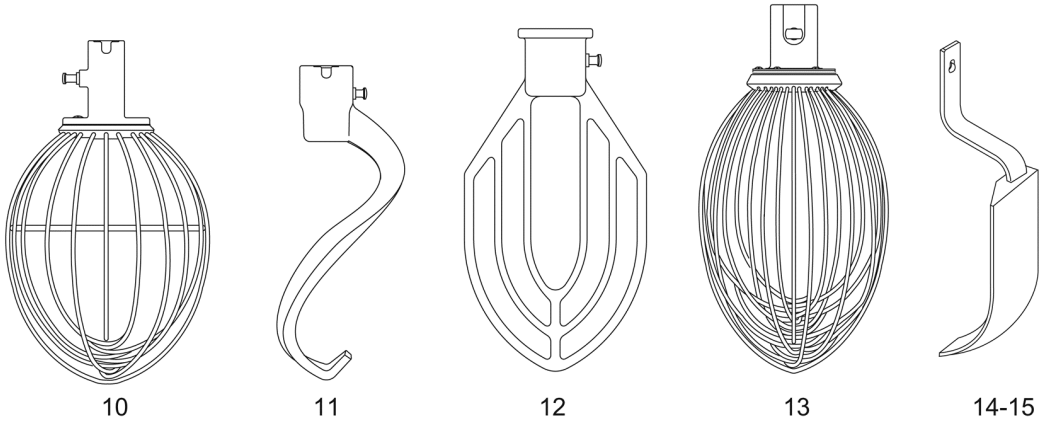

40-QUART AGITATORS

PL-59909

AGITATORS AND ACCESSORIES

AGITATORS AND ACCESSORIES

ILLUS. PL-59909	PART NO.	NAME OF PART	AMT.
1	00-874271	"I" Wire Whip (60 Quart) (Packaged)	1
2	00-874172	"B" Flat Beater (60 Quart) (Packaged)	1
3	00-874278	"C" Six Wing Whip (60 Quart) (Packaged)	1
4	00-874190	"D" Wire Whip (60 Quart) (Packaged)	1
5	00-874284	"E" Dough Arm (60 Quart) (Packaged)	1
6	00-874285	"ED" Dough Arm (60 Quart) (Packaged)	1
7	00-874286	"P" Pastry Knife (60 Quart) (Packaged)	1
8	00-874267	Bowl Scraper (60 Quart) (Packaged) (Incls. Item 9)	1
9	00-435637-00001	Scraper - Bowl (60 Qt.)	1
10	00-874250	"I" Wire Whip (40 Quart) (Packaged)	1
11	00-874292	"ED" Dough Arm (40 Quart) (Packaged)	1
12	00-874248	"B" Flat Beater (40 Quart) (Packaged)	1
13	00-874249	"D" Wire Whip (40 Quart) (Packaged)	1
14	00-874268	Bowl Scraper (40 Quart) (Packaged) (Incls. Item 15)	1
15	00-435637-00004	Scraper - Bowl (40 Qt.)	1
16	00-874203	Bowl Truck (Packaged) (Incls. Items 17 thru 23)	1
17	00-874288	Caster (4 In.)	3
18	00-874287	Leg	3
19	SC-041-02	Cap Screw 1/4-20 x 1 Hex Hd. (SST)	4
20	WL-006-17	Lockwasher 1/4 Helical (SST)	4
21	00-874110-00002	Truck - Bowl	1
22	00-874360	Handle (With Plate)	1
23	00-873322	Grip - Bowl Truck	2
	00-438104-00004	Bowl Extension Assy. (60 Quart) (Packaged)	1
	00-438082	Splash Cover (60 Quart) (Packaged)	1
	00-438081	Splash Cover (40 Quart) (Packaged)	1