CATALOG OF REPLACEMENT PARTS



HCH SERIES COOK & HOLD CABINETS

ML-126354	HCH5
ML-126366	HCH8
ML-126367	HCH16
ML-126368	HCH88

A product of HOBART 701 S. RIDGE AVENUE TROY, OHIO 45374-0001

FORM 43089 (April 2021)

 © HOBART 2021

Table of Contents

5 CABINET AND DOOR
7 CONTROLS AND COMPONENTS
9 POWER BOX

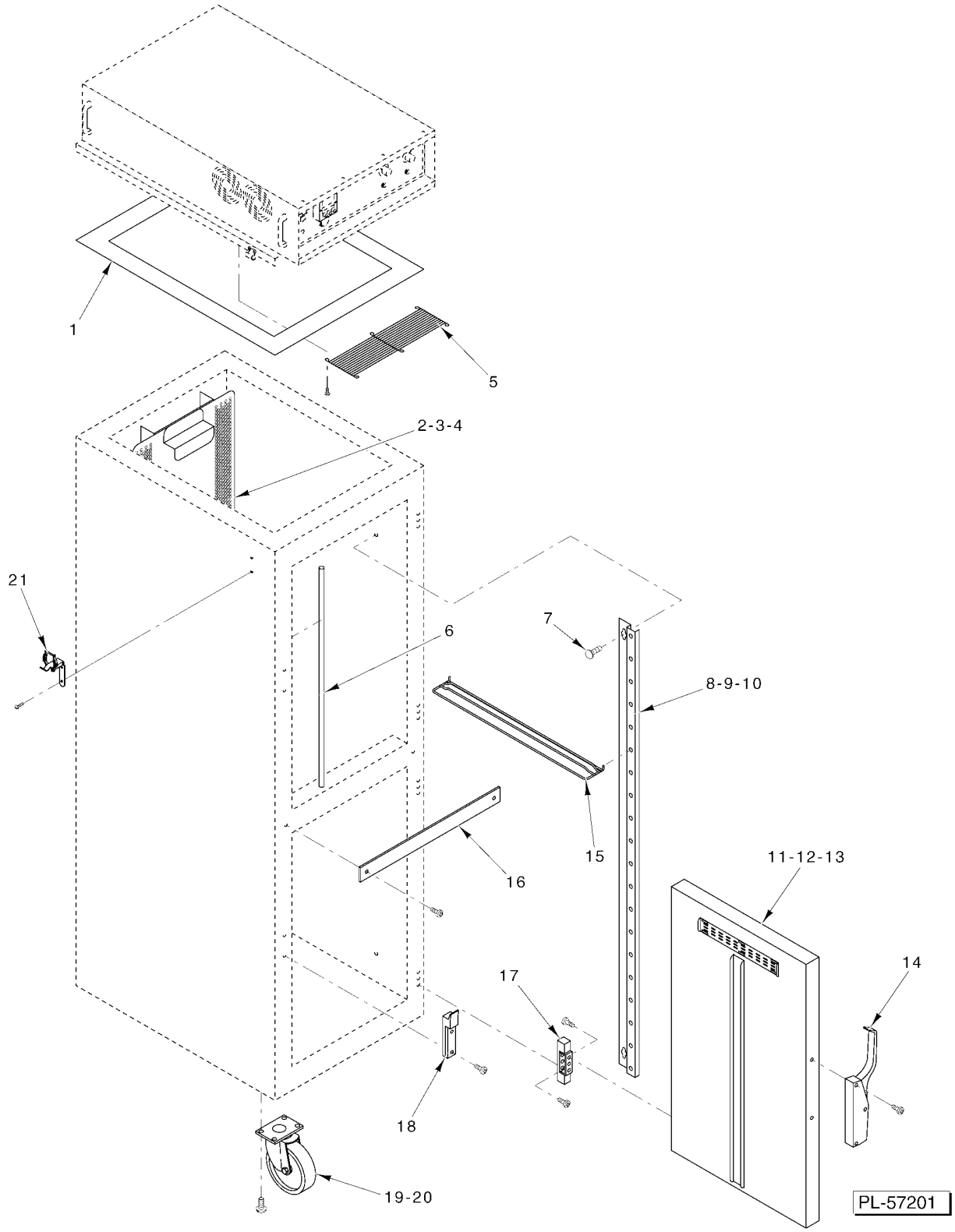

CABINET AND DOOR

CABINET AND DOOR

ILLUS. PL-57201	PART NO.	NAME OF PART	AMT.
1	00-851800-00066	Gasket - Hot Top Seal (Orange)	AR
2	00-851800-00091	NLA - Obsolete--Tunnel - Air Flow (ML-126365)	1
3	00-851800-00092	Tunnel - Air Flow (ML-126366 & ML-126368)	AR
4	00-851800-00093	NLA - Obsolete--Tunnel - Air Flow (ML-126367)	1
5	00-851800-00037	Grate - Blower Air	AR
6	00-851800-00017	Gasket - Door Seal (Black) (Sold Per Foot)	AR
7	00-851800-00026	Bolt - Retaining (Side Rack)	AR
8	00-851800-00333	Support - Rack (ML-126366 & ML-126368)	4
9	00-851800-00334	Support - Rack (ML-126367)	4
10	00-851800-00335	NLA - Obsolete--Support - Rack (ML-126365)	4
11	00-851800-00330	NLA - Obsolete--Door (ML-126366 & ML-126368)	AR
12	00-851800-00331	Door (ML-126367)	1
13	00-851800-00332	Door (ML-126365)	1
14	00-851800-00056	Latch - Door (Incls. Item 18)	AR
15	00-851800-00310	Slide - Universal (Set of 2)	AR
16	00-851800-00329	Bar - Divider (ML-126367)	1
17	00-851800-00018	Hinge - Door	AR
18	00-851800-00055	NLA - Obsolete--Catch - Door	AR
19	00-851800-00038	Caster - Heavy Duty (Rigid)	2
20	00-851800-00039	Caster - Heavy Duty (Swivel W/Brake)	2
21	00-851800-00068	Latch - Spring Load (Incls. Screws)	AR
	00-851800-00063	Gasket - Door (Alum Extrusion) (ML-126365)	1
	00-851800-00064	Gasket - Door (Alum Extrusion) (ML-126366 & ML-126368)	AR
	00-851800-00065	Gasket - Door (Alum Extrusion) (ML-126367)	2

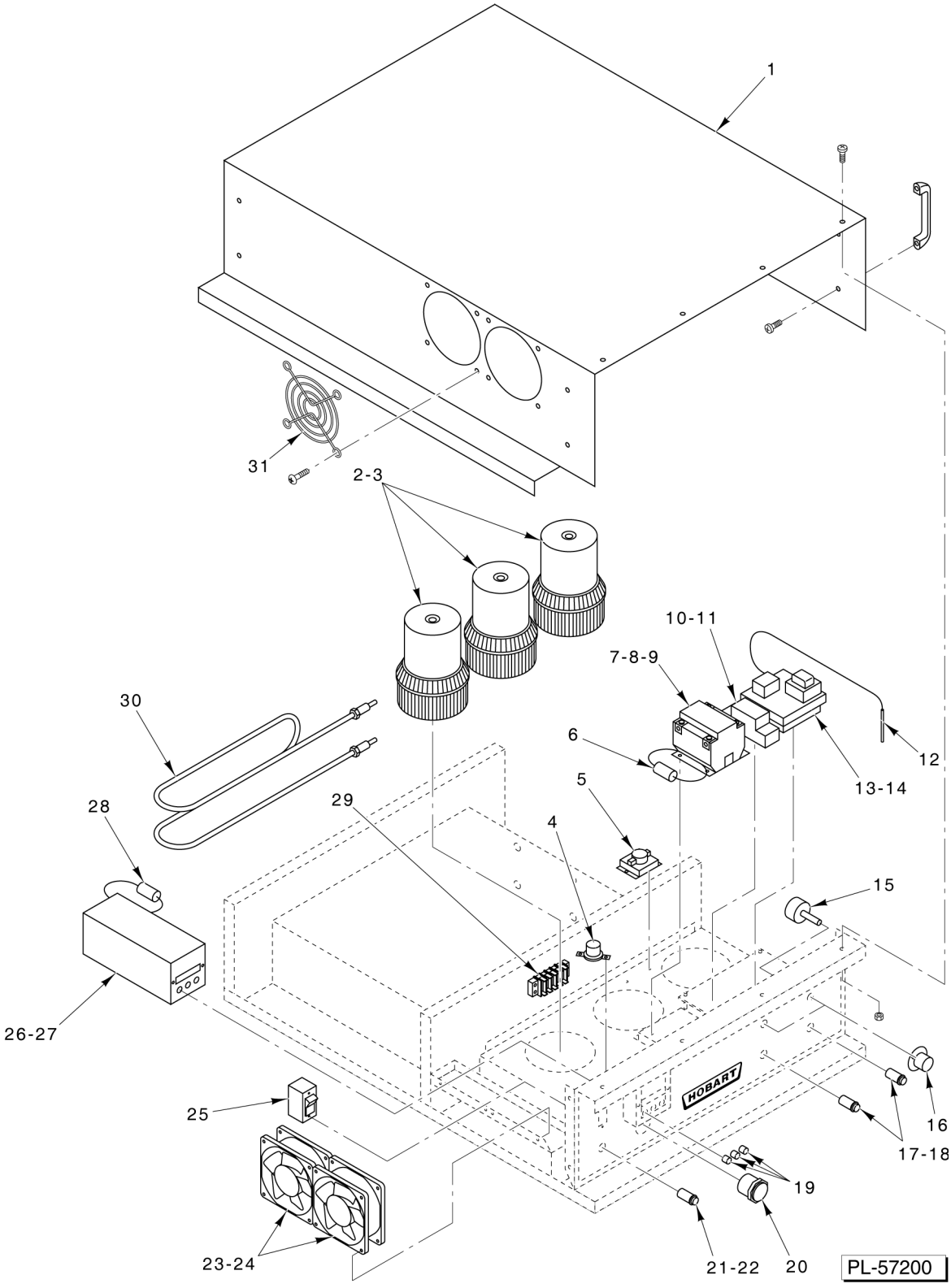

CONTROLS AND COMPONENTS

CONTROLS AND COMPONENTS

ILLUS. PL-57200	PART NO.	NAME OF PART	AMT.
1	00-851800-00043	NLA - Obsolete--Cover - Control Top	AR
2	00-851800-00035	Motor - Blower (120 V.)	AR
3	00-851800-00036	Motor - Blower (208-240 V.)	AR
4	00-851800-00087	Thermostat - Cooling Fan	AR
5	00-851800-00086	Thermostat - Hi-Limit	AR
6	00-851800-00081	Suppressor (Orange)	AR
7	00-851800-00040	Contactor (2 Pole) (120 V.)	AR
8	00-851800-00041	Contactor (2 Pole) (208-240 V.)	AR
9	00-851800-00042	Contactor (3 Pole) (208-240 V.)	AR
10	00-851800-00077	Relay (120 V.)	AR
11	00-851800-00078	Relay (208-240 V.)	AR
12	00-851800-00073	Probe - Air	AR
13	00-851800-00044	NLA - Obsolete--Controller (120 V.)	AR
14	00-851800-00045	Controller (208-240 V.)	AR
15	00-851800-00071	Potentiometer (Set of 2)	AR
16	00-851800-00072	Knob	AR
17	00-851800-00069	Light - Indicator (125 V.)	AR
18	00-851800-00070	Light - Indicator (250 V.)	AR
19	00-851800-00090	Button - Timer (Set of 3)	AR
20	00-851800-00083	Switch - Pushbutton	AR
21	00-851800-00069	Light - Indicator (125 V.)	AR
22	00-851800-00070	Light - Indicator (250 V.)	AR
23	00-851800-00058	Fan - Cooling (120 V.)	AR
24	00-851800-00059	Fan - Cooling (208-240 V.)	AR
25	00-851800-00082	Switch - Rocker	AR
26	00-851800-00088	Timer (120 V.)	AR
27	00-851800-00089	Timer (208-240 V.)	AR
28	00-851800-00081	Suppressor (Orange)	AR
29	00-851800-00084	Block - Terminal	AR
30	00-851800-00057	Element (120/208-240 V.)	AR
31	00-851800-00060	NLA - Obsolete--Screen - Fan	AR
	00-851800-00046	Controller Assy. (120 V.) (Incls. Items 10, 12, 13, & 15)	AR
	00-851800-00047	Controller Assy. (208-240 V.) (Incls. Items 11, 12, 14, & 15)	AR
	00-851800-00588	Thermometer (With Dial) (400 F.)	AR

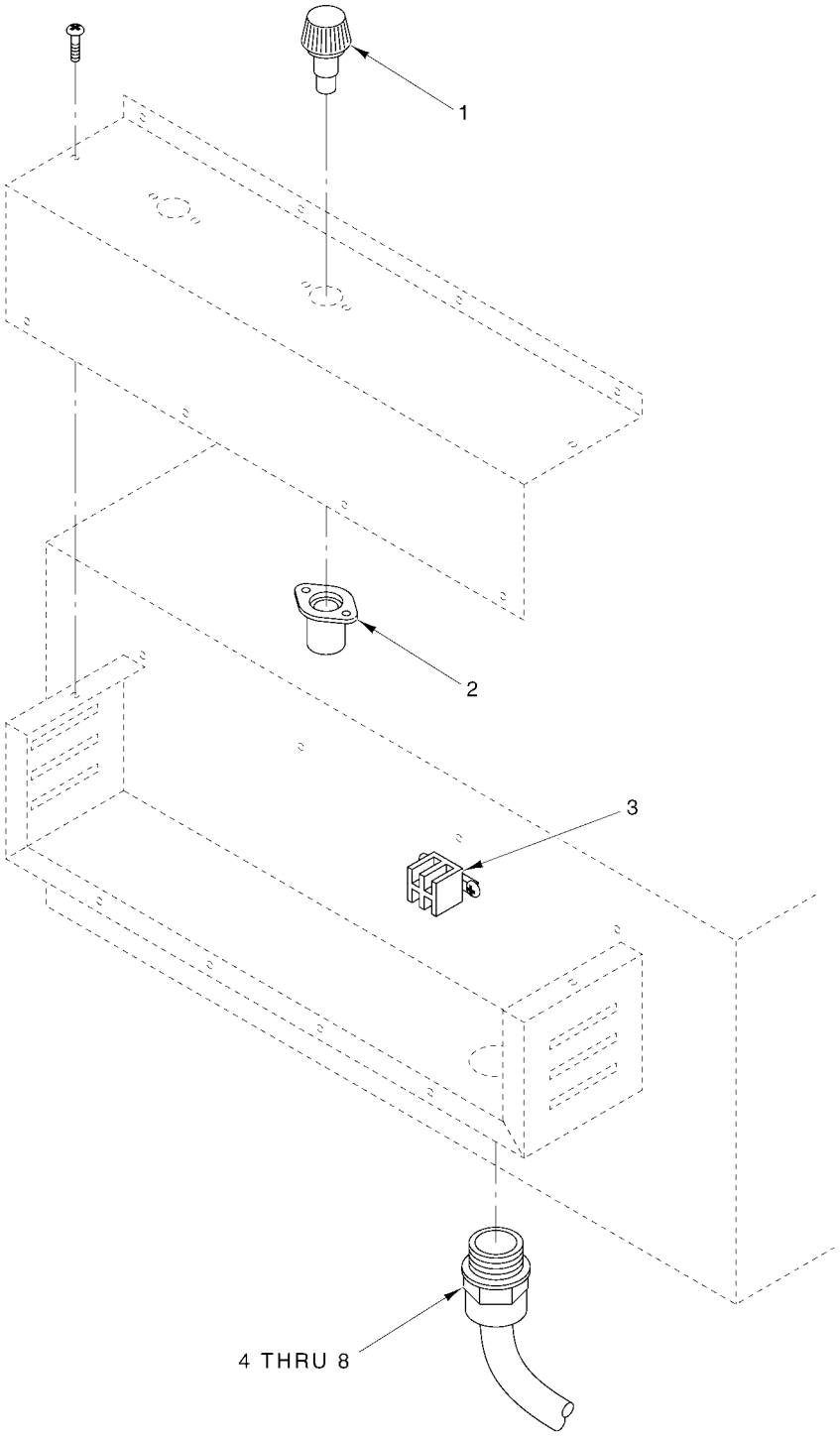

PL-57202

POWER BOX

POWER BOX

ILLUS. PL-57202	PART NO.	NAME OF PART	AMT.
1	00-851800-00062	Fuse (3 Amp.)	AR
2	00-851800-00061	Holder - Fuse	AR
3	00-851800-00085	Block - Terminal	AR
4	00-851800-00048	Cord - Power (6 Ft.) (208 V.) (ML-126365, ML-126366, & ML-126368)	AR
5	00-851800-00049	Cord - Power (6 Ft.) (208 V.) (ML-126367)	1
6	00-851800-00050	NLA - Obsolete--Cord - Power (6 Ft.) (120 V.)	AR
7	00-851800-00080	NLA - Obsolete--Strain - Relief	AR
8	00-851800-00336	Strain - Relief (ML-126367)	1