HOBART

CATALOG OF REPLACEMENT PARTS

ELECTRIC COMBI OVENS

HCE6H	ML-126174
HCE10H	ML-126175
HCE10F	ML-126176
HCE20H	ML-126577
HCE20F	ML-126578







A product of HOBART 701 S. RIDGE AVENUE TROY, OHIO 45374-0001

FORM 43004 Rev. A (November 2006)

 © HOBART

Table of Contents

Page	Description
5	Frame And Panels (6 & 10 Racks)
7	Frame And Panels (20 Racks)
11	Door Assembly (6 Racks)
13	Door Assembly (10 Racks)
15	Door Assembly (20 Racks)
17	Cavity And Heating Element (6 & 10 Racks)
19	Cavity And Heating Element (20 Racks)
21	Boiler Assembly (6 & 10 Racks)
23	Boiler Assembly (20 Half Racks)
25	Boiler Assembly (20 Full Racks)
27	Convection Unit
29	Pipework And Drain (6 & 10 Racks)
31	Pipework And Drain (20 Racks)
33	Cavity Vent
35	Electrical Connection Assembly (6 Levels)
37	Electrical Connection Assembly (10 Levels)
39	Electrical Connection Assembly (20 Levels)
41	Door Interlock
43	Electronic Control Unit (6 & 10 Levels)
45	Electronic Control Unit (20 Levels)
47	Filter And Carriage (6 & 10 Levels)
49	Filter And Carriage (20 Racks)
51	Trolley Assembly (20 Racks)
52	Table Assembly (6 Racks & 10 Half Racks)

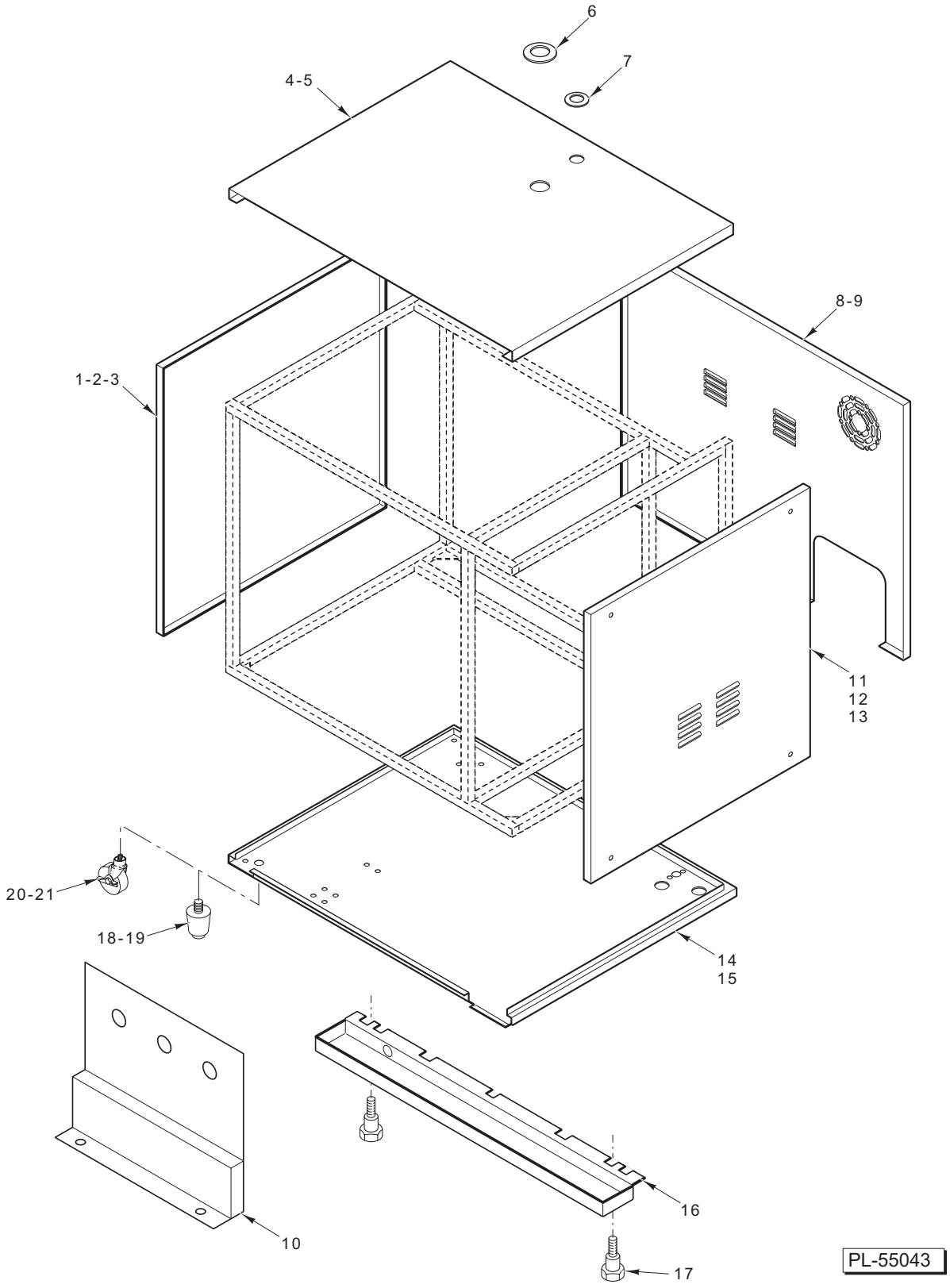

FRAME AND PANELS (6 & 10 RACKS)

FRAME AND PANELS (6 & 10 RACKS)

ILLUS. PL-55043	PART NO.	NAME OF PART	AMT.
1	00-845036-00001	Panel – Left Side (6 Half)	1
2	00-845036-00002	Panel – Left Side (10 Half)	1
3	00-845036-00003	Panel – Left Side (10 Full)	1
4	00-844964-00001	Panel – Top (6 Half & 10 Half)	1
5	00-844964-00002	Panel – Top (10 Full)	1
6	00-492183	Grommet – Cavity Vent Tube	1
7	00-492110	Grommet – Drain Vent Tube	1
8	00-845448-00001	Panel – Back (6 Half)	1
9	00-845448-00002	Panel – Back (10 Half & 10 Full)	1
10	00-845450-00001	Bracket – Electric & Water	1
11	00-845041-00001	Panel – Right Side (6 Half)	1
12	00-845041-00002	Panel – Right Side (10 Half)	1
13	00-845041-00003	Panel – Right Side (10 Full)	1
14	00-845038-00001	Panel – Bottom (6 Half & 10 Half)	1
15	00-845038-00002	Panel – Bottom (10 Full)	1
16	00-480245	Tray – Drip	1
17	00-845475	Thumb Screw	2
18	00-851220-00007	Leg (4 In.) (Flanged)	4
19	00-851220-00005	Leg (6 In.) (Flanged)	4
20	00-851794-00001	Caster (6 In.) (Locking)	2
21	00-851794-00002	Caster (6 In.) (Non-Locking)	2

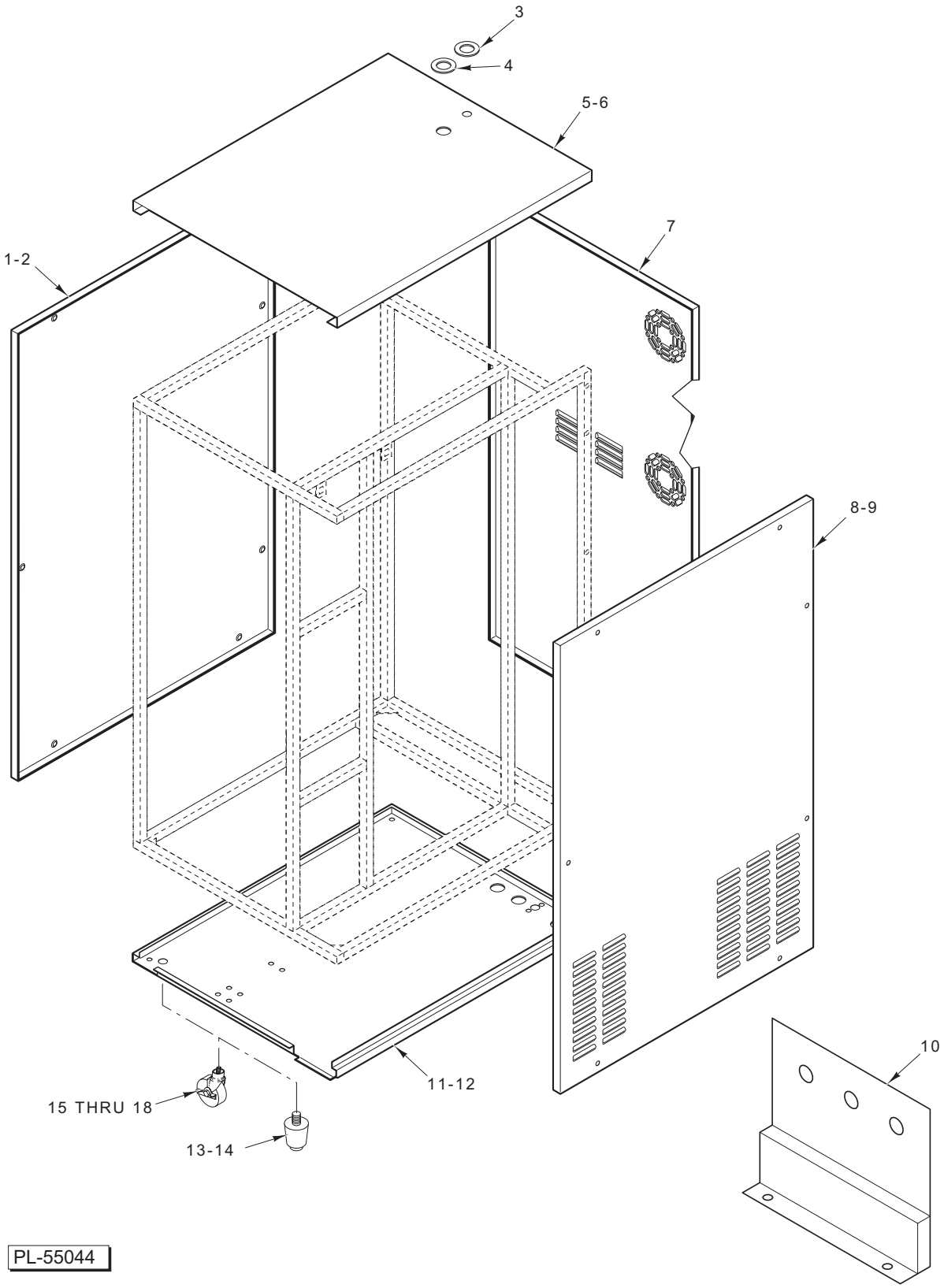

FRAME AND PANELS (20 RACKS)

FRAME AND PANELS (20 RACKS)

ILLUS. PL-55044	PART NO.	NAME OF PART	AMT.
1	00-844963-00001	Panel – Left Side (20 Half)	1
2	00-844963-00002	Panel – Left Side (20 Full)	1
3	00-492110	Grommet – Drain Vent Tube	1
4	00-492183	Grommet – Cavity Vent Tube	1
5	00-844964-00001	Panel – Top (20 Half)	1
6	00-844964-00002	Panel – Top (20 Full)	1
7	00-845448-00003	Panel – Back (20 Half & 20 Full)	1
8	00-844966-00001	Panel – Right Side (20 Half)	1
9	00-844966-00002	Panel – Right Side (20 Full)	1
10	00-845450-00002	Bracket	1
11	00-845038-00001	Panel – Bottom (20 Half)	1
12	00-845038-00002	Panel – Bottom (20 Full)	1
13	00-851220-00003	Leg (7 In.) (With Flange) (20 Half)	4
14	00-851220-00001	Leg (8 1/2 In.) (With Flange) (20 Full)	4
15	00-851220-00009	Caster (7 1/4 In.) (Locking) (20 Half)	2
16	00-851220-00010	Caster (7 1/4 In.) (Non-Locking) (20 Half)	2
17	00-851221-00013	Caster (7 1/4 In.) (Locking) (20 Half)	2
18	00-851221-00014	Caster (8 5/8 In.) (Non-Locking) (20 Full)	2

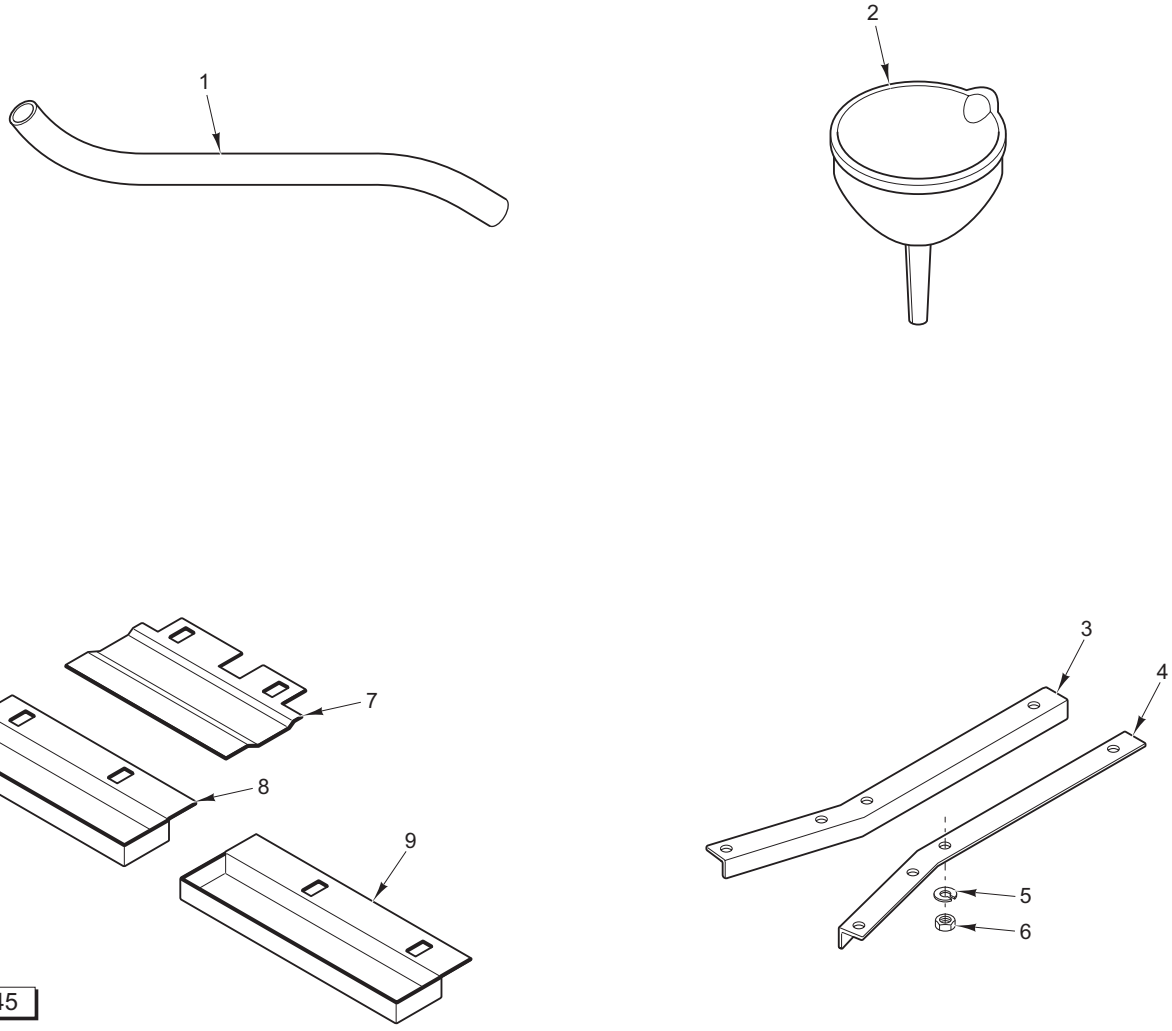

FRAME AND PANELS (20 RACKS) (Cont.)

FRAME AND PANELS (20 RACKS) (Cont.)

ILLUS. PL-55045	PART NO.	NAME OF PART	AMT.
1	00-845458-00002	Tube – Vent	1
2	00-492201	Funnel – Drain	1
3	00-322258	Trolley Guide (LH)	1
4	00-322259	Trolley Guide (RH)	1
5	00-602307	Lockwasher	8
6	00-602491	Nut	8
7	00-492964	Drip Pan (Center)	1
8	00-492965	Drip Pan (Left)	1
9	00-492966	Drip Pan (Right)	1

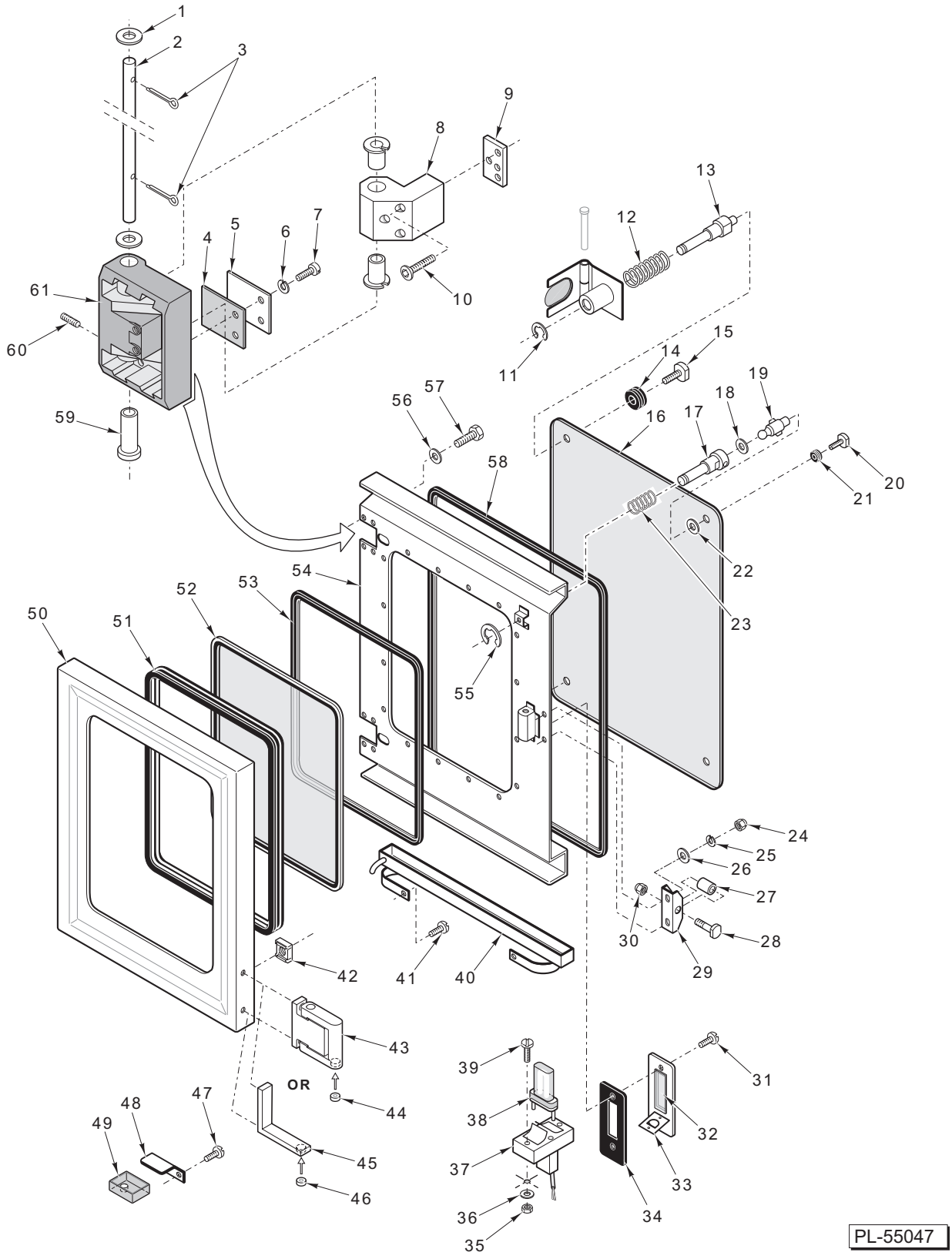

DOOR ASSEMBLY (6 RACKS)

DOOR ASSEMBLY (6 RACKS)

ILLUS. PL-55047	PART NO.	NAME OF PART	AMT.
1	00-602287	Washer	4
2	00-492145-00001	Pin – Hinge	1
3	00-602884	Cotter Pin	4
4	00-492148	Spacer – Door	2
5	00-492043	Plate	2
6	00-602307	Lockwasher	2
7	SC-200-15	Cap Screw M4 x 0.7 x 10 mm Soc. Hex Hd.	4
8	00-492147	Hinge	2
9	00-844766	Plate – Spacer	2
10	SC-200-17	Cap Screw M4 x 0.7 x 12 mm Soc. Hex Hd.	3
11	RR-010-18	Retaining Ring	1
12	00-492155	Spring	4
13	00-845199	Stud	2
14	00-491760	Gasket	4
15	00-844986	Thumb Screw	4
16	00-492438	Inner Door Glass	1
17	00-845375	Shaft	2
18	00-845377	Washer	2
19	00-845392-00001	Shaft – Pivot	2
20	00-844986	Thumb Screw	4
21	00-491760	Gasket	1
22	WS-030-57	Washer	2
23	00-492155	Spring	4
24	NS-047-29	Acorn Nut M8 x 1.25	2
25	WL-019-70	Lockwasher M8 Helical	2
26	WS-004-18	Washer	2
27	00-844941	Bushing	1
28	00-844940	Screw	1
29	00-845044	Catch – Door	1
30	NS-047-34	Acorn Nut M6 x 1	1
31	SC-118-67	Cap Screw M6 x 1 x 10 mm Soc. Hex Hd.	2
32	00-494058	Door Lamp Glass	1
33	00-845453	Door Lamp Cover	1
34	00-494059	Gasket – Door Light	1
35	NS-048-68	Nut M6 x 1 Hex	3
36	WS-030-01	Washer	3
37	00-494045	Socket	1
38	00-844952	Lamp (20W/12VAC)	1
39	SC-118-67	Cap Screw M6 x 1 x 10 mm Soc. Hex Hd.	3
40	00-492053	Tray – Drip	1
41	SC-120-54	Cap Screw M8 x 1.25 x 10 mm Soc. Hex Hd.	2
42	00-149926-00005	Nut Plate	2
43	00-494203-00001	Handle – Door	1
44	00-170016	Magnet	1
45	00-480074	Door Handle (For Stacked Unit)(Lower Machine Only)	1
46	00-170016	Magnet	1
47	SC-120-54	Cap Screw M8 x 1.25 x 10 mm Soc. Hex Hd.	1
48	00-844729	Bracket	1
49	00-492440	Drip Tray Diverter	1
50	00-845452-00001	Panel – Door Outer	1
51	00-150444-00018	Gasket	1
52	00-492917	Window – External	1
53	00-492497	Outer Door Gasket	1
54	00-845451-00001	Panel – Door Inner	1
55	RR-010-18	Retaining Ring	2
56	WS-004-18	Washer	2
57	SC-120-54	Cap Screw M8 x 1.25 x 10 mm Soc. Hex Hd.	2
58	00-492439	Inner Door Gasket	1
59	00-492215	Bushing	2
60	SC-117-35	Set Screw M6 x 1 x 10 mm Hex Hdls. Cup Pt.	1
61	00-492146	Hinge	2

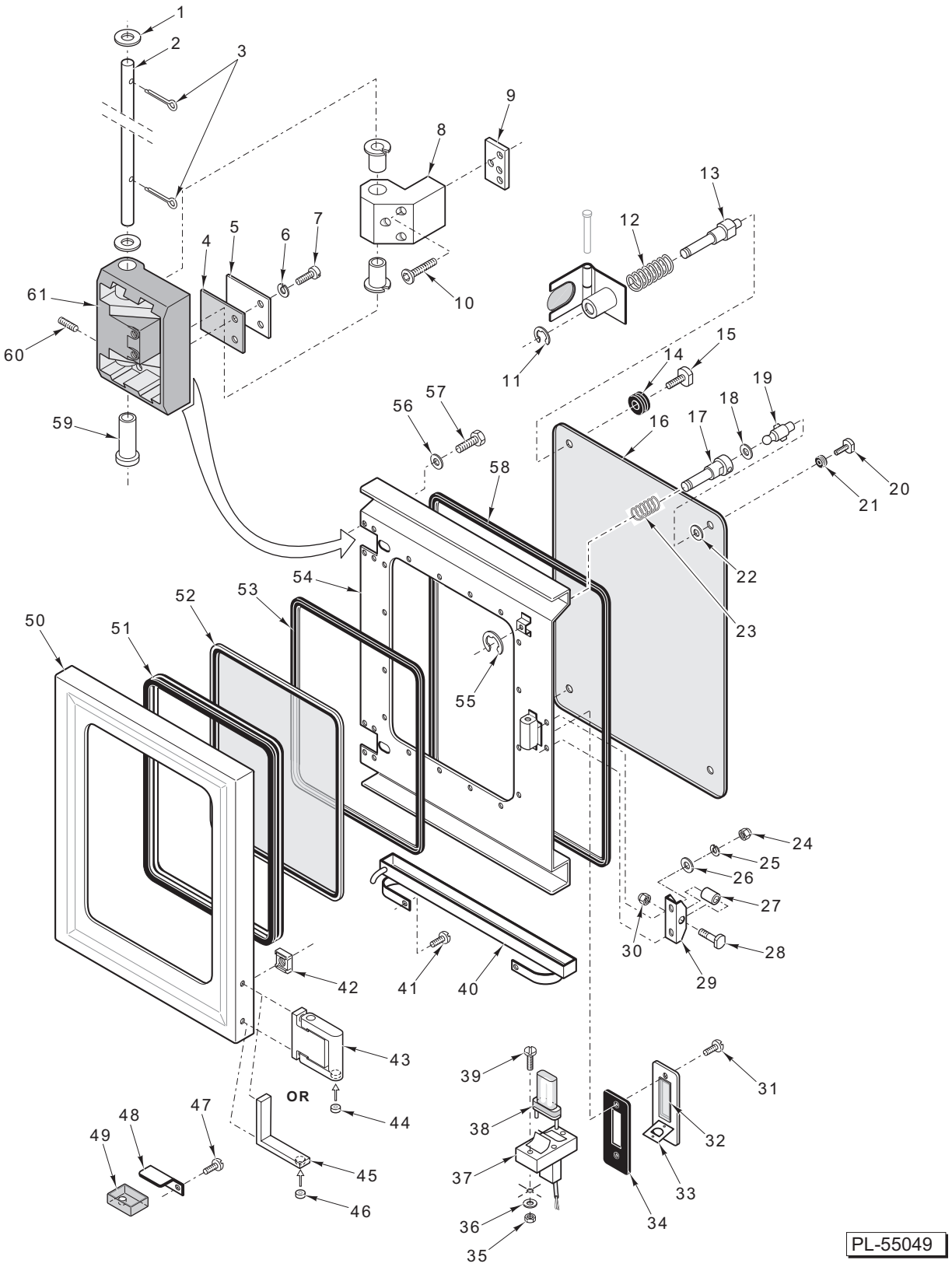

DOOR ASSEMBLY (10 RACKS)

DOOR ASSEMBLY (10 RACKS)

ILLUS. PL-55049	PART NO.	NAME OF PART	AMT.
1	00-602287	Washer	4
2	00-492145-00002	Pin – Hinge	1
3	00-602884	Cotter Pin	4
4	00-492148	Spacer – Door	2
5	00-492043	Plate	2
6	00-602307	Lockwasher	2
7	SC-200-15	Cap Screw M4 x 0.7 x 10 mm Soc. Hex Hd.	2
8	00-492147	Hinge	2
9	00-844766	Plate – Spacer	1
10	SC-200-17	Cap Screw M4 x 0.7 x 12 mm Soc. Hex Hd.	3
11	RR-010-18	Retaining Ring	1
12	00-492155	Spring	4
13	00-845199	Stud	4
14	00-491760	Gasket	2
15	00-844986	Thumb Screw	2
16	00-492465	Inner Door Glass	1
17	00-845375	Shaft	2
18	00-845377	Washer	2
19	00-845392-00001	Shaft – Pivot	2
20	00-844986	Thumb Screw	2
21	00-491760	Gasket	2
22	WS-030-57	Washer	2
23	00-492155	Spring	2
24	NS-047-29	Acorn Nut M8 x 1.25	2
25	WL-019-70	Lockwasher M8 Helical	2
26	WS-004-18	Washer	2
27	00-844941	Bushing	1
28	00-844940	Screw	1
29	00-845044	Catch – Door	1
30	NS-047-34	Acorn Nut M6 x 1	1
31	SC-118-67	Cap Screw M6 x 1 x 10 mm Soc. Hex Hd.	2
32	00-494058	Door Lamp Glass	1
33	00-845453	Door Lamp Cover	1
34	00-494059	Gasket – Door Light	1
35	NS-048-68	Nut M6 x 1 Hex	3
36	WS-030-01	Washer	3
37	00-494045	Socket	1
38	00-844952	Lamp (20W/12VAC)	1
39	SC-118-67	Cap Screw M6 x 1 x 10 mm Soc. Hex Hd.	3
40	00-492053	Tray – Drip	1
41	SC-120-54	Cap Screw M8 x 1.25 x 10 mm Soc. Hex Hd.	2
42	00-149926-00005	Nut Plate	2
43	00-494203-00001	Handle – Door	1
44	00-170016	Magnet	1
45	00-480074	Door Handle (For Stacked Units)(Lower Machine Only)	1
46	00-170016	Magnet	1
47	SC-120-54	Cap Screw M8 x 1.25 x 10 mm Soc. Hex Hd.	1
48	00-844729	Bracket	1
49	00-492440	Drip Tray Diverter	1
50	00-845452-00002	Panel – Door Outer	1
51	00-492462	Gasket	1
52	00-492937	Window – External	1
53	00-149915-00002	Outer Door Gasket	1
54	00-845451-00002	Panel – Door Inner	1
55	RR-010-18	Retaining Ring	2
56	WS-004-18	Washer	2
57	SC-120-54	Cap Screw M8 x 1.25 x 10 mm Soc. Hex Hd.	2
58	00-492466	Inner Door Gasket	1
59	00-492215	Bushing	1
60	SC-117-35	Set Screw M6 x 1 x 10 mm Hex Hdls. Cup Pt.	1
61	00-492146	Hinge	2

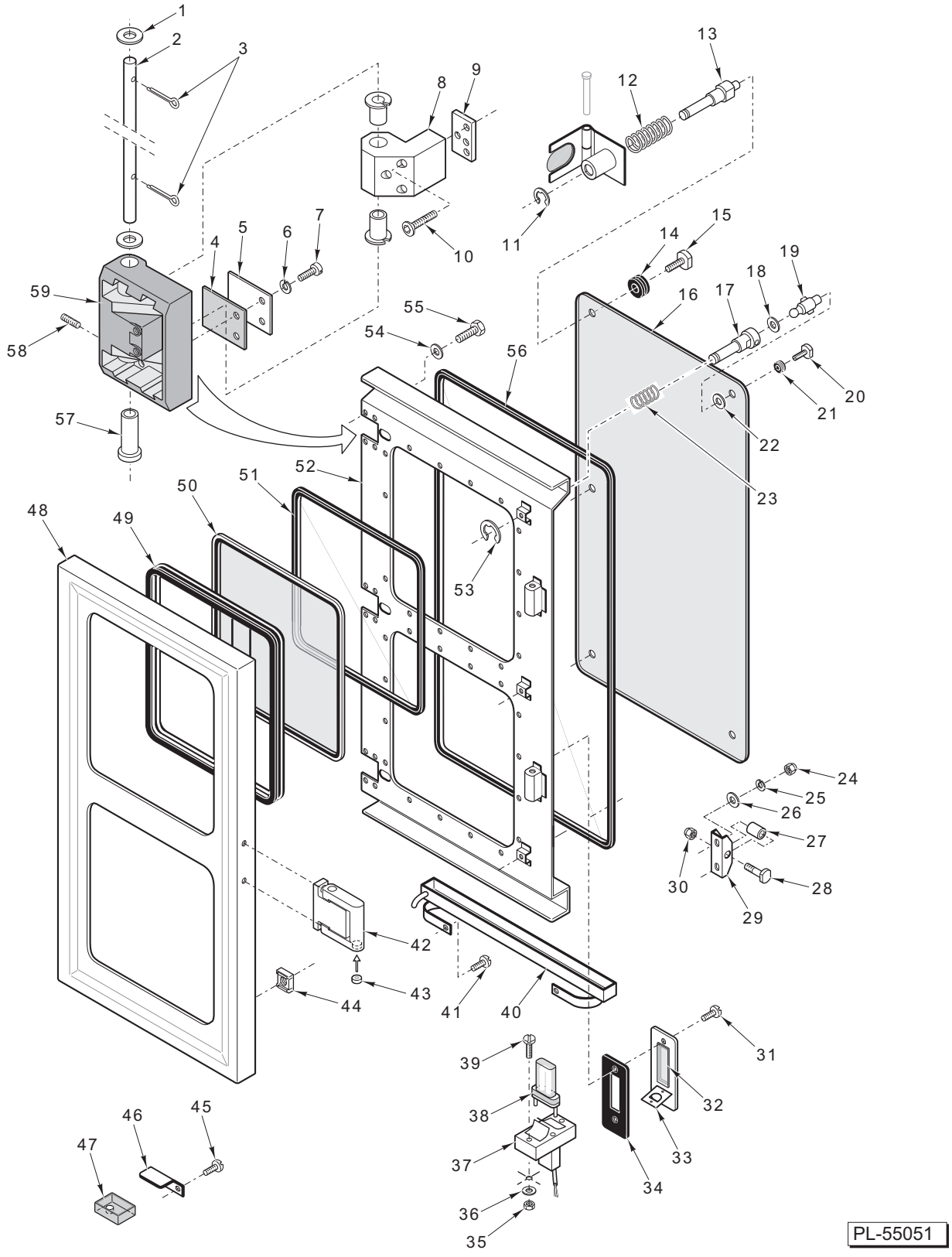

DOOR ASSEMBLY (20 RACKS)

DOOR ASSEMBLY (20 RACKS)

ILLUS. PL-55051	PART NO.	NAME OF PART	AMT.
1	00-602287	Washer	6
2	00-492145-00003	Pin – Hinge	1
3	00-602884	Cotter Pin	6
4	00-492148	Spacer – Door	3
5	00-492043	Plate	3
6	00-602307	Lockwasher	2
7	SC-200-15	Cap Screw M4 x 0.7 x 10 mm Soc. Hex Hd.	2
8	00-492147	Hinge	3
9	00-844766	Plate – Spacer	1
10	SC-200-17	Cap Screw M4 x 0.7 x 12 mm Soc. Hex Hd.	3
11	RR-010-18	Retaining Ring	2
12	00-153294-00001	Spring	5
13	00-845199	Stud	3
14	00-491760	Gasket	5
15	00-844986	Thumb Screw	5
16	00-491756	Inner Door Glass	1
17	00-845375	Shaft	2
18	00-845377	Washer	2
19	00-845392-00001	Shaft – Pivot	2
20	00-844986	Thumb Screw	3
21	00-491760	Gasket	3
22	WS-030-57	Washer	3
23	00-153294-00001	Spring	3
24	NS-047-29	Acorn Nut M8 x 1.25	2
25	WL-019-70	Lockwasher M8 Helical	2
26	WS-004-18	Washer	2
27	00-844941	Bushing	2
28	00-844940	Screw	2
29	00-845016	Catch – Door	2
30	NS-048-68	Nut M6 x 1 Hex	1
31	WS-030-01	Screw	2
32	00-494058	Door Lamp Glass	2
33	00-845453	Door Lamp Cover	2
34	00-494059	Gasket – Door Light	2
35	NS-048-68	Nut M6 x 1 Hex	3
36	WS-030-01	Washer	3
37	00-494045	Socket	2
38	00-844952	Lamp (20W/12VAC)	2
39	SC-118-67	Cap Screw M6 x 1 x 10 mm Soc. Hex Hd.	3
40	00-492053	Tray – Drip	1
41	SC-120-54	Cap Screw M8 x 1.25 x 10 mm Soc. Hex Hd.	2
42	00-494203-00001	Handle – Door	1
43	00-170016	Magnet	1
44	00-149926-00005	Nut Plate	3
45	SC-120-54	Cap Screw M8 x 1.25 x 10 mm Soc. Hex Hd.	1
46	00-844729	Bracket	1
47	00-492440	Drip Tray Diverter	1
48	00-845452-00003	Panel – Door Outer	1
49	00-492462	Gasket	2
50	00-492937	Window – External	2
51	00-149915-00002	Outer Door Gasket	2
52	00-845451-00003	Panel – Door Inner	1
53	RR-010-18	Retaining Ring	2
54	WS-004-18	Washer	2
55	SC-120-54	Cap Screw M8 x 1.25 x 10 mm Soc. Hex Hd.	2
56	00-491759	Inner Door Gasket	1
57	00-492215	Bushing	3
58	SC-117-35	Set Screw M6 x 1 x 10 mm Hex Hdls. Cup Pt.	1
59	00-492146	Hinge	3

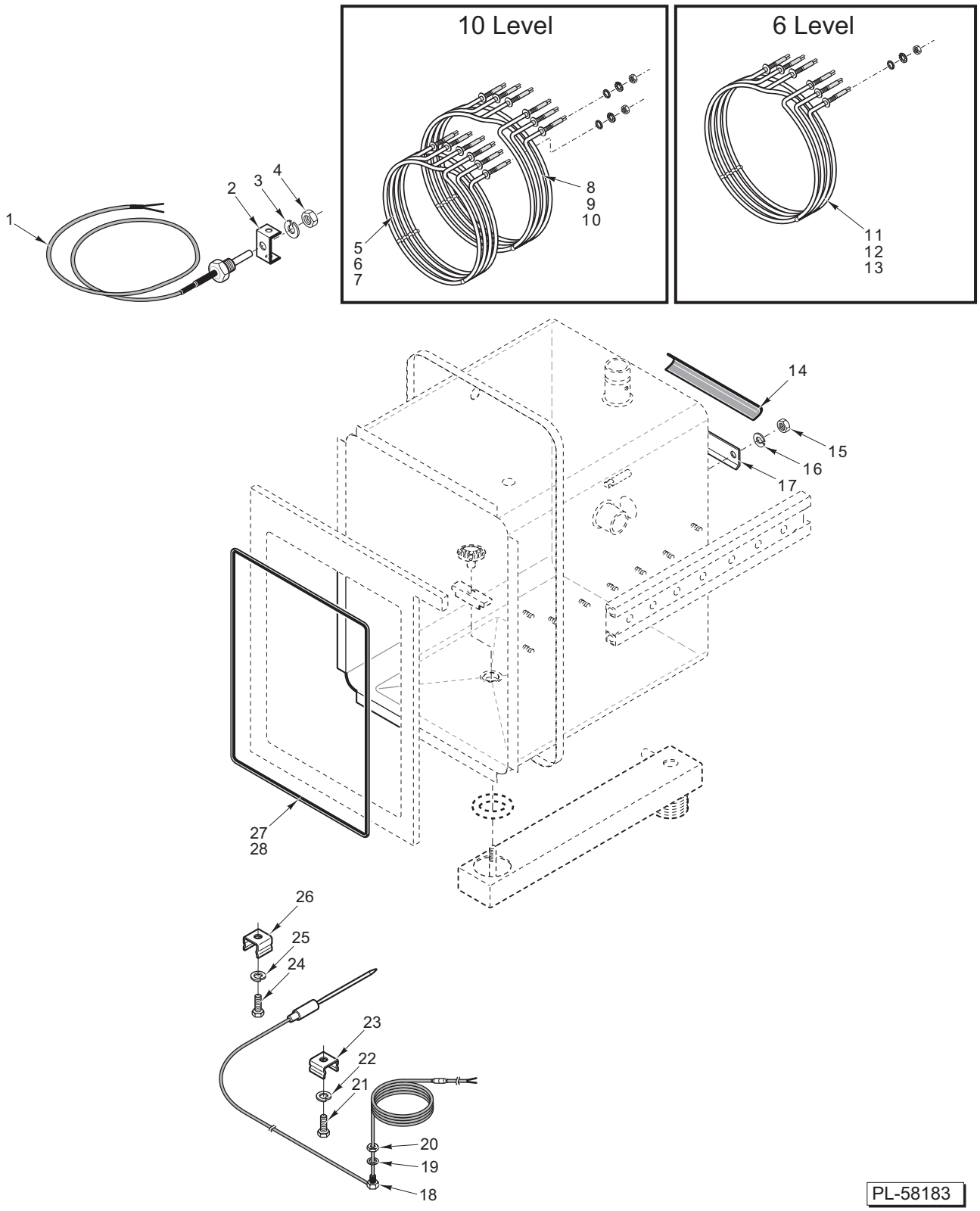

CAVITY AND HEATING ELEMENT (6 & 10 RACKS)

CAVITY AND HEATING ELEMENT (6 & 10 RACKS)

ILLUS. PL-58183	PART NO.	NAME OF PART	AMT.
1	00-492997	Thermocouple	1
2	00-322270	Bracket	1
3	WL-019-70	Lockwasher M8 Helical	1
4	NS-048-83	Jam Nut M10 x 1.5	1
5	00-844947-00004	Element Inner – Heating (10 Racks – 208 V.)	1
6	00-844947-00002	Element Inner – Heating (10 Racks – 240 V.)	1
7	00-844947-00003	Element Inner – Heating (10 Racks – 480 V.)	1
8	00-844948-00004	Element Outer – Heating (10 Racks – 208 V.)	1
9	00-844948-00002	Element Outer – Heating (10 Racks – 240 V.)	1
10	00-844948-00003	Element Outer – Heating (10 Racks – 480 V.)	1
11	00-845389-00001	Element – Heating (6 Racks – 208 V.)	1
12	00-844954-00001	Element – Heating (6 Racks – 240 V.)	1
13	00-845389-00003	Element – Heating (6 Racks – 480 V.)	1
14	00-153333	Insulator – High Limit Bulb	1
15	NS-048-83	Jam Nut M10 x 1.5	2
16	WL-019-70	Lockwasher M8 Helical	2
17	00-322194	Bracket – High Limit Probe	1
18	00-844919-00004	Probe – Thermocouple Meat (J 4 mm)	1
19	00-845404	Gasket	1
20	NS-048-83	Jam Nut M10 x 1.5	1
21	SC-118-67	Cap Screw M6 x 1 x 10 mm Soc. Hex Hd.	1
22	WL-019-70	Lockwasher M8 Helical	1
23	00-845365-00002	Clip – Meat Probe Holder	1
24	SC-118-67	Cap Screw M6 x 1 x 10 mm Soc. Hex Hd.	1
25	WL-019-70	Lockwasher	1
26	00-845365-00001	Clip – Meat Probe Holder	1
27	00-492418	Gasket – Cavity Face Seal (6 Racks)	1
28	00-492455	Gasket – Cavity Face Seal (10 Racks)	1

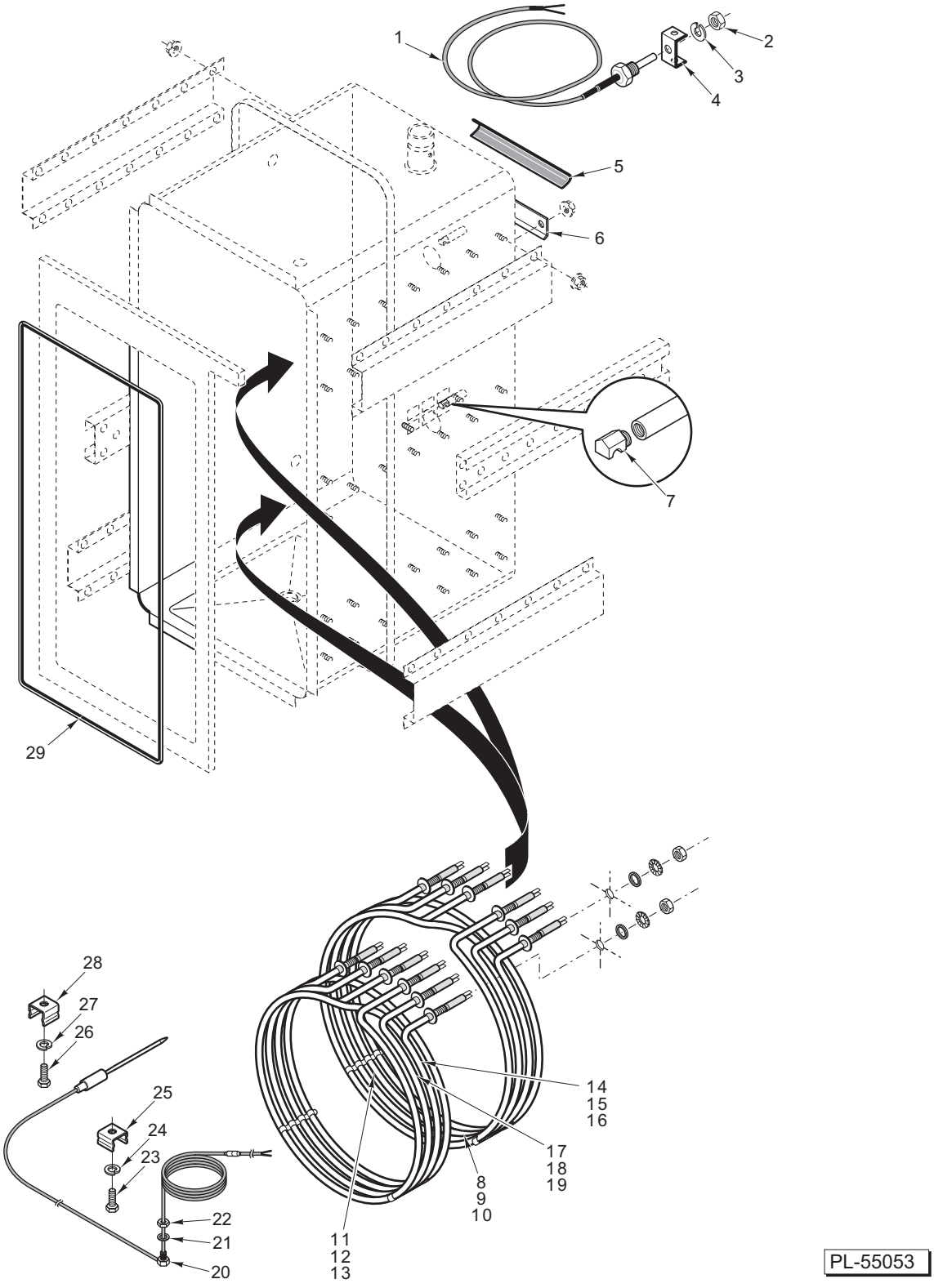

CAVITY AND HEATING ELEMENT (20 RACKS)

CAVITY AND HEATING ELEMENT (20 RACKS)

ILLUS. PL-55053	PART NO.	NAME OF PART	AMT.
1	00-492997	Thermocouple	2
2	NS-048-83	Jam Nut M10 x 1.5	1
3	WL-019-70	Lockwasher M8 Helical	1
4	00-322270	Bracket	1
5	00-153333	Insulator – High Limit Bulb	2
6	00-322194	Bracket – High Limit Probe	1
7	00-148271	Humidifier Nozzle	2
8	00-844948-00005	Element – Heating (20H Rack – 208 V.)	2
9	00-844948-00001	Element – Heating (20H Rack – 240 V.)	2
10	00-844948-00006	Element – Heating (20H Rack – 480 V.)	2
11	00-844948-00004	Element – Heating (20F Rack – 208 V.)	2
12	00-844948-00002	Element – Heating (20F Rack – 240 V.)	2
13	00-844948-00003	Element – Heating (20F Rack – 480 V.)	2
14	00-844947-00005	Element – Heating (20H Rack – 208 V.)	2
15	00-844947-00001	Element – Heating (20H Rack – 240 V.)	2
16	00-844947-00006	Element – Heating (20H Rack – 480 V.)	2
17	00-844947-00004	Element – Heating (20F Rack – 208 V.)	2
18	00-844947-00002	Element – Heating (20F Rack – 240 V.)	2
19	00-844947-00003	Element – Heating (20F Rack – 480 V.)	2
20	00-844919-00004	Probe – Thermocouple Meat (J 4 mm)	1
21	00-845404	Gasket	1
22	NS-048-83	Jam Nut M10 x 1.5	1
23	SC-118-67	Cap Screw M6 x 1 x 10 mm Soc. Hex Hd.	1
24	WL-019-70	Lockwasher M8 Helical	1
25	00-845365-00002	Clip – Meat Probe Holder	1
26	SC-118-67	Cap Screw M6 x 1 x 10 mm Soc. Hex Hd.	1
27	WL-019-70	Lockwasher M8 Helical	1
28	00-845365-00001	Clip – Meat Probe Holder	1
29	00-491770	Gasket – Cavity Face Seal	1

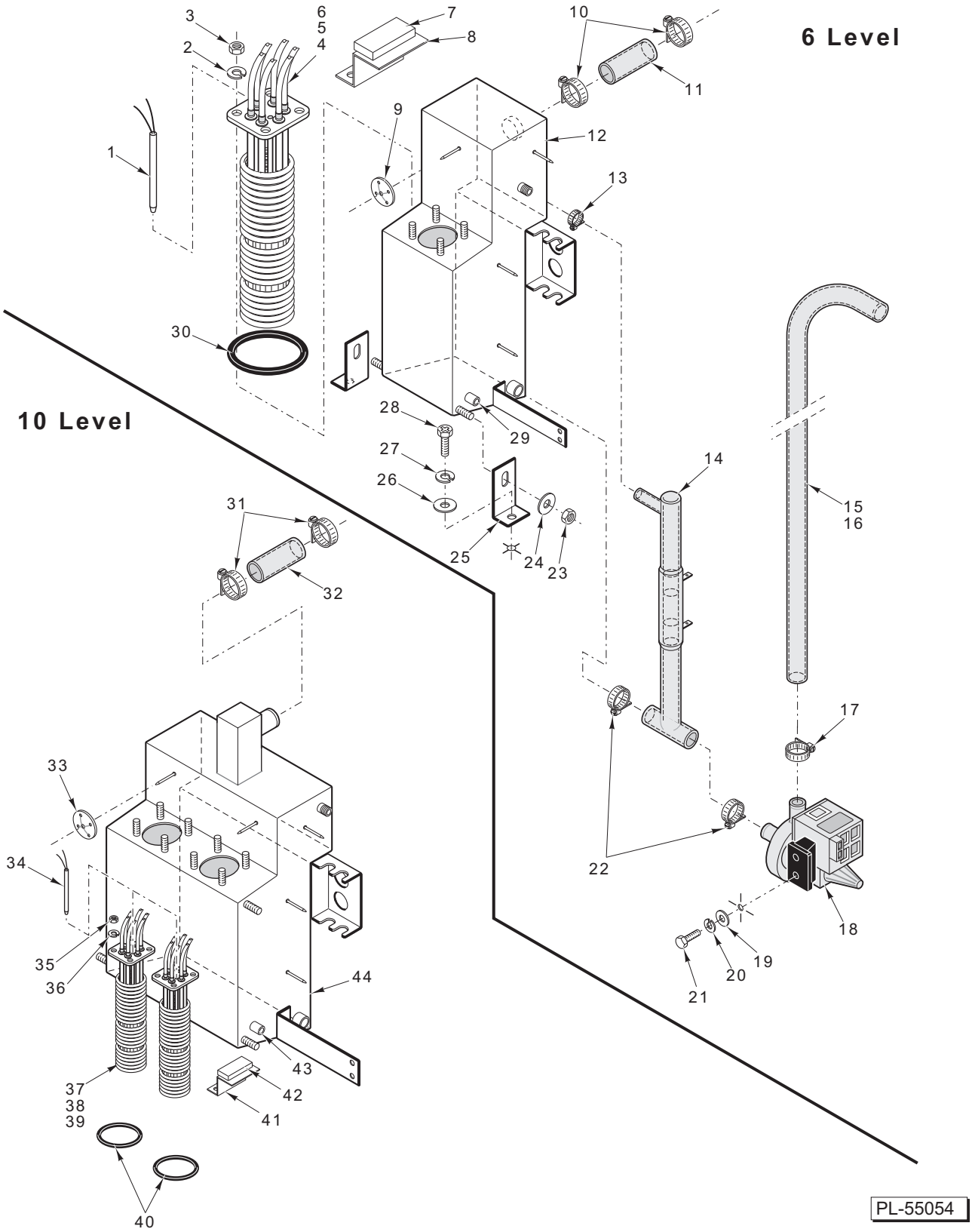

BOILER ASSEMBLY (6 & 10 RACKS)

BOILER ASSEMBLY (6 & 10 RACKS)

ILLUS. PL-55054	PART NO.	NAME OF PART	AMT. Half	AMT. Full
1	00-845525-00001	Thermal Fuse	1	-
2	00-602305	Lockwasher	4	8
3	00-602492	Nut	4	8
4	00-845370-00009	Element – Heating (208 V.)	1	-
5	00-845370-00011	Element – Heating (240 V.)	1	-
6	00-845370-00013	Element – Heating (480 V.)	1	-
7	00-845532	Terminal Block	1	-
8	00-845529	Terminal Bracket	1	-
9	00-233924-00001	Clip	AR	AR
10	00-149978-00001	Clamp – Hose	2	2
11	00-492144-00007	Hose	1	1
12	00-845047-00001	Steam Generator (6 Level)	1	1
13	00-844983-00002	Clamp – Hose	1	1
14	00-845004	Water Level Probe Tube	1	1
15	00-845185-00004	Drain Tube (6 Level)	1	1
16	00-845185-00006	Drain Tube (10 Level)	1	1
17	00-149978-00001	Clamp – Hose	1	1
18	00-845455-00001	Drain Pump	1	1
19	WS-004-18	Washer	2	2
20	WL-019-70	Lockwasher M8 Helical	2	2
21	SC-120-54	Cap Screw M8 x 1.25 x 10 mm Soc. Hex Hd.	2	2
22	00-844983-00001	Clamp – Hose	2	2
23	NS-048-83	Jam Nut M10 x 1.5	1	1
24	WS-004-18	Washer	1	1
25	00-492806	Bracket	2	2
26	WS-004-18	Washer	1	1
27	WL-019-70	Lockwasher M8 Helical	1	1
28	SC-120-54	Cap Screw M8 x 1.25 x 10 mm Soc. Hex Hd.	1	-
29	00-845378	Connector – Washer Inlet	1	1
30	00-233982-00001	Gasket	1	-
31	00-149978-00001	Clamp – Hose	2	2
32	00-492144-00009	Hose	1	1
33	00-233924-00001	Clip	1	1
34	00-845525-00001	Thermal Fuse	2	2
35	00-602492	Nut	4	8
36	00-602305	Lockwasher	4	8
37	00-845370-00009	Element – Heating (208 V.)	2	2
38	00-845370-00011	Element – Heating (240 V.)	2	2
39	00-845370-00013	Element – Heating (480 V.)	2	2
40	00-233982-00001	Gasket	2	2
41	00-845529	Terminal Bracket	2	2
42	00-845532	Terminal Block	2	2
43	00-845378	Connector – Washer Inlet	1	1
44	00-845047-00003	Steam Generator (10 Level)	1	1

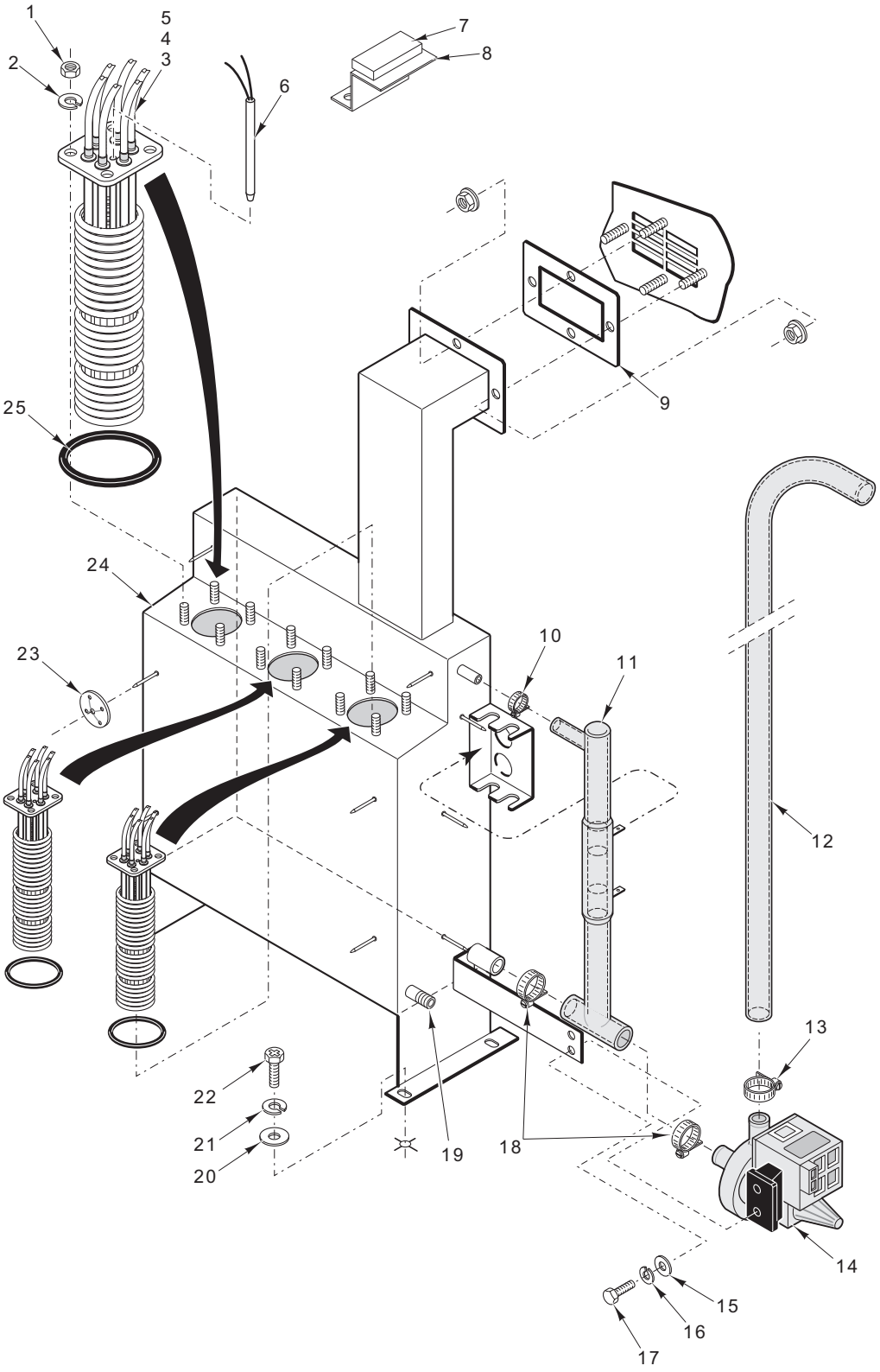

PL-55055

BOILER ASSEMBLY (20 HALF RACKS)

BOILER ASSEMBLY (20 HALF RACKS)

ILLUS. PL-55055	PART NO.	NAME OF PART	AMT.
1	00-602492	Nut	12
2	00-602305	Lockwasher	12
3	00-845370-00009	Element – Heating (208 V.)	3
4	00-845370-00011	Element – Heating (240 V.)	3
5	00-845370-00013	Element – Heating (480 V.)	3
6	00-845525-00001	Thermal Fuse	3
7	00-845532	Terminal Block	3
8	00-845529	Terminal Bracket	3
9	00-492087	Gasket	1
10	00-844983-00002	Clamp – Hose	1
11	00-845004	Tube	1
12	00-844672-00003	Hose	1
13	00-149978-00001	Clamp – Hose	1
14	00-845455-00001	Pump – Valve	1
15	WS-004-18	Washer	2
16	WL-019-70	Lockwasher M8 Helical	2
17	SC-120-54	Cap Screw M8 x 1.25 x 10 mm Soc. Hex Hd.	2
18	00-149978-00001	Clamp – Hose	2
19	00-845378	Connector – Water inlet	1
20	WS-004-18	Washer	2
21	WL-019-70	Lockwasher M8 Helical	2
22	SC-120-54	Cap Screw M8 x 1.25 x 10 mm Soc. Hex Hd.	2
23	00-233924-00001	Clip	AR
24	00-844974-00001	Steam Generator (20H)	1
25	00-233982-00001	Gasket	3

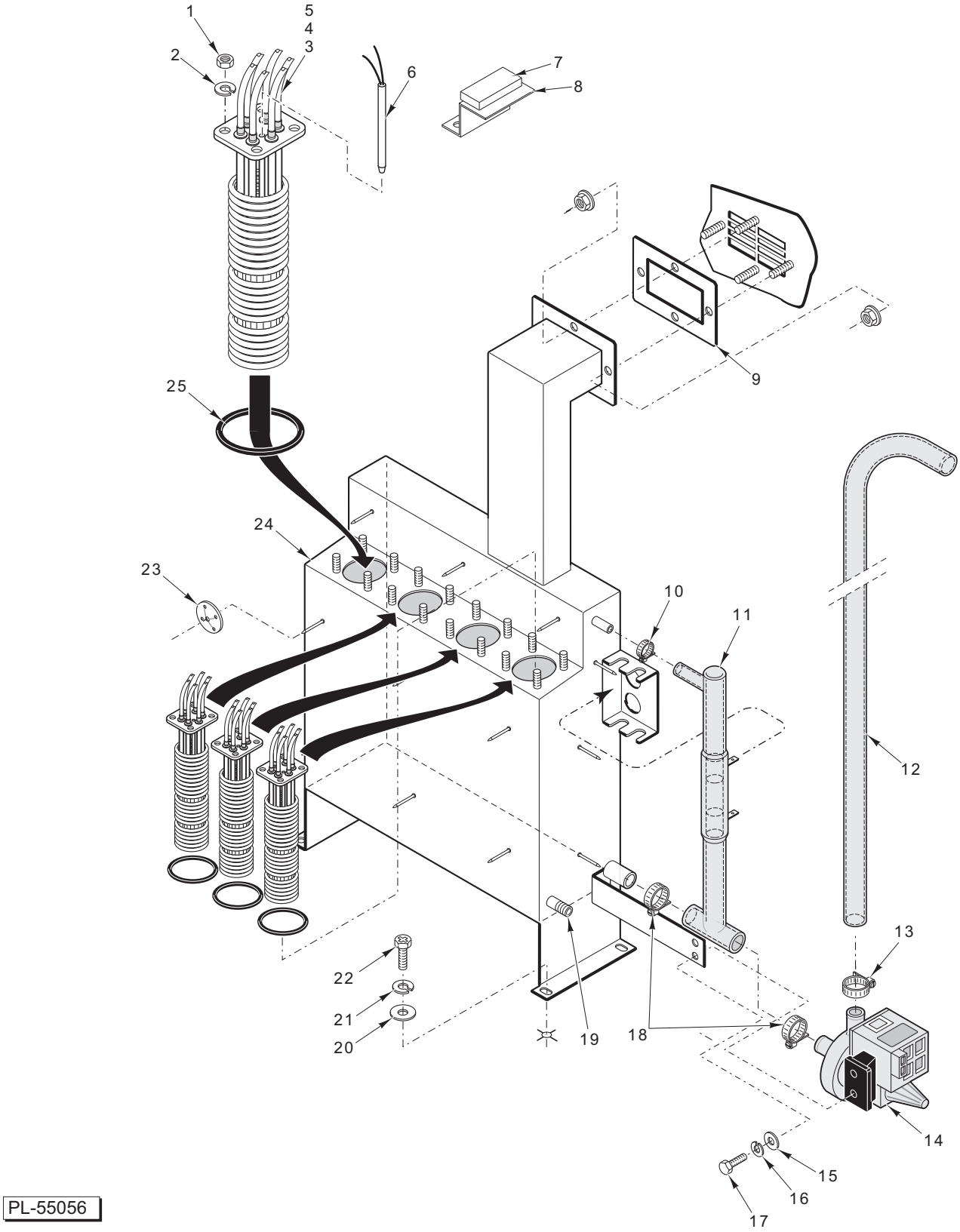

BOILER ASSEMBLY (20 FULL RACKS)

BOILER ASSEMBLY (20 FULL RACKS)

ILLUS. PL-55056	PART NO.	NAME OF PART	AMT.
1	00-602492	Nut	16
2	00-602305	Lockwasher	16
3	00-845370-00009	Element – Heating (208 V.)	4
4	00-845370-00011	Element – Heating (240 V.)	4
5	00-845370-00013	Element – Heating (480 V.)	4
6	00-845525-00001	Thermal Fuse	4
7	00-845532	Terminal Block	4
8	00-845529	Terminal Bracket	4
9	00-492087	Gasket	1
10	00-844983-00002	Clamp – Hose	1
11	00-845004	Probe – Water Level	1
12	00-845185-00005	Hose	1
13	00-149978-00001	Clamp – Hose	1
14	00-845455-00001	Pump – Valve	1
15	WS-004-18	Washer	2
16	WL-019-70	Lockwasher M8 Helical	2
17	SC-120-54	Cap Screw M8 x 1.25 x 10 mm Soc. Hex Hd.	2
18	00-149978-00001	Clamp – Hose	2
19	00-845378	Connector – Water Inlet	1
20	WS-004-18	Washer	2
21	WL-019-70	Lockwasher M8 Helical	2
22	SC-120-54	Cap Screw M8 x 1.25 x 10 mm Soc. Hex Hd.	2
23	00-233924-00001	Clip	AR
24	00-844974-00002	Steam Generator (20F)	1
25	00-233982-00001	Gasket	4

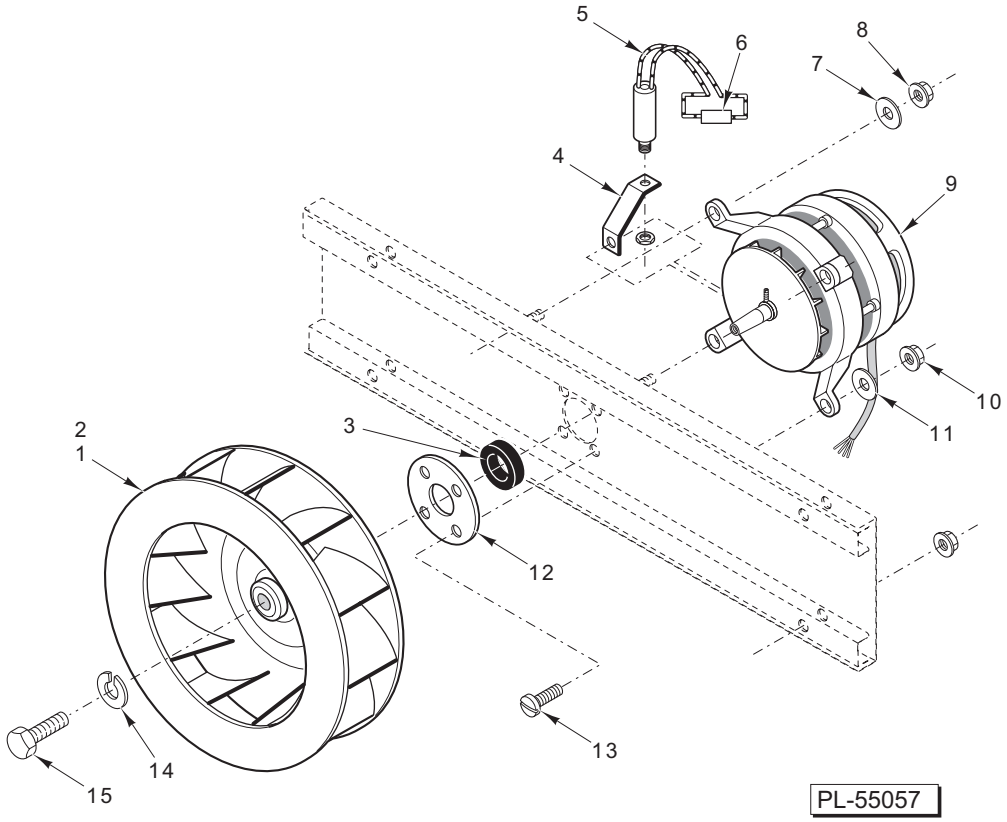

CONVECTION UNIT

CONVECTION UNIT

ILLUS. PL-55057	PART NO.	NAME OF PART	AMT.
1	00-233978-00001	Air Rotor – Convection (6 Levels)	1
2	00-233978-00002	Air Rotor – Convection (10 and 20 Levels)	1
3	00-322190-00001	Seal – Convection	1
4	00-844984	Bracket – Capacitor	1
5	00-845388	Capacitor (8 UF)	1
6	00-480250	Resistor (470K)	1
7	00-149940-00024	Washer	1
8	NS-048-83	Jam Nut M10 x 1.5	1
9	00-844955-00001	Motor	1
10	NS-048-83	Jam Nut M10 x 1.5	3
11	00-149940-00024	Washer	3
12	00-492108	Cover – Convection Fan Seal	1
13	SC-120-54	Cap Screw M8 x 1.25 x 10 mm Soc. Hex Hd.	4
14	00-602295	Lockwasher	1
15	00-602586	Screw	1

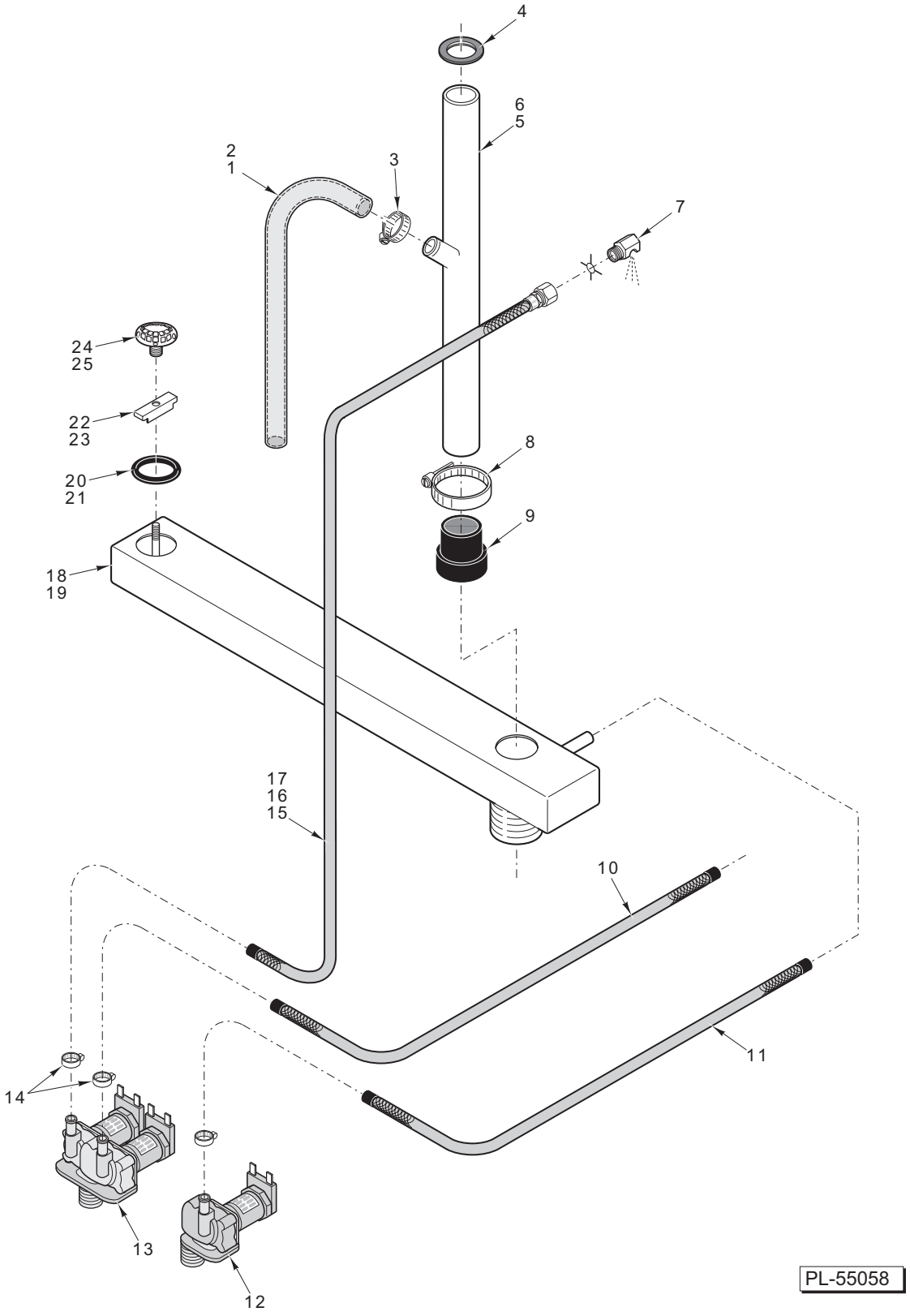

PIPEWORK AND DRAIN (6 & 10 RACKS)

PIPEWORK AND DRAIN (6 & 10 RACKS)

ILLUS. PL-55058	PART NO.	NAME OF PART	AMT.
1	00-845185-00004	Drain Tube (6 Level)	1
2	00-845185-00006	Drain Tube (10 Level)	1
3	00-149978-00001	Clamp	1
4	00-492110	Grommet	1
5	00-845456-00001	Drain Vent (6 Level)	1
6	00-845456-00002	Drain Vent (10 Level)	1
7	00-148271	Humidifier Nozzle	1
8	00-521690	Clamp – Hose	1
9	00-845457-00001	Coupling	1
10	00-845399-00001	Hose	1
11	00-492117-00004	Hose	1
12	00-845447-00001	Solenoid Valve	1
13	00-845447-00002	Solenoid Valve	1
14	00-149978-00001	Clamp	AR
15	00-845187-00001	Hose (6 Half)	1
16	00-845187-00004	Hose (10 Half)	1
17	00-845187-00003	Hose (10 Full)	1
18	00-845454-00001	Drain Tube Assy. (Half)	1
19	00-845454-00002	Drain Tube Assy. (Full)	1
20	00-233982-00006	O-Ring (Half)	1
21	00-233982-00007	O-Ring (Full)	1
22	00-493544	Bracket – Interior Drain Strain (Half)	1
23	00-493545	Bracket – Interior Drain Strain (Full)	1
24	00-493542	Drain Strainer (Half)	1
25	00-493543	Drain Strainer (Full)	1
	00-853028	Hose Bib 3/4 Water Connection	1
	00-853030	Hose 3/4	1

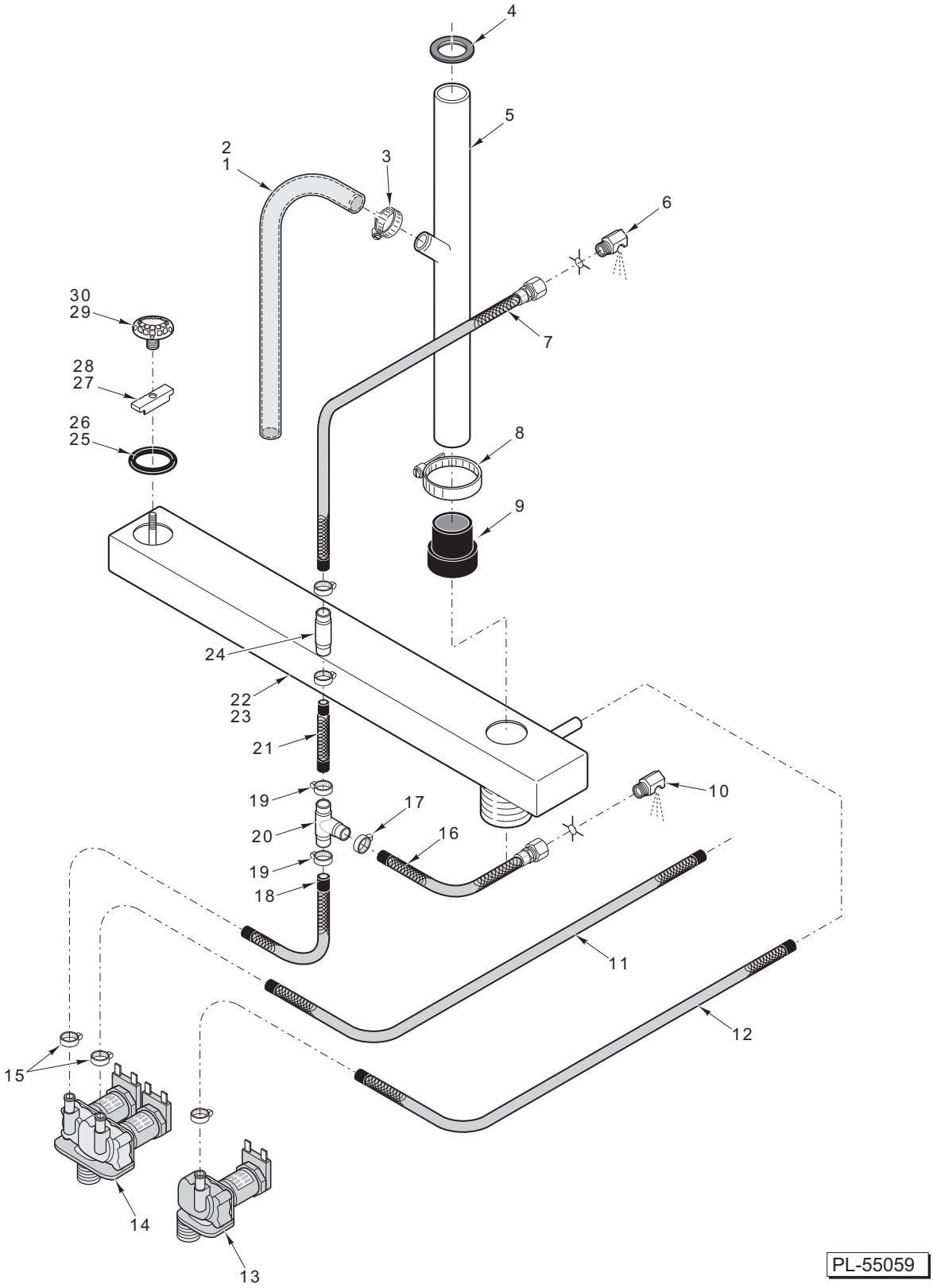

PIPEWORK AND DRAIN (20 RACKS)

PIPEWORK AND DRAIN (20 RACKS)

ILLUS. PL-55059	PART NO.	NAME OF PART	AMT.
1	00-844672-00003	Hose (Half)	1
2	00-845185-00005	Hose (Full)	1
3	00-149978-00001	Clamp – Hose	1
4	00-492110	Grommet	1
5	00-845456-00003	Tube	1
6	00-148271	Humidifier Nozzle	1
7	00-322137-00005	Hose	1
8	00-521690	Clamp – Hose	1
9	00-845457-00001	Coupling	1
10	00-148271	Humidifier Nozzle	1
11	00-492117-00001	Hose	1
12	00-492117-00004	Hose	1
13	00-845447-00001	Solenoid Valve	1
14	00-845447-00002	Solenoid Valve	1
15	00-149978-00001	Clamp – Hose	AR
16	00-322137-00004	Hose	1
17	00-149978-00001	Clamp – Hose	1
18	00-492117-00004	Hose – Cold Water Condenser	1
19	00-149978-00001	Clamp – Hose	2
20	00-492116	Tee	1
21	00-492117-00003	Hose	1
22	00-845454-00001	Drain Tube Assy. (Half)	1
23	00-845454-00002	Drain Tube Assy. (Full)	1
24	00-491751	Valve – Check	1
25	00-233982-00006	O-Ring (Half)	1
26	00-233982-00007	O-Ring (Full)	1
27	00-493544	Bracket (Half)	1
28	00-493545	Bracket (Full)	1
29	00-493542	Drain Strainer (Half)	1
30	00-493543	Drain Strainer (Full)	1
	00-853028	Hose Bib 3/4 Water Connection	1
	00-853030	Hose 3/4	1

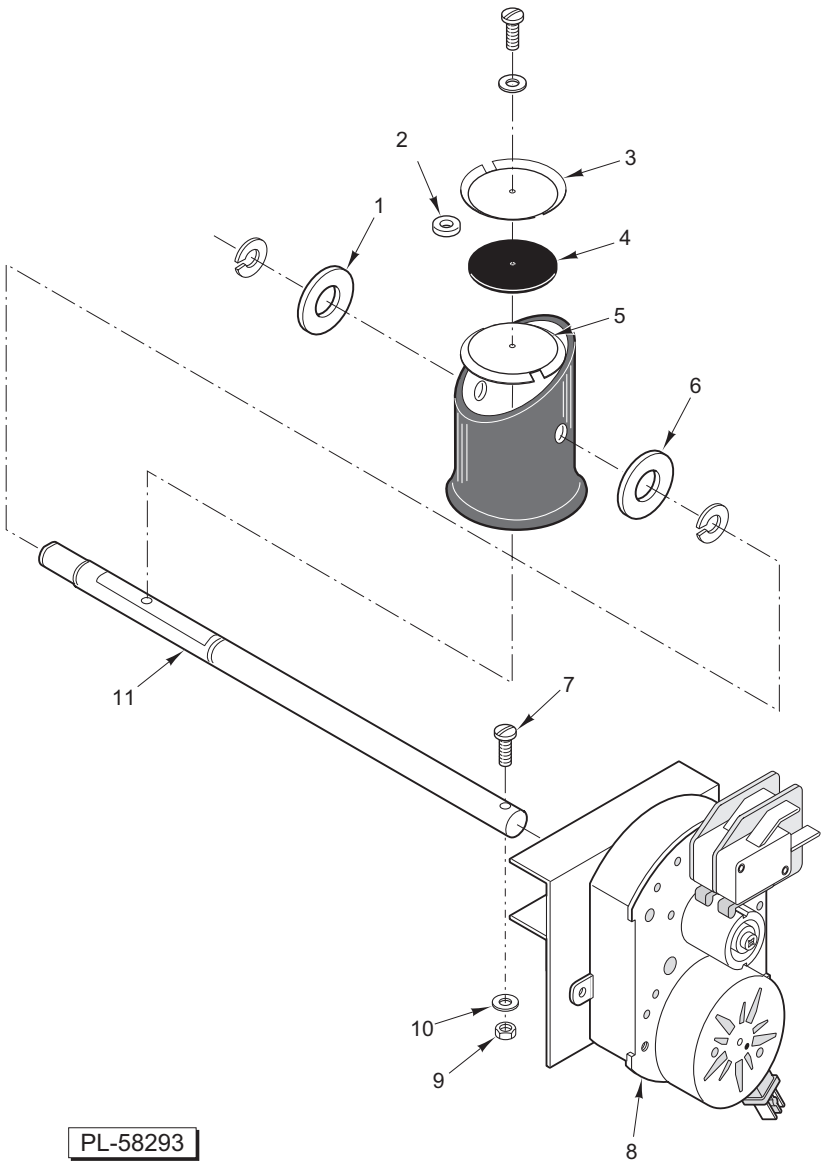

CAVITY VENT

CAVITY VENT

ILLUS. PL-58293	PART NO.	NAME OF PART	AMT.
1	00-494120	Washer	1
2	00-492958	Washer	1
3	00-845218	Shutter – Top	1
4	00-844617	Disc	1
5	00-845218	Shutter – Bottom	1
6	00-494120	Washer	1
7	SC-200-17	Cap Screw M4 x 0.7 x 12 mm Soc. Hex Hd.	1
8	00-845371	Cavity Vent Motor	1
9	NS-048-82	Jam Nut M4 x 0.7 Hex (SST)	1
10	WS-004-18	Washer	1
11	00-844616	Shaft (300 mm Lg.)	1

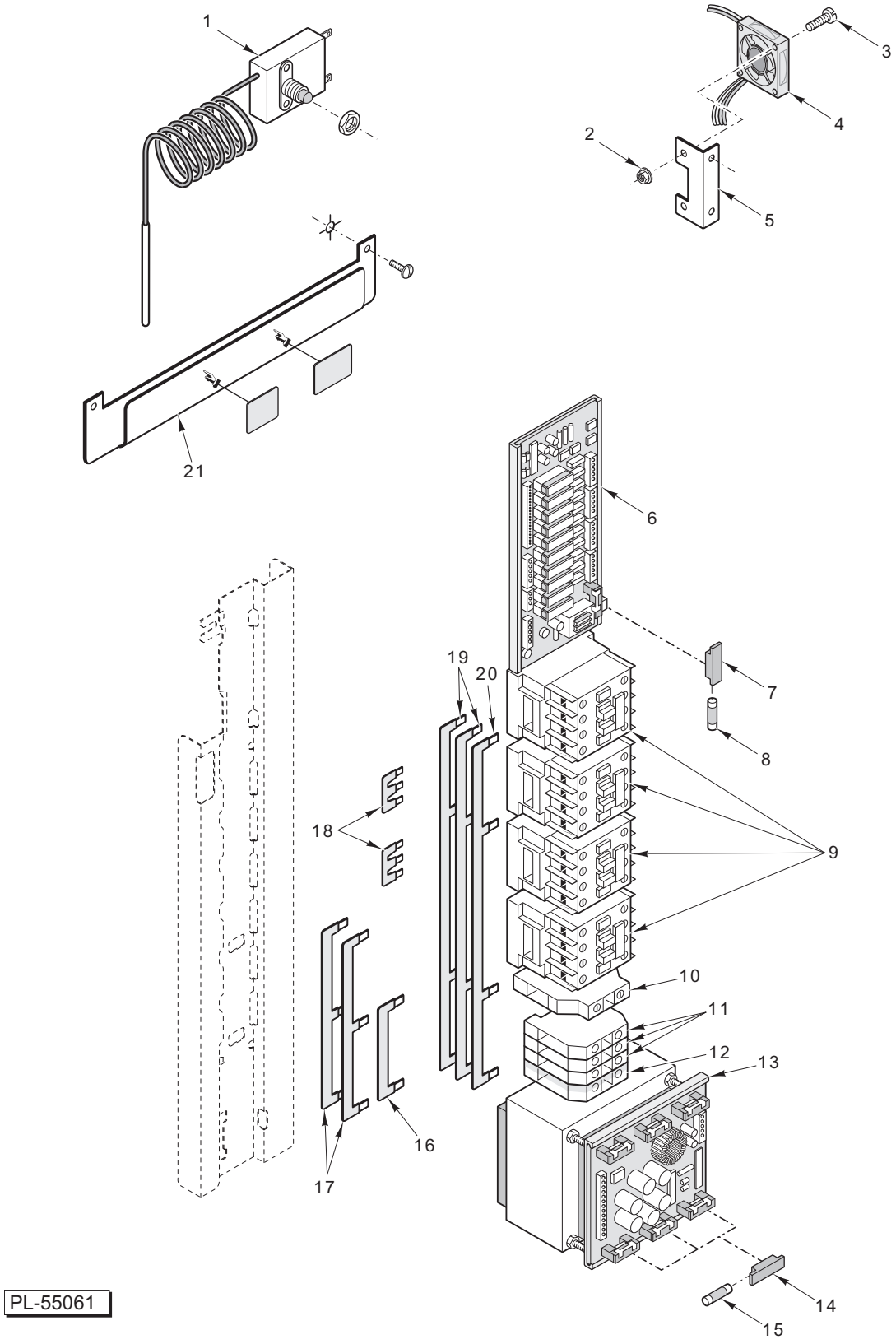

ELECTRICAL CONNECTION ASSEMBLY (6 LEVELS)

ELECTRICAL CONNECTION ASSEMBLY (6 LEVELS)

ILLUS. PL-55061	PART NO.	NAME OF PART	AMT.
1	00-154344	Thermostat	2
2	NS-048-82	Jam Nut M4 x 0.7 Hex (SST)	2
3	SC-200-17	Cap Screw M4 x 0.7 x 12 mm Soc. Hex Hd.	2
4	00-492994	Fan – Compartment Cooling	1
5	00-844980	Bracket	1
6	00-844943-00001	Relay Board	1
7	00-845188-00004	Fuse Holder	AR
8	00-845188-00002	Fuse (5 Amp.)	AR
9	00-855786-00001	Contactor	4
10	00-844995	Switch – Auxilliary	1
11	00-845049-00001	Terminal Block	3
12	00-845049-00002	Terminal Block (Ground Only)	1
13	00-844944-00003	Transformer Board	1
14	00-845188-00004	Fuse Holder	AR
15	00-845188-00002	Fuse (5 Amp.)	AR
16	00-844996-00005	Power Bar (480 V. Only)	1
17	00-844996-00006	Power Bar (480 V. Only)	2
18	00-845446	Jumper Bar (480 V. Only)	2
19	00-844996-00008	Power Bar (208/240 V.)	2
20	00-844996-00007	Power Bar (208/240 V.)	1
21	00-844978-00003	Ribbon Cable Bracket	1

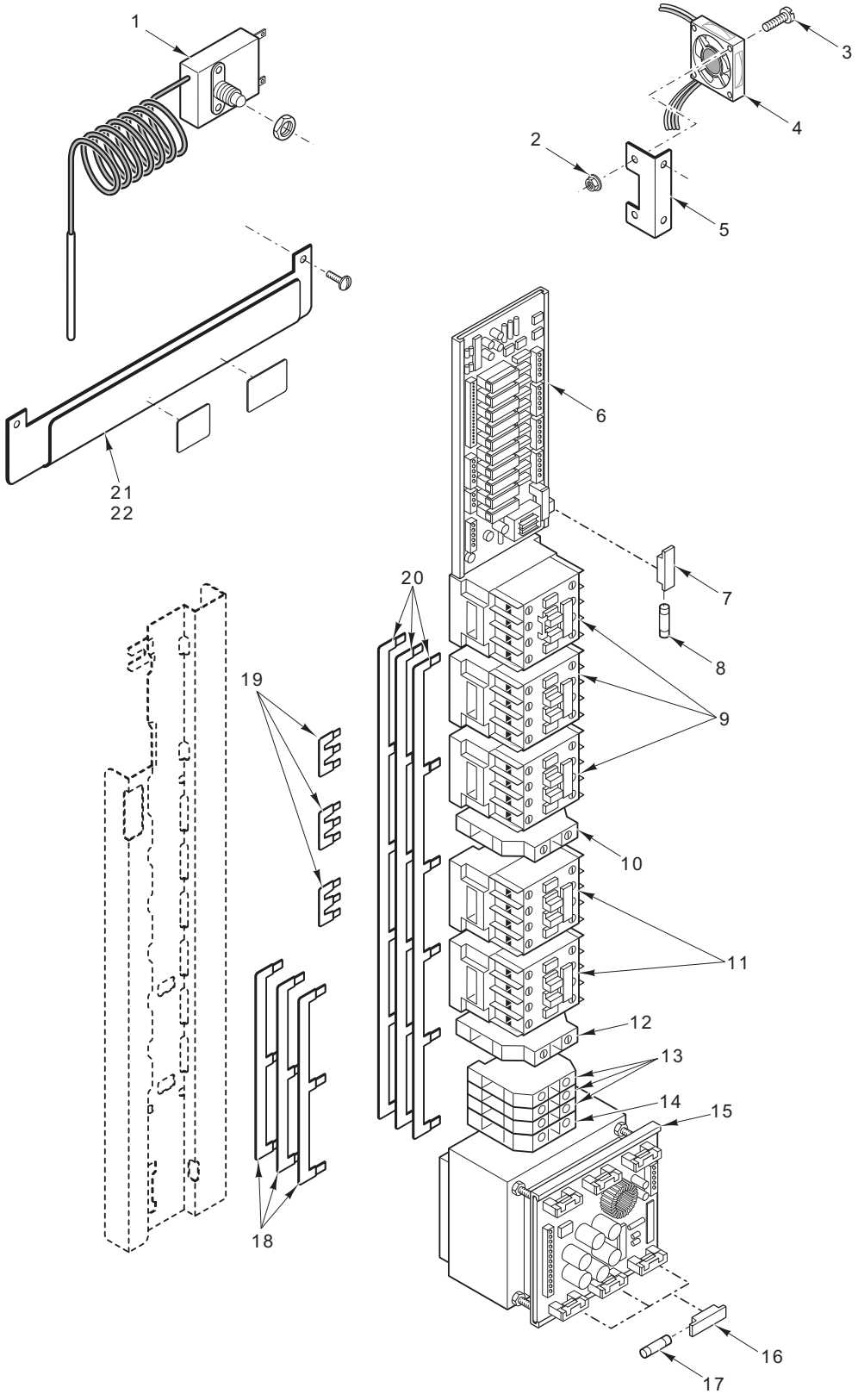

ELECTRICAL CONNECTION ASSEMBLY (10 LEVELS)

ELECTRICAL CONNECTION ASSEMBLY (10 LEVELS)

ILLUS. PL-58184	PART NO.	NAME OF PART	AMT.
1	00-154344	Thermostat	2
2	NS-048-82	Jam Nut M4 x 0.7 Hex (SST)	2
3	SC-200-17	Cap Screw M4 x 0.7 x 12 mm Soc. Hex Hd.	2
4	00-492994	Fan – Compartment Cooling	1
5	00-844980	Bracket	1
6	00-844943-00001	Relay Board	1
7	00-845188-00004	Fuse Holder	AR
8	00-845188-00002	Fuse (5 Amp.)	AR
9	00-855786-00001	Contactor	3
10	00-844995	Auxiliary Switch	1
11	00-855786-00001	Contactor	2
12	00-844995	Auxiliary Switch	1
13	00-150443-00049	Terminal Block	3
14	00-150443-00050	Terminal Block (Ground Only)	1
15	00-844944-00003	Transformer Board	1
16	00-845188-00004	Fuse Holder	AR
17	00-845188-00002	Fuse (5 Amp.)	AR
18	00-844996-00003	Power Bar (480 V. Only)	3
19	00-845446	Jumper Bar (480 V. Only)	3
20	00-844996-00004	Power Bar (208/240 V.)	3
21	00-844978-00001	Bracket (Half)	1
22	00-844978-00002	Bracket (Full)	1

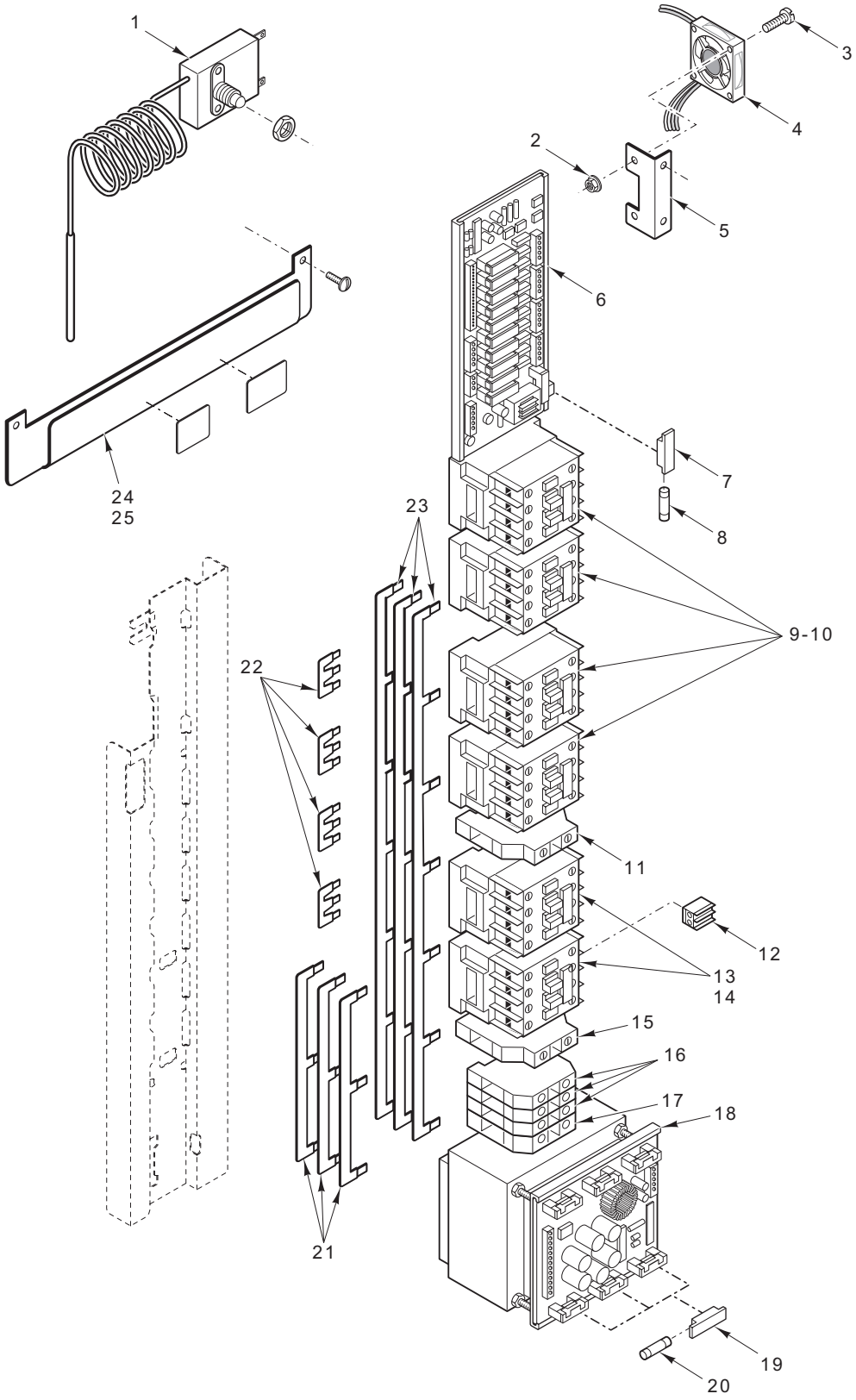

ELECTRICAL CONNECTION ASSEMBLY (20 LEVELS)

ELECTRICAL CONNECTION ASSEMBLY (20 LEVELS)

ILLUS. PL-58185	PART NO.	NAME OF PART	AMT.
1	00-154344	Thermostat	2
2	NS-048-82	Jam Nut M4 x 0.7 Hex (SST)	2
3	SC-200-17	Cap Screw M4 x 0.7 x 12 mm Soc. Hex Hd.	2
4	00-492994	Fan – Compartment Cooling	1
5	00-844980	Bracket	1
6	00-844943-00001	Relay Board	1
7	00-845188-00004	Fuse Holder	AR
8	00-845188-00002	Fuse (5 Amp.)	AR
9	00-855786-00002	Contactor	3
10	00-855776-00002	Contactor	1
11	00-845434-00001	Auxiliary Switch	1
12	00-845492-00001	Auxiliary Switch	1
13	00-855786-00002	Contactor	2
14	00-855776-00002	Contactor	1
15	00-844995	Auxiliary Switch	1
16	00-229612-00002	Terminal Block	3
17	00-229613-00002	Terminal Block (Ground Only)	1
18	00-844944-00003	Transformer Board	1
19	00-845188-00004	Fuse Holder	AR
20	00-845188-00002	Fuse (5 Amp.)	AR
21	00-844996-00010	Power Bar (480 V. Only)	3
22	00-844996-00001	Jumper Bar (480 V. Only)	4
23	00-844996-00009	Power Bar (208/240 V.)	3
24	00-844978-00001	Bracket (Half)	1
25	00-844978-00002	Bracket (Full)	1
	00-855408-00001	Transformer – 1KVA	1
	00-855409-00001	Bracket – Transformer	1
	SC-008-41	Mach. Screw 10-32 x 1/2 Slotted Rd. Hd.	4
	WS-028-21	Washer (SST)	4
	NS-048-37	Lock Nut – Special 10-32	4

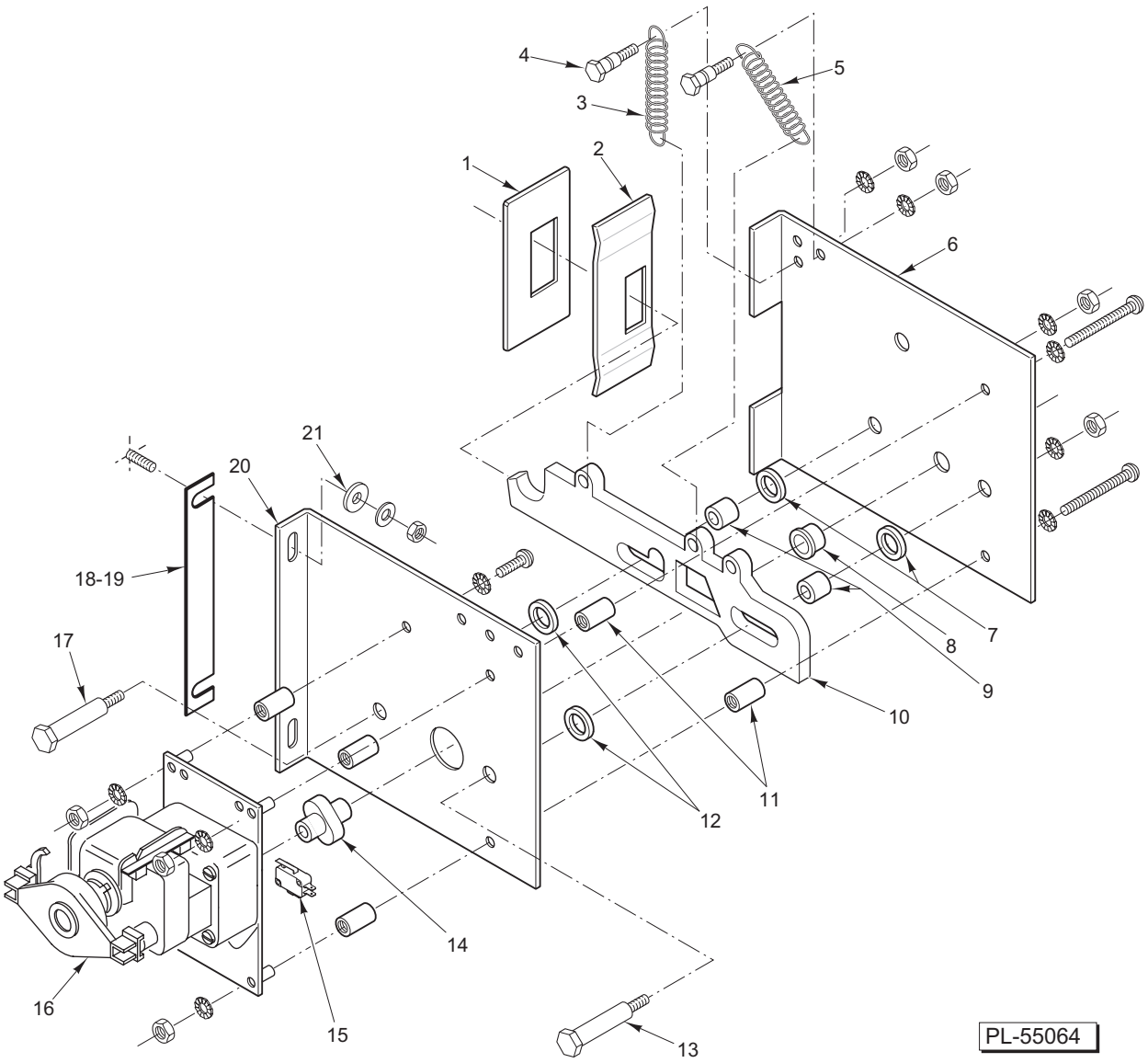

DOOR INTERLOCK

DOOR INTERLOCK

ILLUS. PL-55064	PART NO.	NAME OF PART	AMT.
1	00-492916	Plate	1
2	00-492968	Plate	1
3	00-491985	Spring – Tension	2
4	00-492419	Screw	2
5	00-491985	Spring – Tension	1
6	00-844918	Plate – Rear Door Latch Assy.	1
7	00-492423	Washer	4
8	00-492114	Bushing	1
9	00-492424	Spacer	2
10	00-492420	Hook	1
11	00-492425	Spacer	2
12	00-492423	Washer	2
13	00-492422	Screw	2
14	00-492427	Cam (6 mm Hole)	1
15	00-480016	Switch – Miniature	2
16	00-480028-00002	Door Motor	1
17	00-492422	Screw	2
18	00-845402-00002	Spacer Plate (1 mm)	1
19	00-845402-00001	Spacer Plate (0.4 mm)	2
20	00-492366	Plate	1
21	00-149940-00024	Washer	2
	00-844960-00011	Complete Door Assy. (Incls. Items 1 thru 21)	2

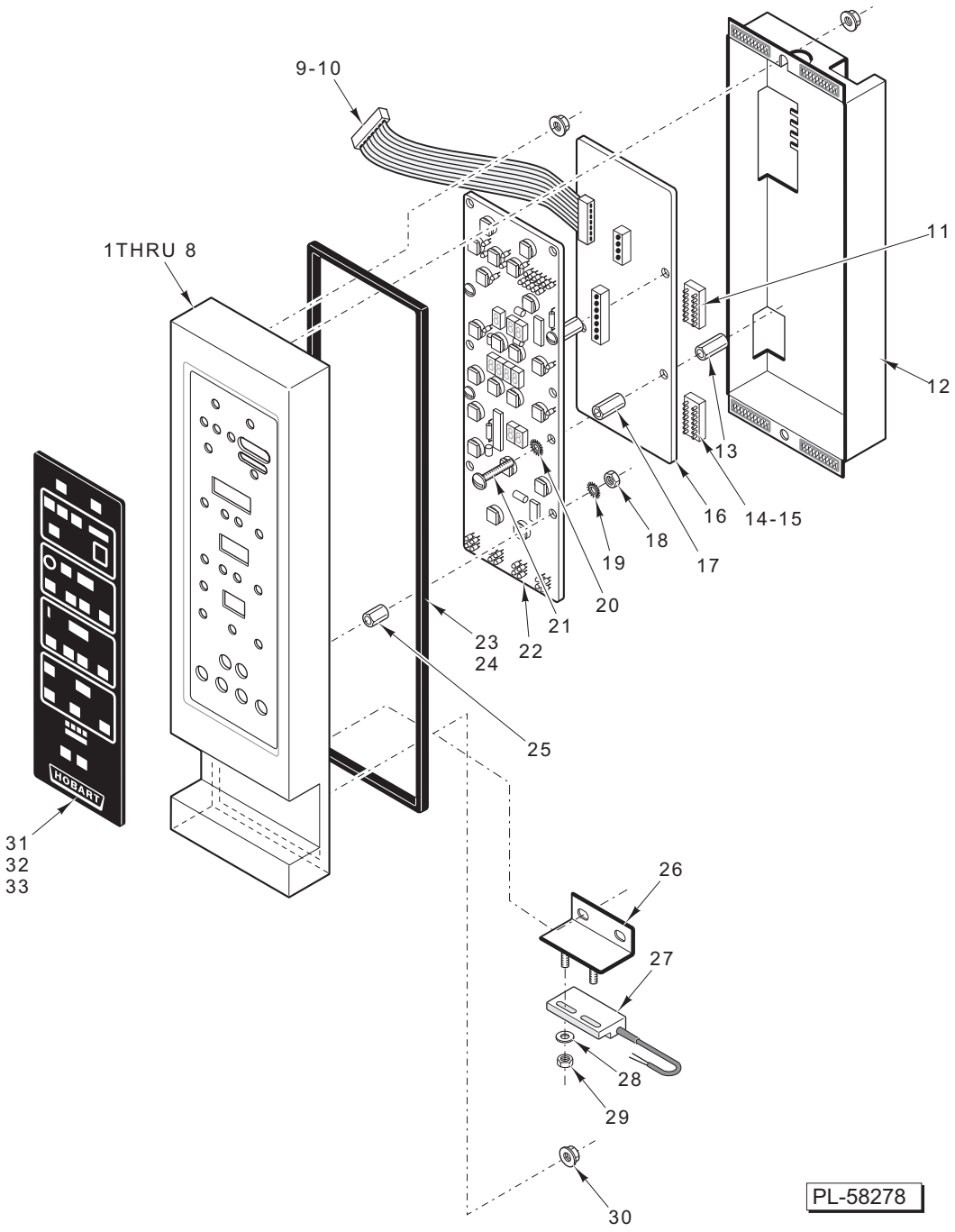

ELECTRONIC CONTROL UNIT (6 & 10 LEVELS)

ELECTRONIC CONTROL UNIT (6 & 10 LEVELS)

ILLUS. PL-58278	PART NO.	NAME OF PART	AMT.
1	00-845050-00001	Control – Panel (Programmable) (6 Half)	1
2	00-480309-00001	Control – Panel (Manual) (6 Half)	1
3	00-480310-00001	Control – Panel (Manual) (6 Half)	1
4	00-845440-00001	Control – Panel (Programmable Ele) (6 Half)	1
5	00-845050-00002	Control – Panel (Programmable) (10 Levels)	1
6	00-845440-00002	Control – Panel (Progarmmable Ele) (10 Full & Half)	1
7	00-480309-00002	Control – Panel (Manual Ele) (10 Full & Half)	1
8	00-480310-00002	Control – Panel (Manual) (10 Levels)	1
9	00-845190-00003	Ribbon Cable (6 & 10 Half)	1
10	00-845190-00002	Ribbon Cable (10 Full)	1
11	00-845419	Battery Backup (Programmable)	1
12	00-844982	Cover (Programmable)	1
13	00-844993-00003	Stand-off	4
14	00-844950-00047	EPROM (Ver. 669, Programmable)	1
15	00-844950-00049	EPROM (Ver. A69, Manual Control)	1
16	00-480961-00002	CPU Board (Principal Control)	1
17	00-844993-00002	Stand-off	4
18	NS-048-82	Jam Nut M4 x 0.7 Hex (SST)	4
19	WL-019-70	Lockwasher M8 Helical	4
20	WL-019-70	Lockwasher M8 Helical	4
21	SC-200-17	Cap Screw M4 x 0.7 x 12 mm Soc. Hex Hd.	4
22	00-844945-00002	Keypad – Control Board (Programmable)	1
23	00-492444	Gasket – Front Panel (6 Levels)	1
24	00-492472	Gasket – Front Panel (10 Levels)	1
25	00-844993-00001	Stand-off	4
26	00-845051	Bracket	1
27	00-844951-00001	Switch – Reed Interlock	1
28	WL-019-70	Lockwasher M8 Helical	2
29	NS-048-82	Jam Nut M4 x 0.7 Hex (SST)	2
30	NS-048-82	Jam Nut M4 x 0.7 Hex (SST)	2
31	00-853129-00001	Overlay (Programmable)	1
32	00-853042	Overlay (Manual)	1
33	00-855219-00001	Overlay (Ele Combi)	1
	00-845433-00001	Display – Board (Manual Control)	1

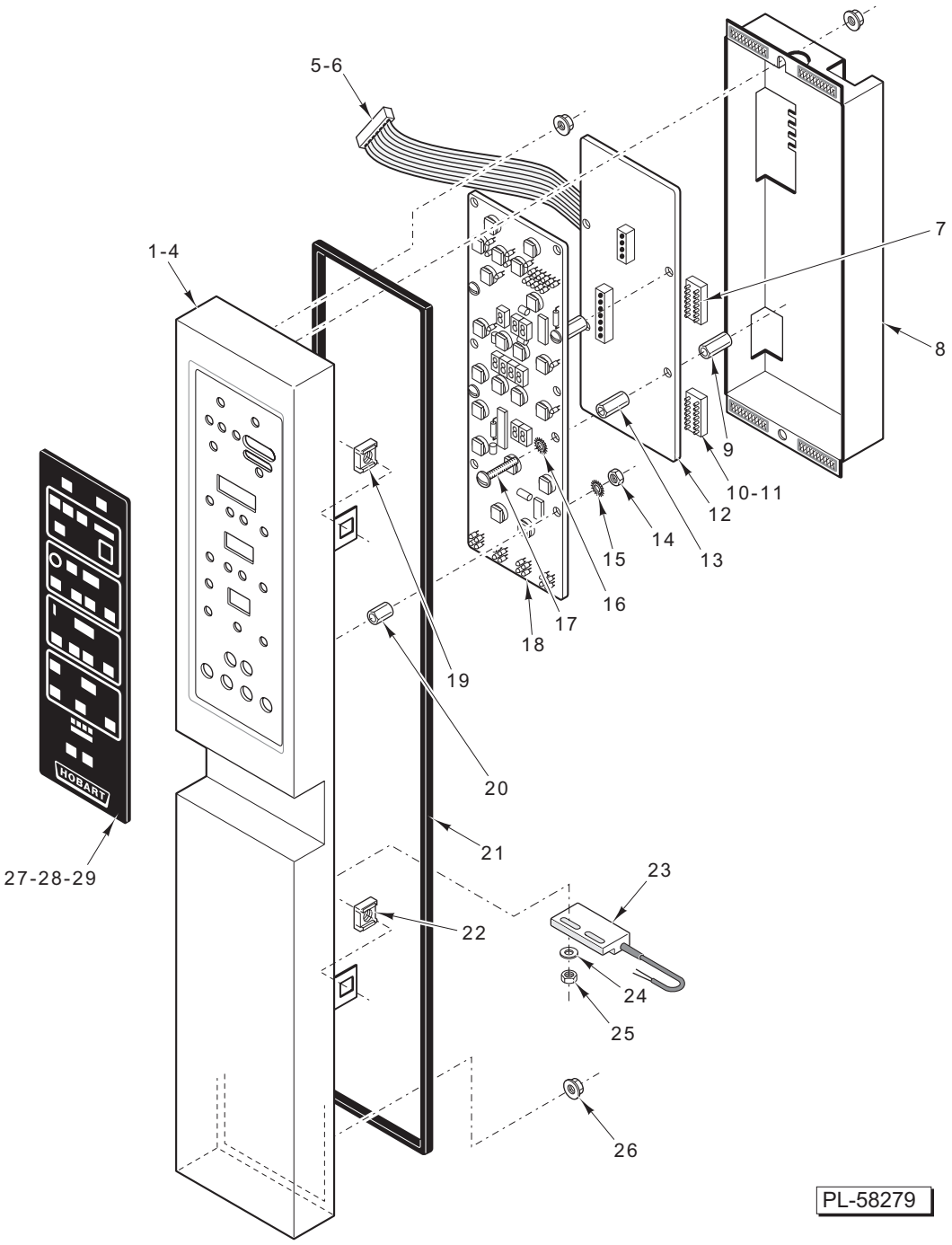

ELECTRONIC CONTROL UNIT (20 LEVELS)

ELECTRONIC CONTROL UNIT (20 LEVELS)

ILLUS. PL- 58279	PART NO.	NAME OF PART	AMT.
1	00-844981	Control – Panel (Programmable)	1
2	00-845440-00003	Control – Panel (Progarmmable Ele)	1
3	00-480310-00003	Control – Panel (Manual)	1
4	00-480309-00003	Control – Panel (Manual Ele)	1
5	00-845190-00004	Ribbon Cable (Half)	1
6	00-845190-00002	Ribbon Cable (Full)	1
7	00-845419	Battery Backup (Programmable)	1
8	00-844982	Cover	1
9	00-844993-00003	Stand-off	4
10	00-844950-00048	EPROM (Ver. 769, Programmable)	1
11	00-844950-00050	EPROM (Ver. B69, Manual Control)	1
12	00-480961-00001	Board – (Principle Control)	1
13	00-844993-00002	Stand-off	4
14	NS-048-82	Jam Nut M4 x 0.7 Hex (SST)	4
15	WL-019-70	Lockwasher M8 Helical	4
16	WL-019-70	Lockwasher M8 Helical	4
17	SC-200-17	Cap Screw M4 x 0.7 x 12 mm Soc. Hex Hd.	4
18	00-844945-00002	Keypad – Control Board (Programmable)	1
19	00-149926-00005	Bracket	1
20	00-844993-00001	Stand-off	4
21	00-492198	Gasket – Front Panel	1
22	00-149926-00005	Bracket	1
23	00-844951-00001	Switch – Reed Interlock	1
24	WL-019-70	Lockwasher M8 Helical	2
25	NS-048-82	Jam Nut M4 x 0.7 Hex (SST)	2
26	NS-048-82	Jam Nut M4 x 0.7 Hex (SST)	2
27	00-853129-00001	Overlay (Programmable)	1
28	00-853042	Overlay (Manual)	1
29	00-855219-00001	Overlay (Ele Combi)	1
	00-845433-00001	Display – Board (Manual Control)	1

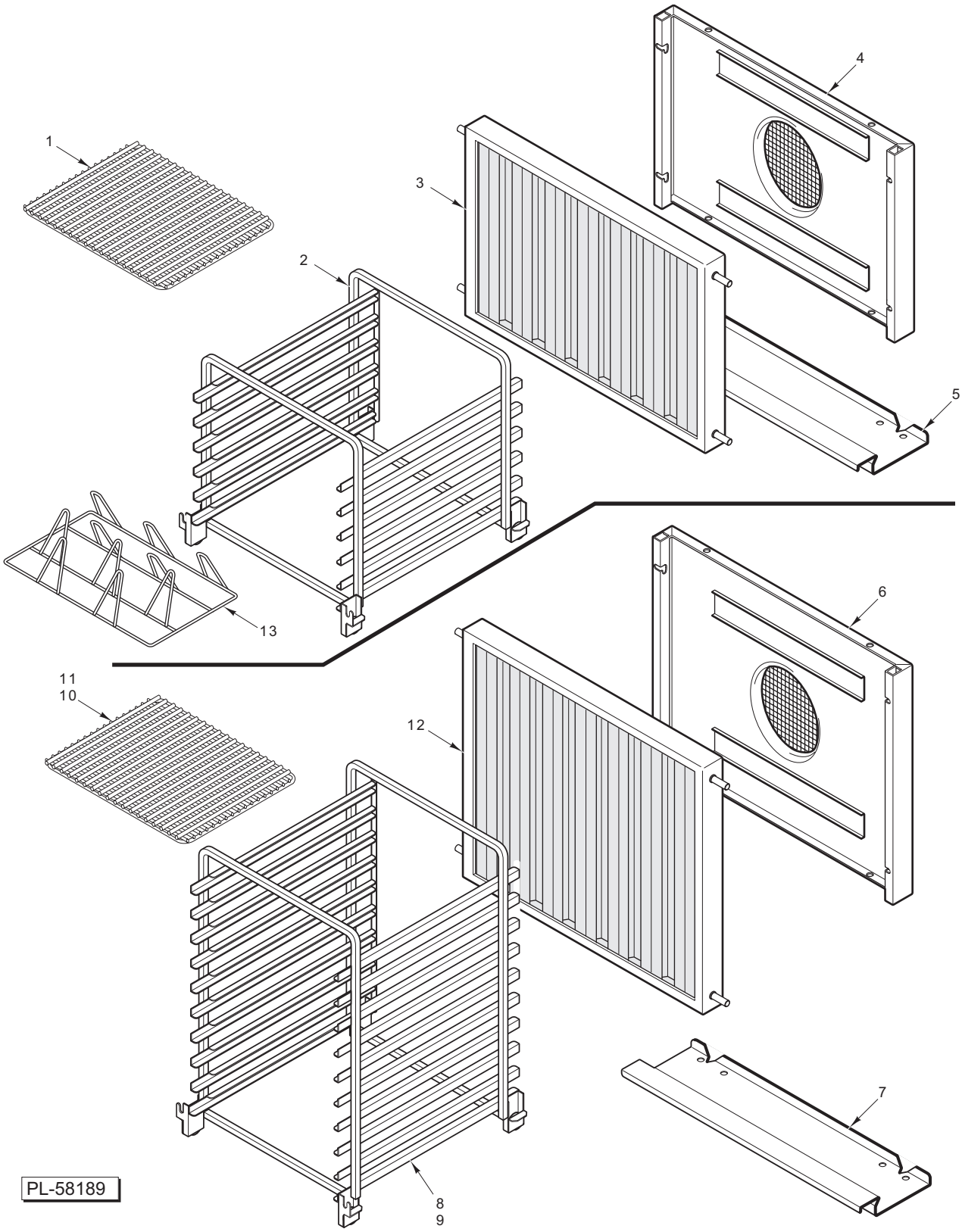

FILTER AND CARRIAGE (6 & 10 LEVELS)

FILTER AND CARRIAGE (6 & 10 LEVELS)

ILLUS. PL-58189	PART NO.	NAME OF PART	AMT.
1	00-850502	Wire Rack (6 Half & 10 Half)	AR
2	00-844722	Rack – Insert (6 Half)	1
3	00-233836-00001	Filter – Flat (6 Half)	1
4	00-492397	Panel – Fan Guard (6 Half)	1
5	00-492784	Retainer Rack	1
6	00-492075	Fan Guard (10 Levels)	1
7	00-492784	Retainer Rack	1
8	00-844723	Rack – Insert (10 Half Racks)	1
9	00-844725	Rack – Insert (10 Full Racks)	1
10	00-850502	Wire Rack (6 Half & 10 Half)	AR
11	00-850503	Wire Rack (10 Full)	AR
12	00-233836-00002	Filter – Flat (10 Levels)	1
13	00-850575-00002	Rack – Chicken (6 Half & 10 Half)	1

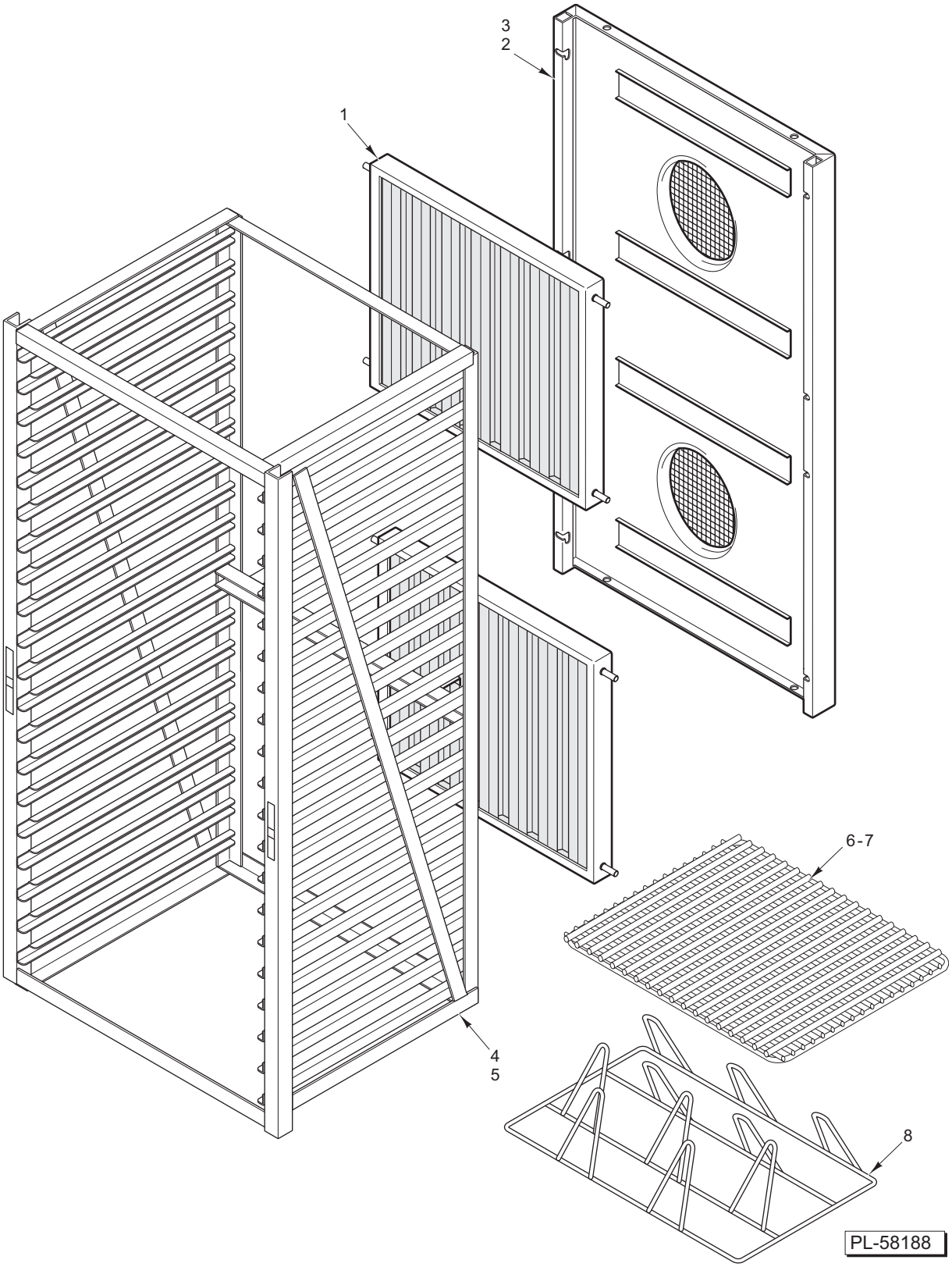

FILTER AND CARRIAGE (20 RACKS)

FILTER AND CARRIAGE (20 RACKS)

ILLUS. PL-58188	PART NO.	NAME OF PART	AMT.
1	00-233836-00002	Filter – Flat	2
2	00-844977	Fan Guard (20 Half)	1
3	00-844977-00003	Fan Guard (20 Full)	1
4	00-844724	Rack – Insert (20 Half)	1
5	00-844726	Rack – Insert (20 Full)	1
6	00-850502	Wire Rack (20 Half)	AR
7	00-850503	Wire Rack (20 Full)	AR
8	00-850575-00002	Rack – Chicken	1

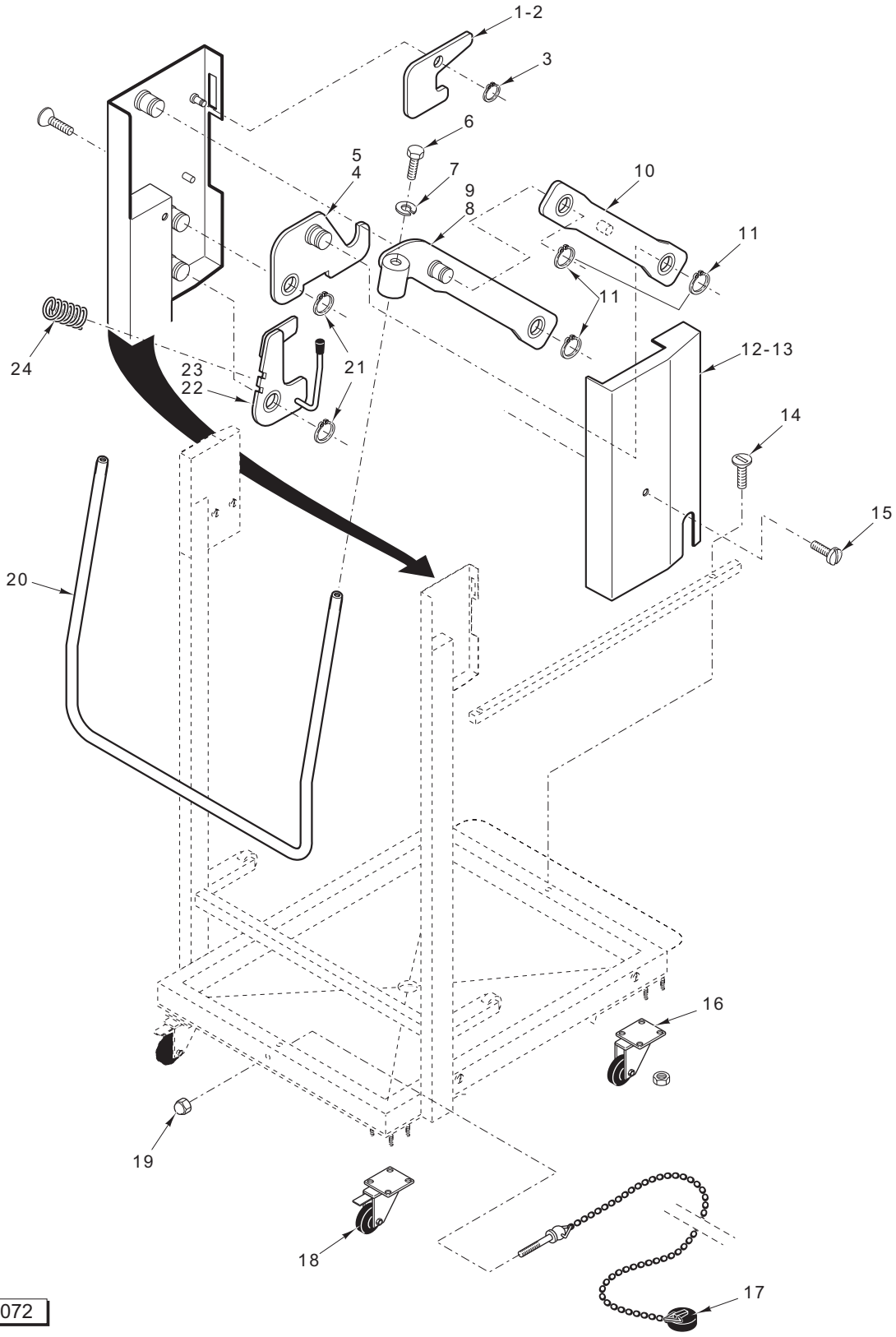

TROLLEY ASSEMBLY (20 RACKS)

TROLLEY ASSEMBLY (20 RACKS)

ILLUS. PL-55072	PART NO.	NAME OF PART	AMT.
1	00-492754	Catch – Interlock (Left)	1
2	00-492755	Catch – Interlock (Right)	1
3	RR-010-18	Retaining Ring	2
4	00-492756	Linkage – Hook (Left)	1
5	00-492757	Linkage – Hook (Right)	1
6	00-602586	Screw	1
7	00-602295	Lockwasher	1
8	00-492758	Brace (Left)	1
9	00-492759	Brace (Right)	1
10	00-492762	Brace	1
11	RR-010-18	Retaining Ring	3
12	00-492763	Cover (Left)	1
13	00-492764	Cover (Right)	1
14	SC-118-67	Cap Screw M6 x 1 x 10 mm Soc. Hex Hd.	2
15	SC-118-67	Cap Screw M6 x 1 x 10 mm Soc. Hex Hd.	2
16	00-492770	Caster	4
17	00-844834	Plug & Chain	1
18	00-492769	Caster W/Brake	4
19	NS-047-34	Acorn Nut M6 x 1	1
20	00-492767	Handle	1
21	RR-010-18	Retaining Ring	2
22	00-492760	Linkage – Handle (Left)	1
23	00-492761	Linkage – Handle (Right)	1
24	00-322083	Spring	2
	00-850240-00002	Trolley (Half)	1
	00-850243-00002	Trolley (Full)	1

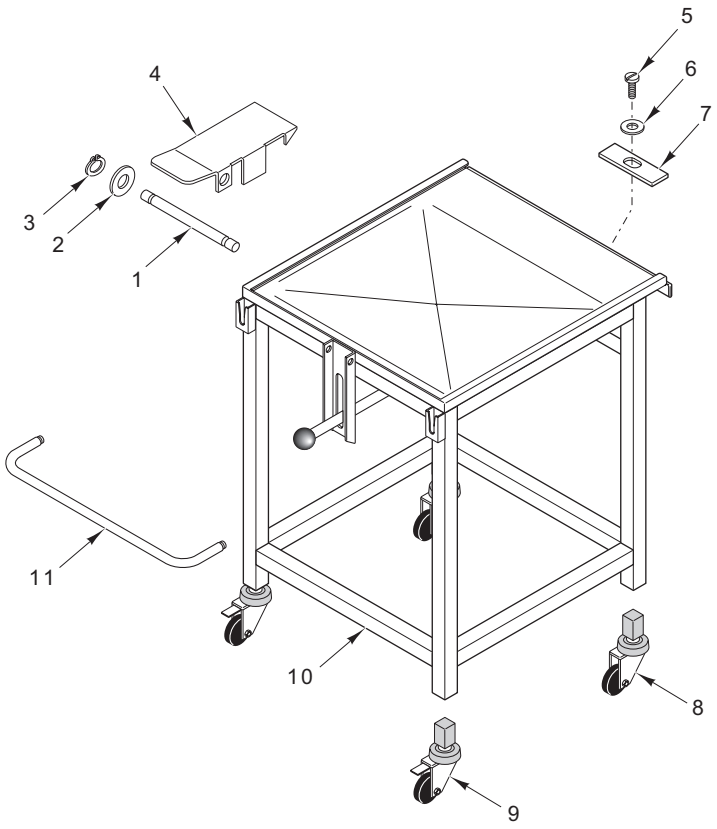

PL-55071

TABLE ASSEMBLY (6 RACKS & 10 HALF RACKS)

ILLUS. PL-55071	PART NO.	NAME OF PART	AMT.
1	00-322279	Rod	1
2	00-602283	Washer	2
3	RR-010-18	Retaining Ring	2
4	00-322277	Cover	1
5	00-603991	Screw	1
6	00-602283	Washer	1
7	00-322290	Plate	1
8	00-322228-00003	Caster Assy.	2
9	00-322228-00004	Caster Assy.	2
10	00-322385	Frame	1
11	00-322388	Handle	1
	00-850021-00002	Table – Landing	1