HOBART

CATALOG OF REPLACEMENT PARTS

GAS CONVECTION OVEN WITH TIMER CONTROLLED HUMIDIFICATION

CVX21G ML-46170

THIS MANUAL REPLACES AND SHOULD BE USED INSTEAD OF FORM 16294.

PRIOR ML'S COVERED IN THIS MANUAL

ML-46143

A product of HOBART CORPORATION TROY, OHIO 45374

FORM 16747 (2-88)

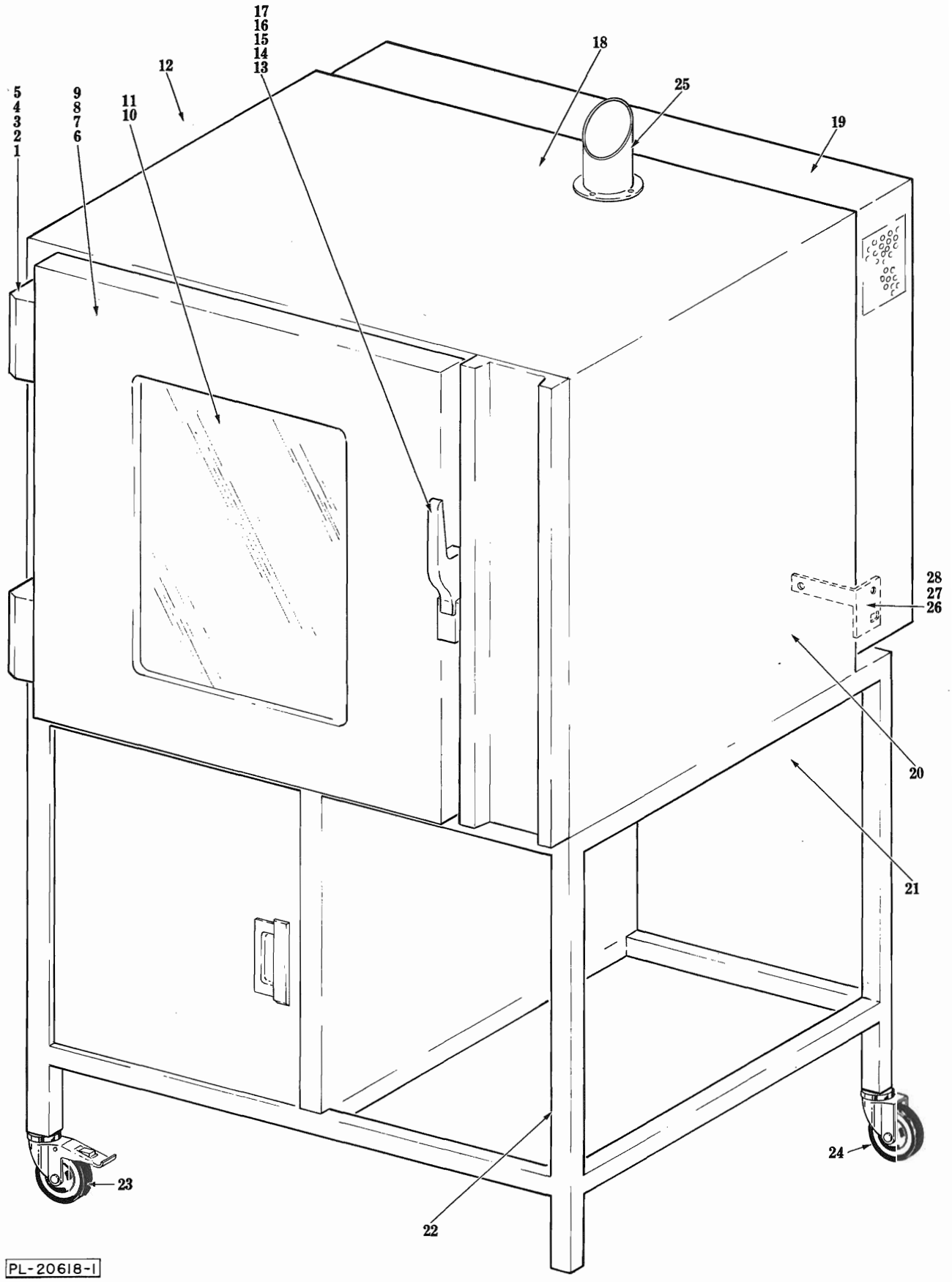

DOOR AND EXTERNAL PANELS

DOOR AND EXTERNAL PANELS

ILLUS. PL-20618-1	PART NO.	NAME OF PART[16]	AMT.
1	149921	Hinge - Door	2
2	149940-31	Shim - Hinge	AR
3	SC-118-36	Mach. Screw M5 x 0.8 x 16MM Flat Hd	6
4	SC-118-35	Mach. Screw M5 x 0.8 x 25MM Flat Hd	8
5	149926-2	Fastener Assy. (M5 Square Nut)	8
6	149950-28	Oven Door Assy. (Incls. items 7 thru 11)	1
7	149944-3	Seal - Door	1
8	149950-30	Panel - Interior Door	1
9	149950-29	Panel - Exterior Door	1
10	149913-1	Glass - Oven Door	1
11	149915-3	Seal - Glass	2
12	149950-5	Panel - L.H. Side	1
13	149920	Handle & Latch Assy. (Incls. item 14 & Latch)	1
14	149920-1	Handle - Door	1
15	SC-118-34	Mach. Screw M5 x 0.8 x 40MM Flat Hd	2
16	149940-64	Spacer - Thread	1
17	149926-2	Fastener Assy. (M5 Square Nut)	2
18	149950-4	Panel - Top	1
19	149990-4	Panel - Rear (Motor Side)	1
20	149950-6	Panel R.H. Side	1
21	149950-1	Panel Bottom	1
22	149990-42	Frame Assy	1
23	149981	Caster - Swivel (W/Double Brake) (Front)	2
24	149982	Caster - Swivel (Rear)	2
25	149990-7	Chimney Assy	1
26	149950-10	Bracket - Cover Support (R.H.)	1
27	149950-11	Bracket - Cover Support (L.H.)	1
28	149926-1	Fastener Assy. (M4)	2
	149990-35	Plug (Plugs Holes in Oven bottom)	4
	SC-118-56	Cap Screw M12 x 1.75 x 30MM Hex Hd. (Used to Hold Caster to Leg)	4

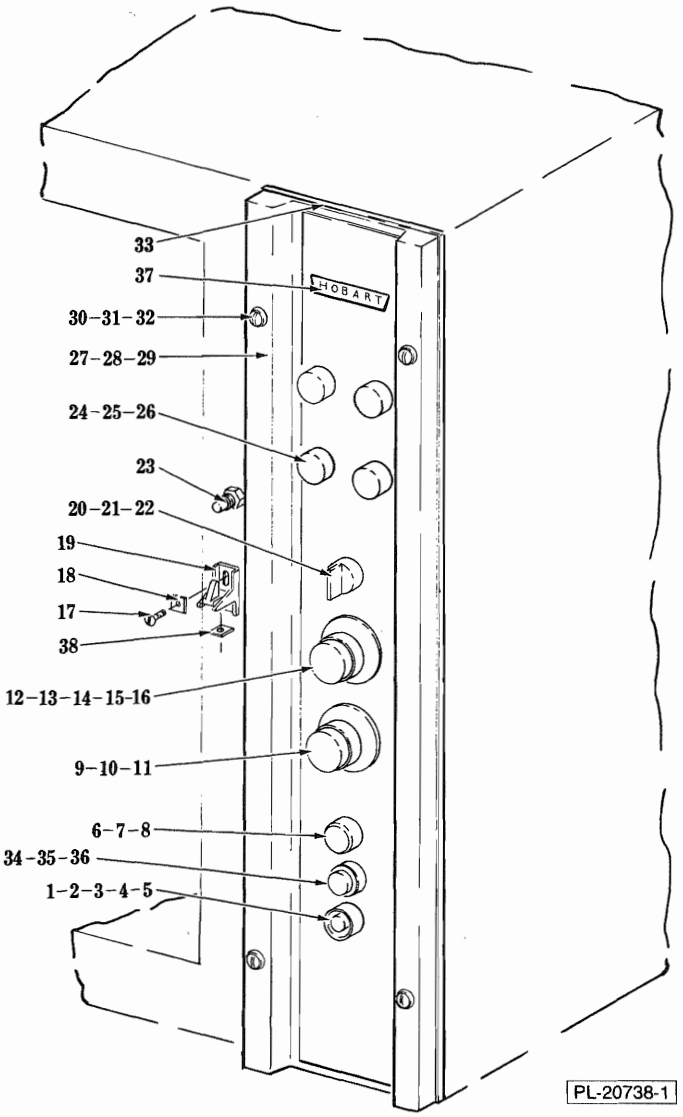

CONTROL PANEL

CONTROL PANEL

ILLUS. PL-20738-1	PART NO.	NAME OF PART[16]	AMT.
1	149948	Button - Motor Reset	1
2	40651-7	Contactor	1
3	SC-118-28	Mach. Screw M4 x 0.7 x 12MM Pan Hd	2
4	40652-19	Relay - Motor Overload	1
5	87714-27-1	Buzzer	1
6	149952	Button - Push	1
7	147525-1	Block & Base - Switch Contact (Incls. item 8)	1
8	146916-1	Block - Switch Contact	1
9	149946	Knob - Timer	1
10	149998-1	Timer	1
11	SC-118-24	Mach. Screw M3 x 0.5 x 10MM Flat Hd	2
12	149946	Knob - Thermostat	1
13	347961-1	Thermostat (Robert Shaw)	1
14	149999-5	Sleeving (⅜ x 31½) (Protects Capillary Tube)	1
15	SC-114-83	Mach. Screw 6-32 x ¼ Pan Hd	2
16	293123	Kit - Thermostat (Converts EGO to Robert Shaw)	1
17	SC-118-31	Mach. Screw M5 x 0.8 x 16MM Pan Hd	2
18	149940-47	Cover - Door Latch	2
19	149920-2	Latch - Door Handle	1
20	228500-2	Operator - Switch	1
21	147525-1	Block & Base - Switch Contact (Incls. 1 of item 22)	1
22	146916-1	Block - Switch Contact	5
23	149997	Switch - Door Interlock	1
24	228501-4	Bulb - 24 V. Pilot Light	4
25	149922-1	Lens Cover Assy	4
26	149914	Base - Pilot Light (W/O Bulb)	4
27	149990-68	Control Panel Assy	1
28	149940-52	Cable - Control Panel Restraint	1
29	150200-1	Sleeving (½ x 12) (Used on Panel Restraint)	1
30	SC-118-38	Mach. Screw M4 x 0.7 x 50MM Flat Hd	4
31	WC-6-9	Washer - Countersunk	4
32	149926-1	Fastener Assy. (M4)	4
33	149915-1	Seal - Control Panel	1
34	293126-1	Potentiometer	1
35	293127	Knob - Control Panel	1
36	149950-57	Bracket - Relay Support	1
37	149940-76	Cover - Door Latch (Oblong)	1
38	149990-67	Panel - Control Panel Overlay	1

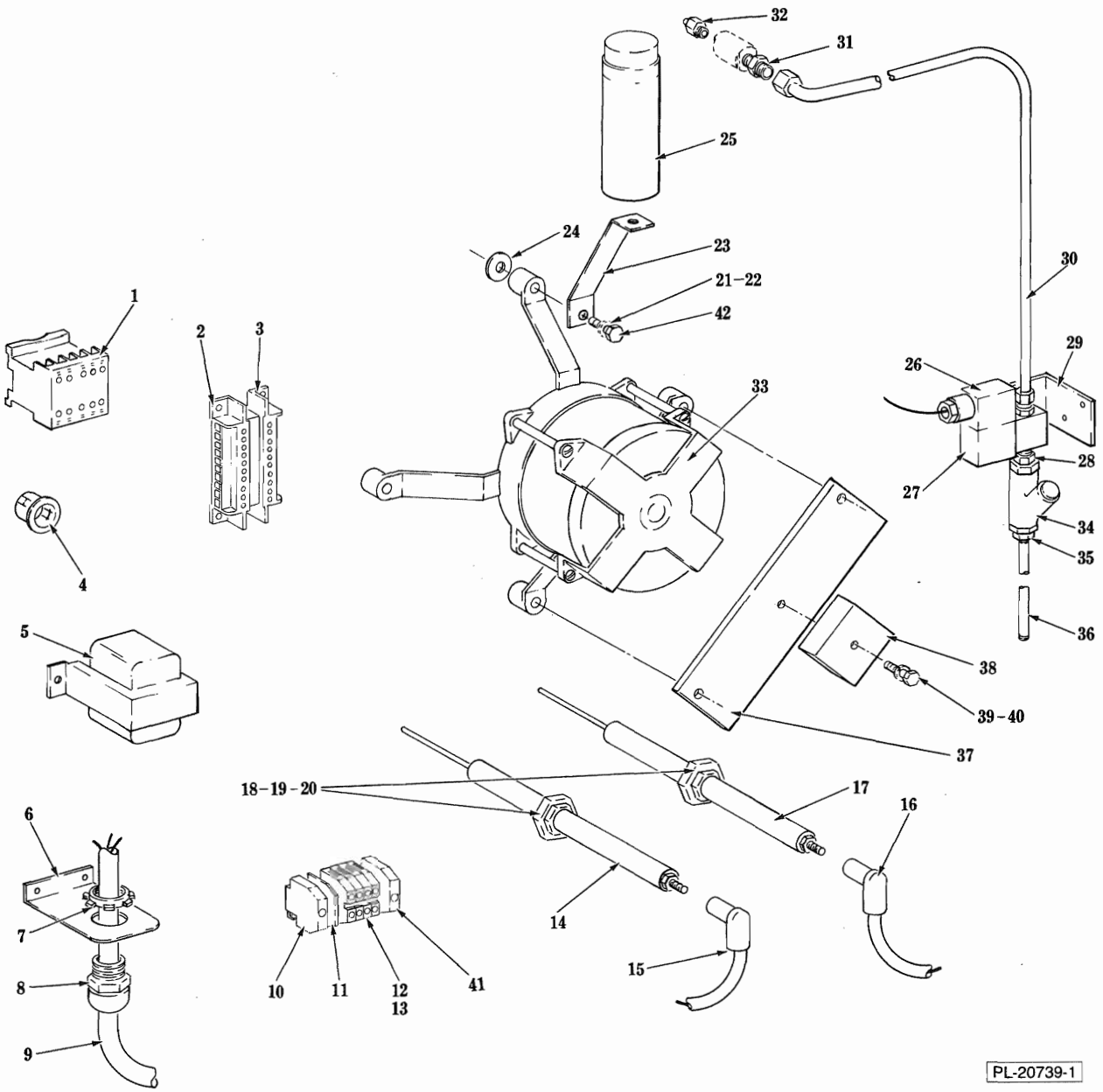
32
31
25
24
23
21–22
42
30
1
2
3
33
26
29
28
27
34
35
4
36
5
38
39–40
37
18–19–20
17
16
6
7
14
8
10
11
12
13
41
15
9
PL-20739-1

ELECTRICAL

GAS PIPING

ILLUS. PL-20737-1	PART NO.	NAME OF PART[16]	AMT.
1	149990-33	Bracket - Motor Support	1
2	149989-1	Motor - Blower (Incls. Capacitor)	1
3	149990-27	Bracket - Motor Support	2
4	FP-81-64	Elbow ¾ to ½ 90° Reducing Street	1
5	335997-1	Valve - Shut-Off	1
6	FP-35-91	Nipple ½ × 1⅛ (T.B.E.)	1
7	FE-6-46	Clamp - Pipe Support	1
8	FP-59-73	Pipe - ½ × 14 7/16	1
9	FP-77-68	Elbow ½ × 90°	1
10	FP-58-50	Nipple ½ × 4.0 (T.B.E.)	1
11	FP-13-17	Elbow ½ × 90° Street	1
12	FP-22-11	Union - ½	1
*13	293054-1	Gas Valve - Redundant (Natural Gas)	1
14	293054-2	Gas Valve - Redundant (Propane Gas)	1
15	293104	Spark Ignitor - Gas	1
16	149990-34	Injector Assy. (Elbow)	1
17	149953-12	Injector (#440) Natural Gas	1
18	149953-11	Injector (#270) Propane Gas	1
19	149992-2	Diaphragm Assy	1
20	293111	Cable Assy. (Spark Ignitor)	1
21	149990-30	Sleeve - PVC	1
22	149990-28	1¼ Piping Assy	1
23	FP-22-28	Union - 1¼	1
24	FP-16-25	Elbow ¼ to ⅛ Reducing	1
25	293058	Pressure Switch	1
26	149990-29	Cover	1
27	FP-24-6	Coupling - ½ to ⅜ Reducing	1
28	FP-35-10	Nipple ⅛ × 1⅞ (T.B.E.)	1
29	149966-2	Plug - Brass	1
30	FP-35-46	Nipple ⅜ × 1 (T.B.E.)	1
31	149990-25	Support - Pipe	1
32	149990-26	Bracket - Pipe Support	2

ELECTRICAL

ILLUS. PL-20739-1	PART NO.	NAME OF PART[16]	AMT.
1	149977-1	Contactor - Auxiliary	1
2	149902-1	Connector - Male	1
3	149902-2	Connector - Female	1
4	FE-23-56	Bushing - Heyco #2123	3
5	294500-13	Transformer	2
6	149990-21	Bracket - Service Entry	1
7	FE-6-5	Lock Nut - Strain Relief	1
8	FE-22-84	Strainer Relief	1
9	117542-26	Cord & Plug	1
10	149912	End - Terminal Block	1
11	149911-3	Barrier	1
12	15021	Block - Terminal	4
13	149908	Block - Terminal	1
14	149993-2	Electrode - Sensing	1
15	293113	Wire Lead Assy. (Hi-Voltage, BLACK)	1
16	293110	Wire Lead Assy. (Hi-Voltage, RED)	1
17	149993-1	Electrode - Ignition	1
18	149990-40	Nut - Electrode Support	2
19	149972-2	"O" Ring	4
20	149974	Ring - Retaining	2
21	WL-19-57	Lock Washer - DE6 Ext. Shakeproof	4
22	WS-30-19	Washer	1
23	149990-19	Bracket - Capicator	1
24	149940-24	Washer - Motor Support	4
25	149990-3	Capacitor - Motor	1
26	293105-1	Coil - Solenoid Valve (24 V.)	1
27	293052-1	Solenoid Valve (24 V.) (Incls. item 26)	1
28	149973-1	Nipple - Reducing	1
29	149940-17	Support - Water Solenoid	1
30	149950-21	Tube - Injector	1
31	149963-1	Fitting - Injector Tube	2
32	149950-66	Injector	1
33	149931-3	Motor - Fan (120/60/1)	1
34	149968	Line - Strainer	1
35	FP-27-42	Bushing - Reducing 3/8 to 1/4	1
36	FP-81-48	Pipe 1/4 x 6 T.B.E	1
37	149950-60	Bracket - Relay Timer	1
38	87714-25	Relay - Time Delay	1
39	WL-19-57	Lock Washer DE 6 Ext. Shakeproof	1
40	SC-119-10	Cap Screw M6 x 1 3/16	1
41	149912	End - Terminal Block	1
42	SC-118-44	Cap Screw M6 x 1.0 x 40MM Hex	4
	149940-63	Label - Motor Rotation	1
	539847	Cable Tie (Hi-Temperature)	AR

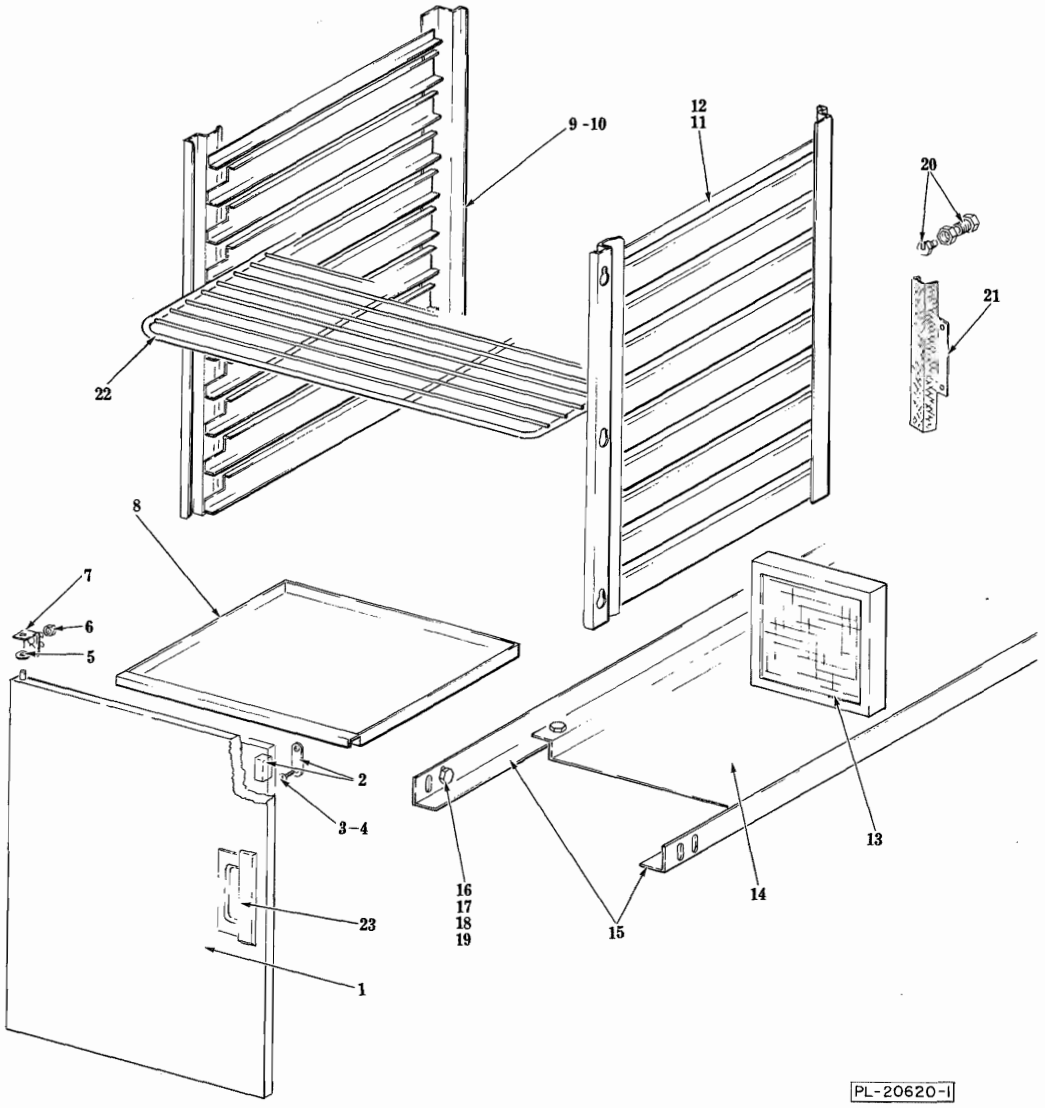

MISCELLANEOUS

MISCELLANEOUS

ILLUS. PL-20620-1	PART NO.	NAME OF PART[16]	AMT.
1	149990-45	Door Assy. (Incls. items 2, 3, 4 & 23)	1
2	149990-1	Latch - Magnetic	2
3	SC-118-26	Mach. Screw M4 x 0.7 x 10MM Flat Hd	4
4	149985-3	Nut & Lock Washer Assy. — M4	4
5	WS-30-19	Washer	1
6	NS-47-33	Mach. Nut - M5 x 0.8 Hex Thin	2
7	149990-46	Upper Hinge Pin Assy	1
8	149990-43	Pan - Drip	1
9	149990-50	L.H. Oven Rack Assy. (W/Deflector) (10 Shelves)	1
10	149990-65	Oven - RAck (L.H.) (7 Shelves)	1
11	149990-49	R.H. Oven Rack Assy. (10 Shelves)	1
12	149990-64	Oven - Rack (R.H.) (7 Shelves)	1
13	149990-31	Metal Filter Assy. (Gas Burner) (200 x 200 x 40)	1
14	149990-23	Panel - Gas Equipment	1
15	149990-44	Support - Equipment Panel	2
16	SC-118-43	Cap Screw M6 x 1.0 x 20MM Hex Hd	4
17	WL-14-10	Lock Washer ¼ Ext. Shakeproof	4
18	WS-29-13	Washer	4
19	NS-47-13	Mach. Nut M6 x 1.0 Hex	3
20	149933	Fitting - Bulkhead (Capillary Tube)	1
21	149940-88	Support - Capillary Tube	1
22	293114	Grill (Chromed) (Carton of 5)	1
23	149995	Handle	1
	270731	Grill (SST) (Carton of 5)	1
	149926-1	Fastener Assy. (M4 Square Nut & Retainer)	AR
	149926-2	Fastener Assy. (M5 Square Nut & Retainer)	AR
	149926-3	Fastener Assy. (M6 Square Nut & Retainer)	AR

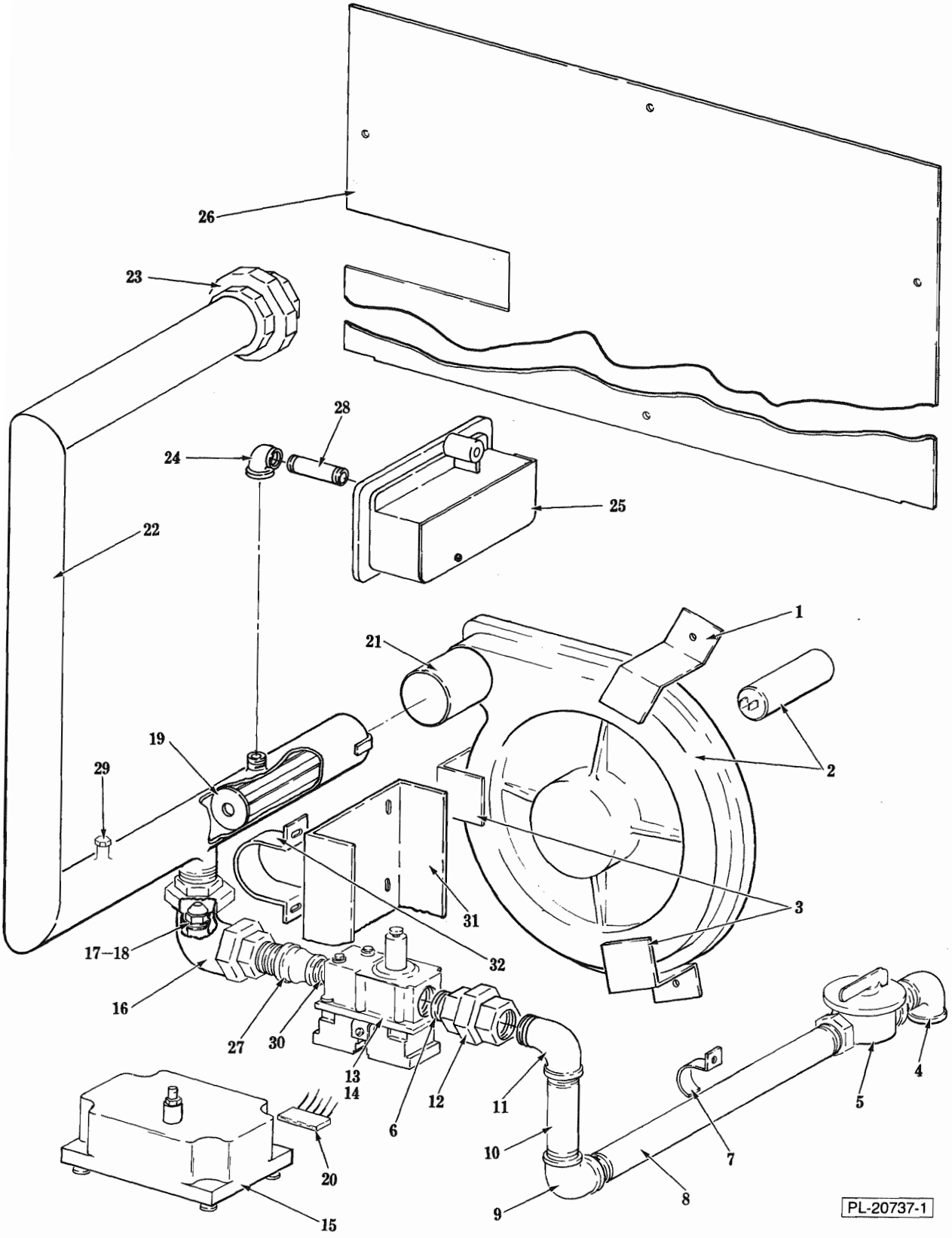
26
23
28
24
25
22
1
21
2
19
29
3
31
17–18
32
16
27
30
13
14
12
11
6
4
5
10
7
20
8
9
15
PL-20737-1

GAS PIPING

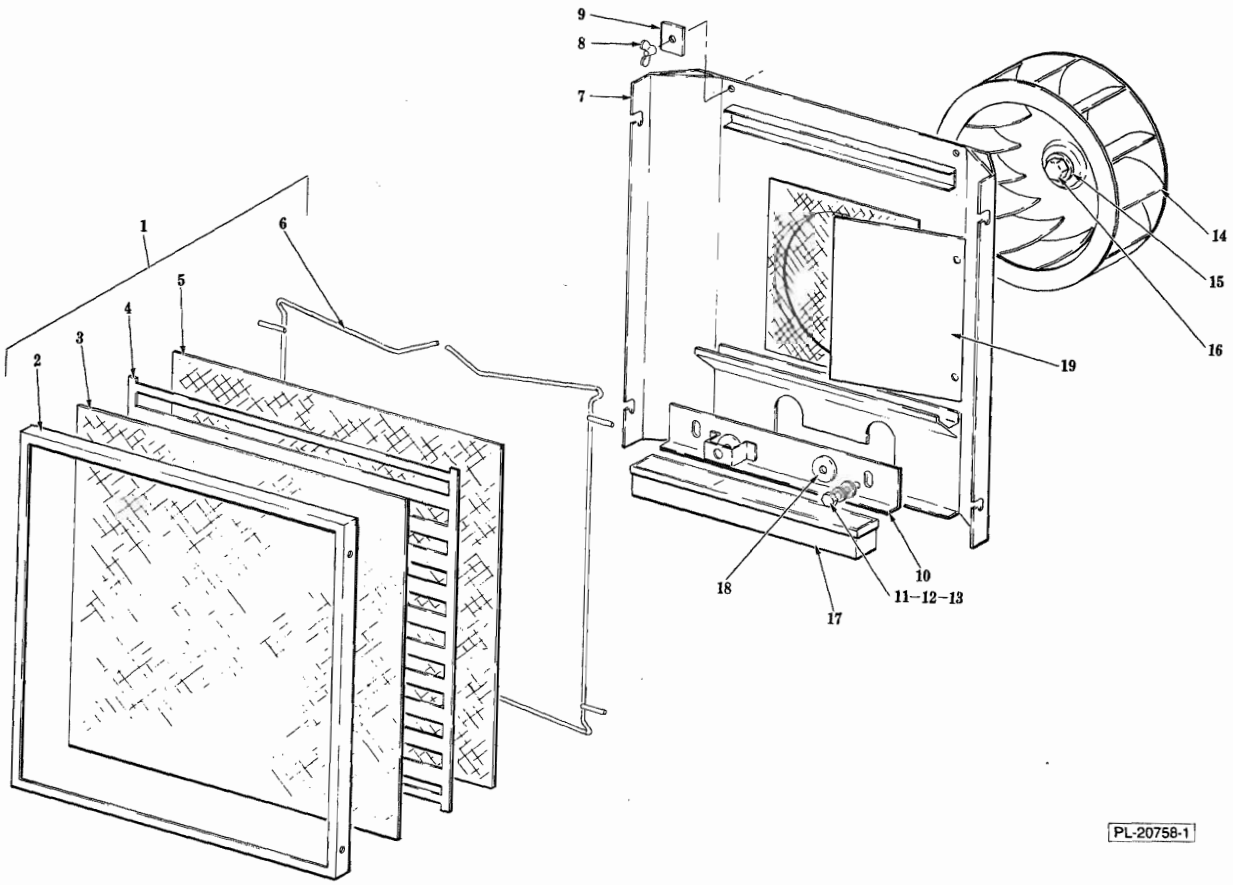

BLOWER AND FILTER

ILLUS. PL-20758-1	PART NO.	NAME OF PART16	AMT.
1	149990-13	Filter Assy. (Incls. items 2 thru 6)	1
2	149950-24	Frame - Blower Filter	1
3	149990-14	Filter - Metal (10MM × 10MM × 06MM Thk.)	1
4	149990-16	Filter Interior Assy	1
5	149990-15	Filter Metal (16MM × 10MM × 10MM Thk.)	1
6	149950-25	Clip - Filter	2
7	149990-9	Exhaust Assy	1
8	NS-47-46	Wing Nut - M5	2
9	149940-34	Plate - Washer	2
10	149990-11	Bracket - Spacer Electrode	1
11	SC-118-47	Cap Screw M6 × 1.0 × 16MM Hex Hd	2
12	WL-14-10	Lock Washer ¼ Ext. Shakeproof	2
13	WS-29-13	Washer	2
14	149940-35	Blower Wheel	1
15	149940-24	Washer - Fan	1
16	SC-118-43	Cap Screw M6 × 1.0 × 20MM Hex Hd	1
17	149990-36	Burner - Gas (20KW)	1
18	149990-12	Socket - Electrode Support	2
19	149990-10	Deflector	1