HOBART

SERVICE

CATALOG OF REPLACEMENT PARTS



FP400i FOOD PROCESSOR

ML-136343 **FP400i**

A Product of Hobart Service 701 S. Ridge Ave Troy, OH 45374

FORM F43345 Rev. C (August 2026)

 © HOBART SERVICE 2026

Table of Contents

4 F43345 COVER
6 HOUSING UNIT
8 MOTOR AND GEARING
10 FEED CYLINDER (CUTTING)
12 FEED CYLINDER (STACKING)
14 FEED CYLINDER AND HOPPER
16 MANUAL PUSH FEEDER
18 4-TUBE INSERT ASSEMBLY
20 ELECTRICAL BOX ASSEMBLY
22 ACCESSORIES (SLICER / JULIENNE)
24 ACCESSORIES (SHREDDER / GRATER / DICER)
26 ACCESSORIES (MISC.)

HOBART

CATALOG OF REPLACEMENT PARTS



FP400i FOOD PROCESSOR

ML-136343 **FP400i**

A product of HOBART 701 S. RIDGE AVENUE TROY, OHIO 45374-0001

FORM 43345

F43345 COVER

F43345 COVER

ILLUS.	PART NO.	NAME OF PART	AMT.
PL-F43345 TIS COVER			
	ML-136343		AR

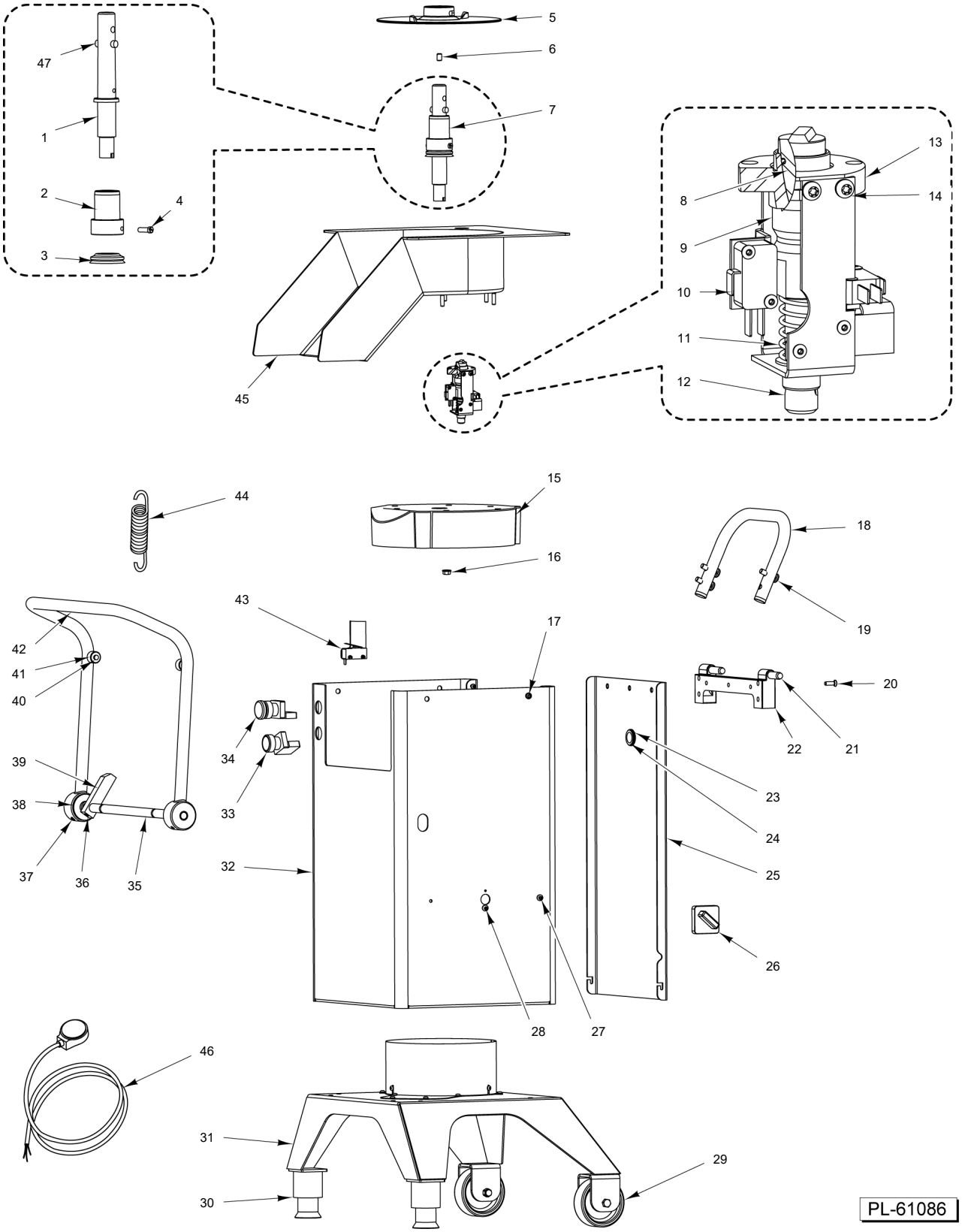

HOUSING UNIT

HOUSING UNIT

ILLUS. PL-61086	PART NO.	NAME OF PART	AMT.
1	00-915789	Shaft - Knife	1
2	00-915790	Rod - Feeder	1
3	00-439129	Seal - Washer	1
4	00-915804	Pin - Carrier - Ejector Plate	2
5	00-915788	Plate - Ejector	1
6	SC-121-48	Set Screw M8 x 1.25 x 12mm Socket Hdls., Cup Pt. (SST)	1
7	00-915803	Shaft - Knife Assy. (Incls. Items 1 thru 4)	1
8	00-478875	Seal - O-Ring	2
9	00-915809	Shaft	1
10	00-915792	Switch & Bracket Assy.	2
11	00-939211	Spring - Interlock Switch	1
12	00-915810	Bushing	1
13	00-915808	Housing - Switch	1
14	00-915791	Screw M4	4
15	00-915806	Base - Top	1
16	00-915807	Nut M6	6
17	SC-124-31	Mach. Screw M6 x 1 x 16mm Slotted Truss Hd. (SST)	4
18	00-478830	Handle - Knife Chamber	1
19	00-915812	Screw M6	4
20	00-915816	Screw	3
21	00-915817	Seal - Ring	1
22	00-915818	Hinge	1
23	FE-024-97	Relief - Strain	1
24	00-479036	Nut - Strain Relief	1
25	00-915819	Housing - Back	1
26	00-479035	Switch - Speed Assy. (Incls. Hardware)	1
27	00-915820	Screw M4-20	2
28	00-915791	Screw M4	2
29	00-915823	Wheel	2
30	00-915802	Foot Assy.	1
31	00-915801	Base	1
32	00-915800	Housing - Machine Front	1
33	00-478898	Switch Assy. (Start)	1
34	00-478897	Switch Assy. (Stop)	1
35	00-915799	Shaft - Handle Lock	1
36	SC-124-27	Set Screw M8 x 1.25 x 15mm Slotted Hdls. Dog Pt. (SST)	1
37	SC-124-28	Set Screw M8 x 1.25 x 25mm Slotted Hdls. Dog Pt. (SST)	2
38	00-478823	Bushing - Lock Handle	2
39	00-478828	Stop - Lock Handle	1
40	00-478876	Ring Lock	2
41	00-915863	Knob	2
42	00-915798	Handle - Locking	1
43	00-939228	Switch - Micro, Bracket Assy	1
44	00-478831	Spring - Tension	2
45	00-915805	Housing - Knife	1
46	00-478853	Cord - Supply (US)	1
47	00-439124	Pin - Carrier	1

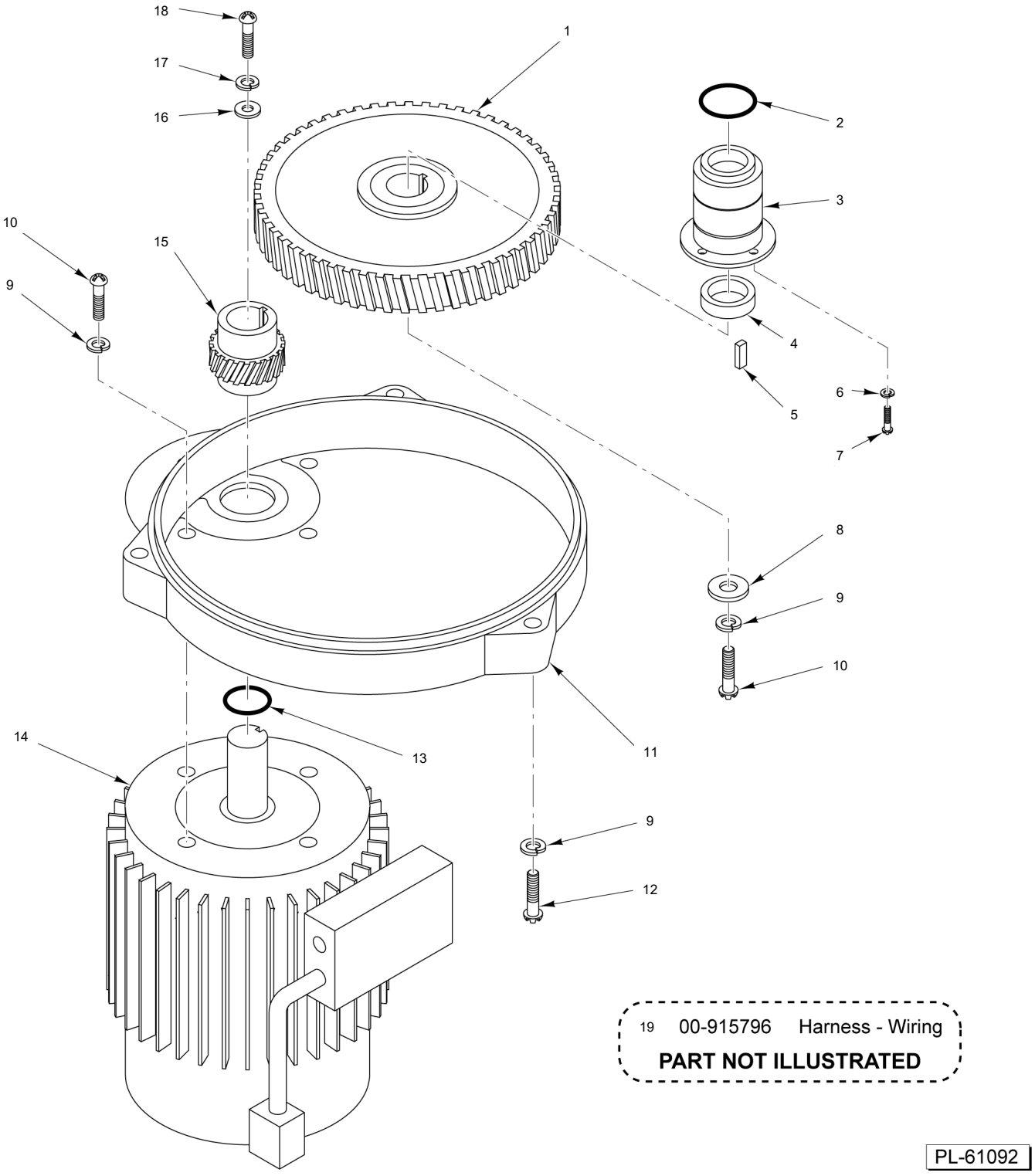

19 00-915796 Harness - Wiring

PART NOT ILLUSTRATED

PL-61092

MOTOR AND GEARING

MOTOR AND GEARING

ILLUS. PL-61092	PART NO.	NAME OF PART	AMT.
1	00-915813	Gear Assy.	1
2	00-478871	Ring - Seal	1
3	00-915793	Ball Bearing Assy.	1
4	00-478811	Spacer	1
5	00-478872	Key	1
6	WL-019-75	Lockwasher M10 5.1mm Helical (SST)	4
7	SC-118-37	Mach. Screw M5 x 0.8 x 12mm Slotted Pan Hd. (SST)	4
8	00-478846	Washer	1
9	WL-019-74	Lockwasher M8 Spring (SST)	8
10	SC-121-16	Cap Screw M8 x 1.25 x 22mm Hex Hd. (SST)	4
11	00-915794	Housing - Gear	1
12	SC-121-56	Cap Screw M8 x 1.25 x 60mm Socket Hex Hd	1
13	00-478882	Ring - Seal	1
14	00-915815	Motor	1
15	00-915814	Gear Assy.	1
16	00-478847	Washer	1
17	WL-019-89	Lockwasher M10 Helical (SST)	1
18	SC-125-23	Cap Screw 6-32 x 3/4 Hex Socket Hd. (SST)	1
19	00-915796	Harness - Wiring	1

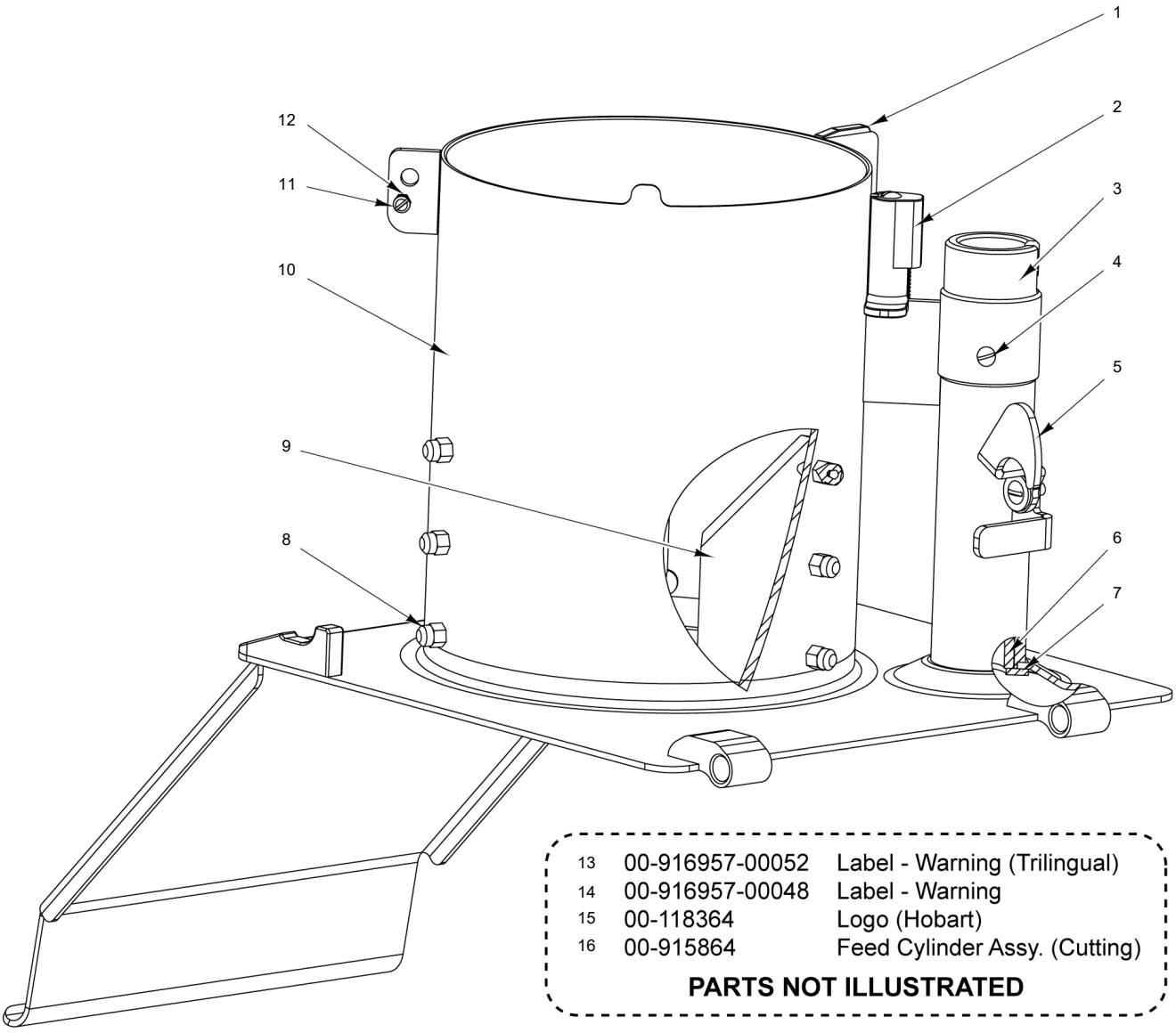

13	00-916957-00052	Label - Warning (Trilingual)
14	00-916957-00048	Label - Warning
15	00-118364	Logo (Hobart)
16	00-915864	Feed Cylinder Assy. (Cutting)

PARTS NOT ILLUSTRATED

PL-61087

FEED CYLINDER (CUTTING)

FEED CYLINDER (CUTTING)

ILLUS. PL-61087	PART NO.	NAME OF PART	AMT.
1	00-915847	Knob - Slide	1
2	00-915848	Stopper Assy.	1
3	00-478863	Sleeve - Bayonet	1
4	SC-124-30	Mach. Screw M5 x 0.8 x 10 mm Slotted Oval Hd. (SST)	1
5	00-915833	Locking Clutch Assy.	1
6	00-915835	Bushing	1
7	00-915843	Bushing Holder Assy.	1
8	00-478858	Nut - Special Domed	1
9	00-478842	Knife	1
10	00-915844	Feed Cylinder	1
11	00-915845	Screw	1
12	00-915846	Nut	1
13	00-916957-00052	Label - Warning (Trilingual)	1
14	00-916957-00048	Label - Warning	1
15	00-118364	Logo (Hobart)	1
16	00-915864	Feed Cylinder Assy. (Cutting) (Incls. Items 1 thru 15)	1

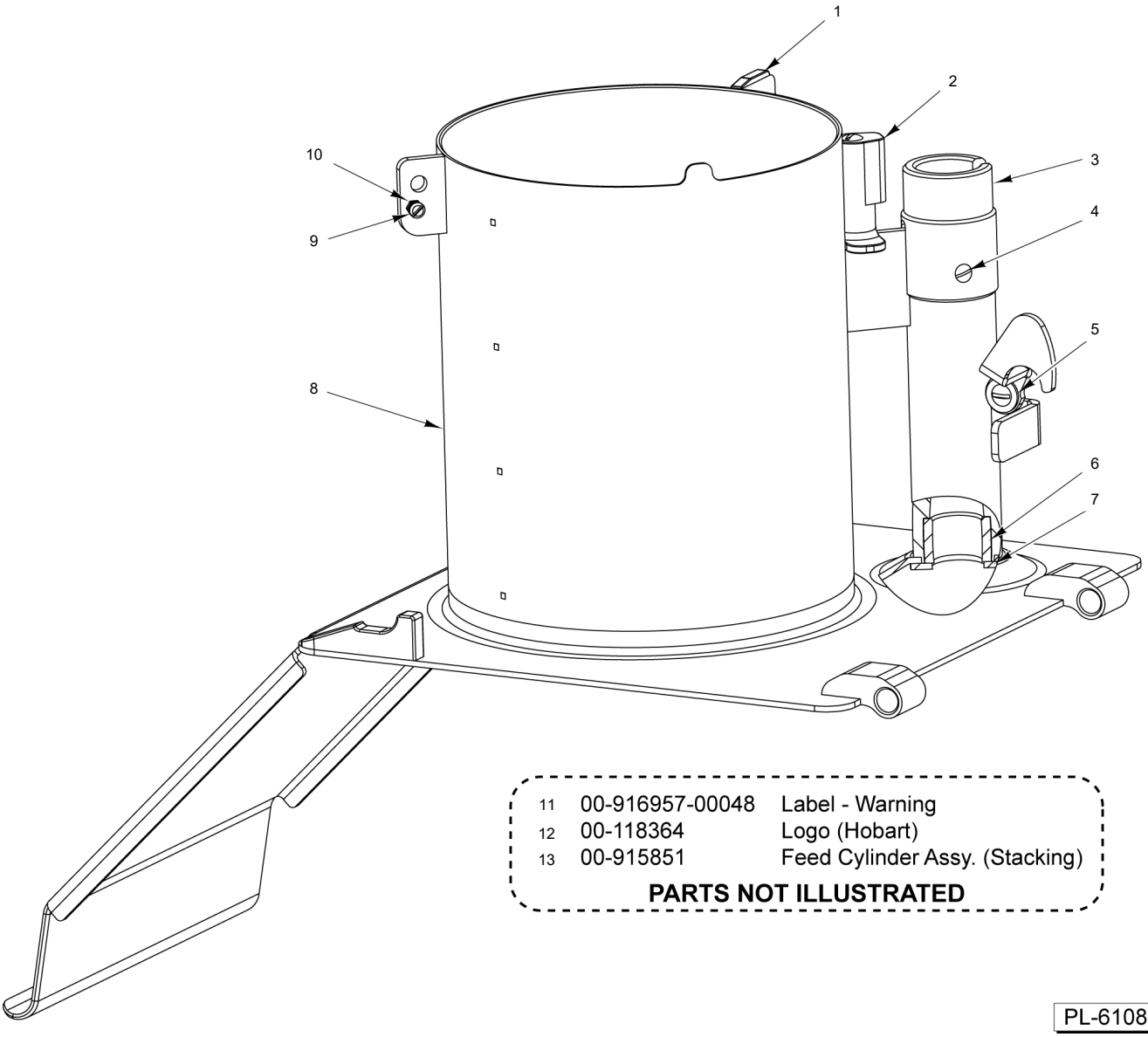

11	00-916957-00048	Label - Warning
12	00-118364	Logo (Hobart)
13	00-915851	Feed Cylinder Assy. (Stacking)

PARTS NOT ILLUSTRATED

PL-61088

FEED CYLINDER (STACKING)

FEED CYLINDER (STACKING)

ILLUS. PL-61088	PART NO.	NAME OF PART	AMT.
1	00-915847	Knob - Slide	1
2	00-915848	Stopper Assy.	1
3	00-478863	Sleeve - Bayonet	1
4	SC-124-30	Mach. Screw M5 x 0.8 x 10 mm Slotted Oval Hd. (SST)	1
5	00-915833	Locking Clutch Assy.	1
6	00-915835	Bushing	1
7	00-915843	Bushing Holder Assy.	1
8	00-915852	Cylinder - Feed	1
9	00-915845	Screw	1
10	00-915846	Nut	1
11	00-916957-00048	Label - Warning	1
12	00-118364	Logo (Hobart)	1
13	00-915851	Feed Cylinder Assy. (Stacking) (Incls. Items 1 thru 12)	1

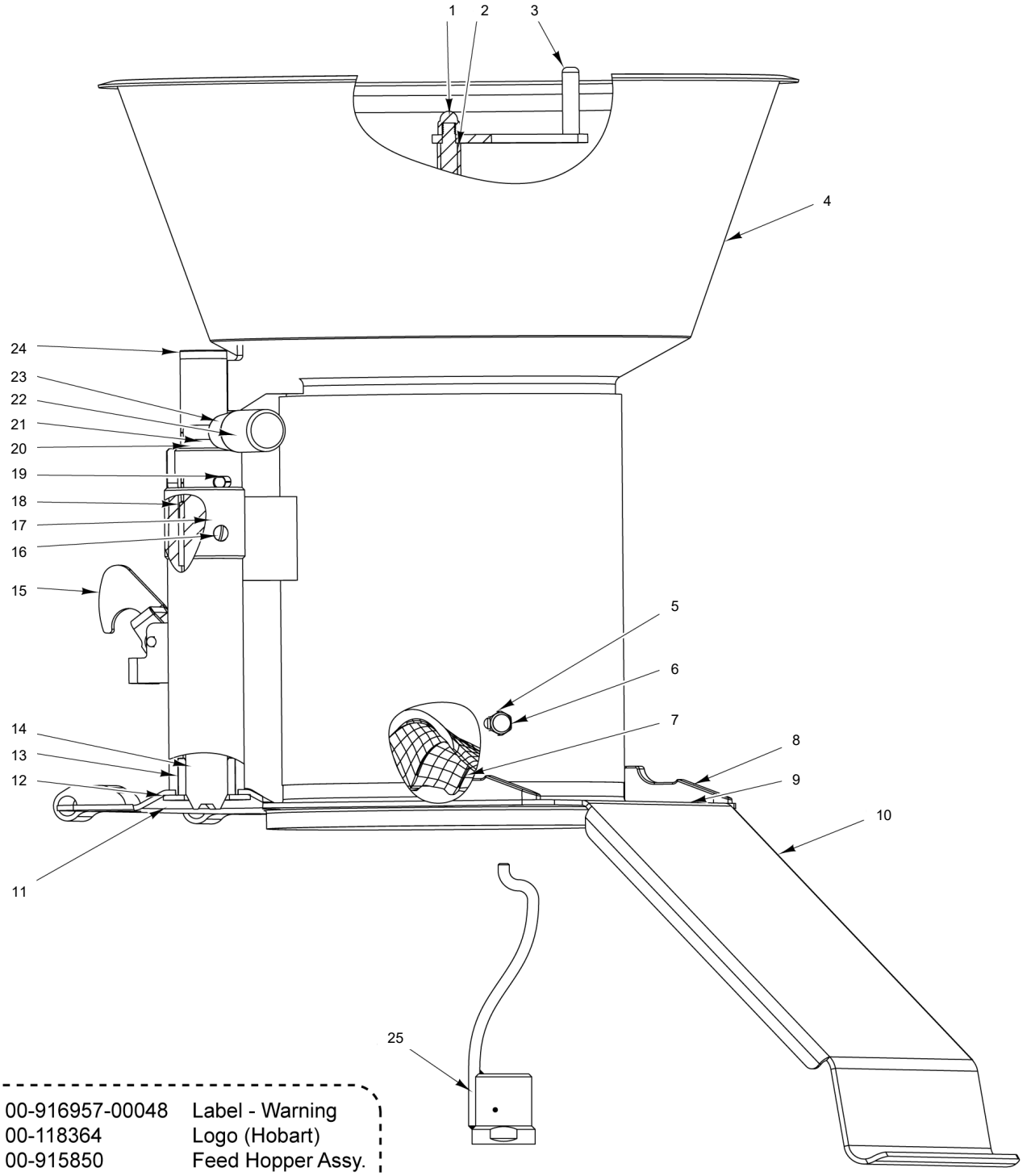

26	00-916957-00048	Label - Warning
27	00-118364	Logo (Hobart)
28	00-915850	Feed Hopper Assy.

PARTS NOT ILLUSTRATED

FEED CYLINDER AND HOPPER

FEED CYLINDER AND HOPPER

ILLUS. PL-61090	PART NO.	NAME OF PART	AMT.
1	NS-048-42	Crown Nut M8 x 1.25 (SST)	1
2	00-478860	Lever - Stir	1
3	00-914953	Arm - Hopper	1
4	00-915838	Insert - Hopper Assy.	1
5	NS-047-34	Crown Nut M6 x 1mm (SST)	1
6	00-478906	Rod - Threaded	1
7	00-915839	Guide	1
8	00-915840	Bracket - Locking	1
9	00-915841	Screw - MFS M4 x 6 A2 70	1
10	00-915842	Cylinder - Feed	1
11	00-915837	Screw M3 x 4 Flat Hd.	1
12	00-915836	Bushing - Housing	1
13	00-915835	Bushing	1
14	00-915834	Shaft	1
15	00-915833	Locking Clutch Assy.	1
16	SC-124-30	Mach. Screw M5 x 0.8 x 10 mm Slotted Oval Hd. (SST)	1
17	00-478863	Sleeve - Bayonet	1
18	00-478865	Bushing	1
19	00-478841	Pin - Bayonet	1
20	00-478890	Ball	1
21	00-478889	Spring	1
22	00-478883	Handle	1
23	00-477254	Screw - Handle	1
24	00-478884	Plug	1
25	00-478862	Agitator - Screw (Use to Secure Cutting Plates)	1
26	00-916957-00048	Label - Warning	1
27	00-118364	Logo (Hobart)	1
28	00-915850	Feed Hopper Assy. (Incls. Items 1 thru 27)	1

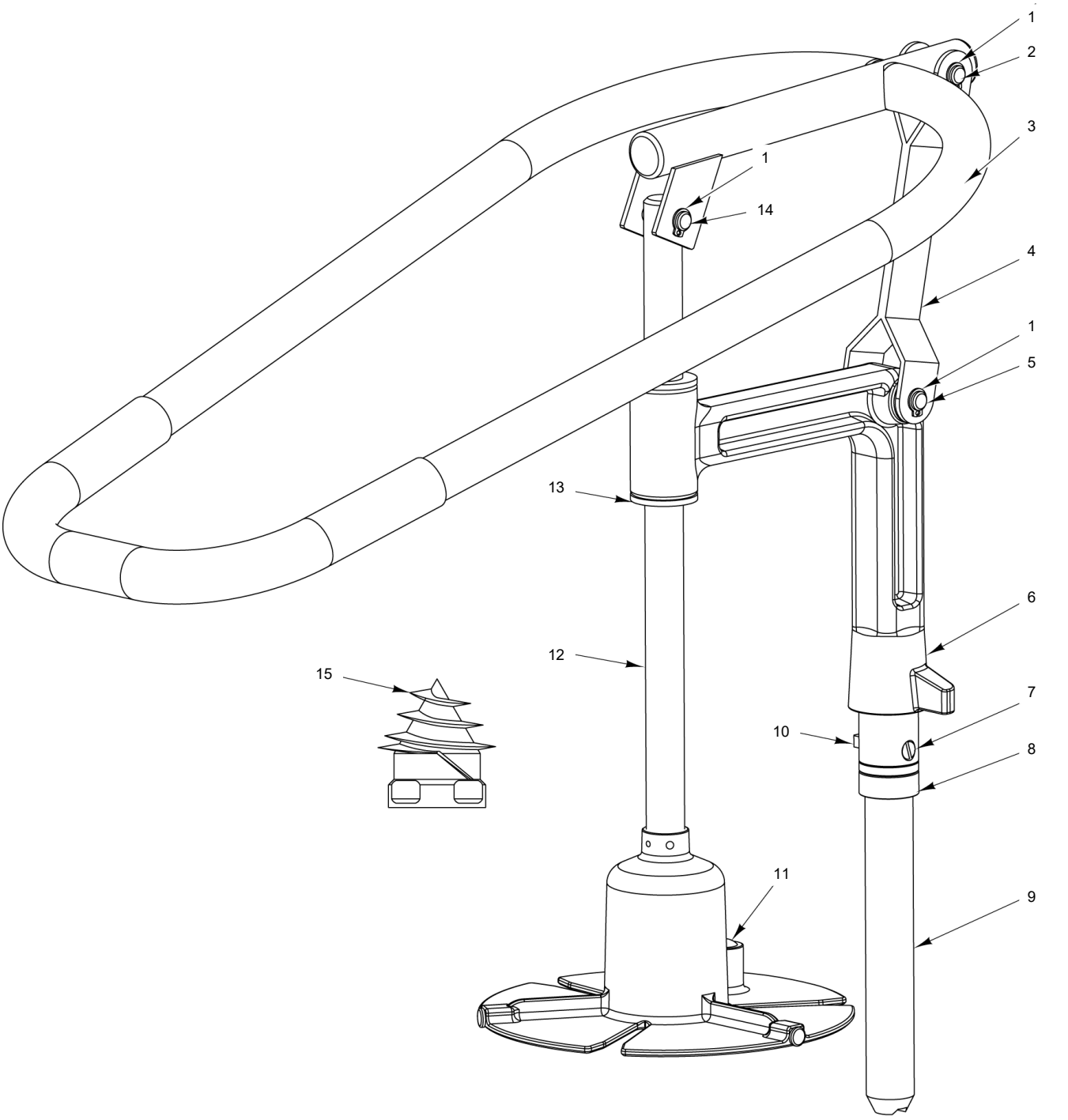

16	00-915865	Manual Feed Pusher Assy.

PART NOT ILLUSTRATED

PL-61089

MANUAL PUSH FEEDER

MANUAL PUSH FEEDER

ILLUS. PL-61089	PART NO.	NAME OF PART	AMT.
1	00-478880	Ring - Locking	3
2	00-478869	Pin - Pivot (L38)	1
3	00-944010	Handle - Push	1
4	00-478815	Link	1
5	00-478868	Pin - Pivot (L51)	1
6	00-915831	Stand	1
7	00-915934	Shaft	1
8	00-478819	Bushing	1
9	00-478814	Stand - Shaft	1
10	00-478856	Pin - Stand	1
11	00-478888	Plug V	1
12	00-915839	Guide	1
13	00-915829	Bushing	1
14	00-478870	Pin - Pivot (L34)	1
15	00-478939	Screw - Decoring	1
16	00-915865	Manual Feed Pusher Assy. (Incls. Items 1 thru 15)	1

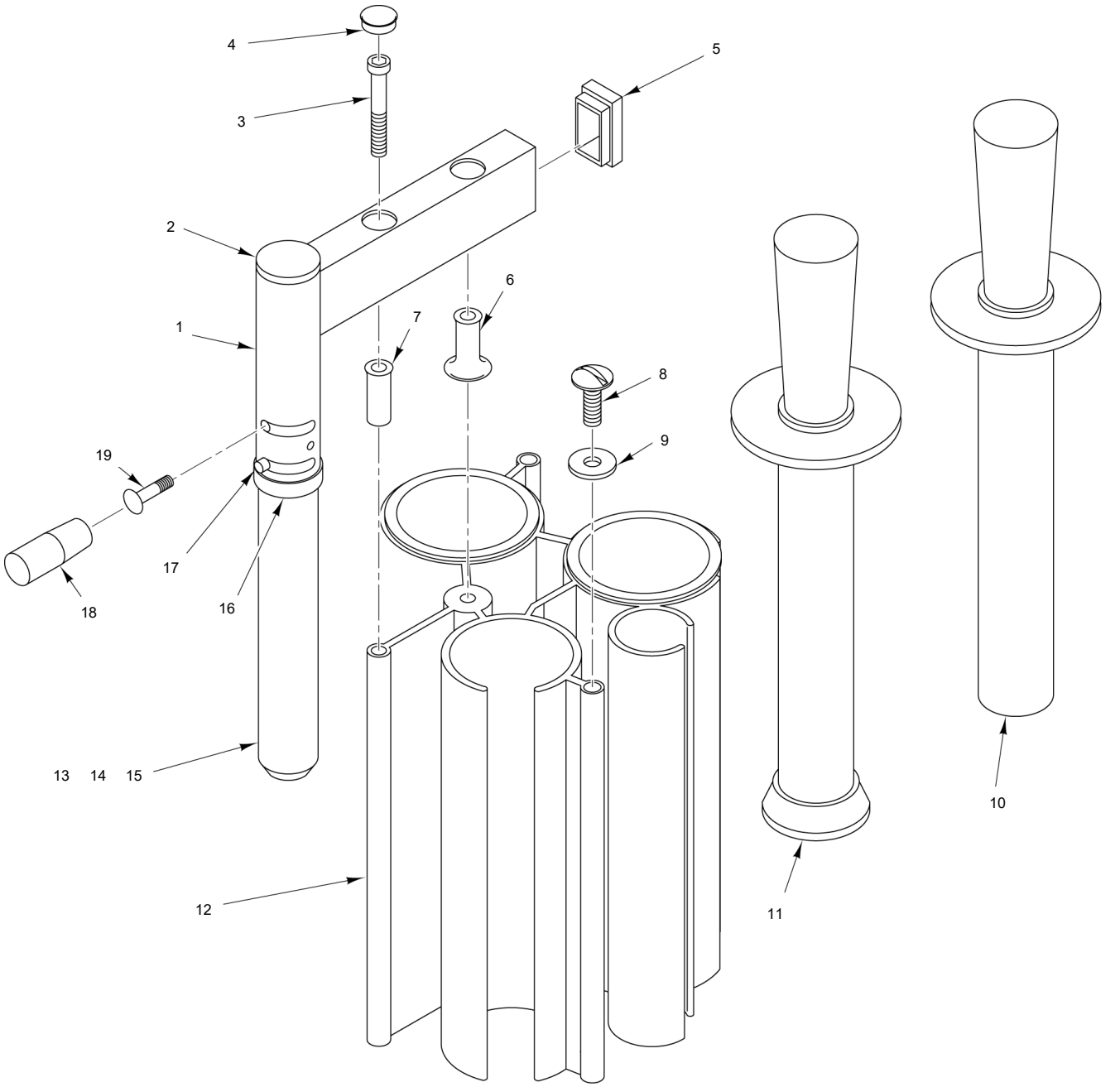

20	00-915849	Tube Assy.

PART NOT ILLUSTRATED

PL-61091

4-TUBE INSERT ASSEMBLY

4-TUBE INSERT ASSEMBLY

ILLUS. PL-61091	PART NO.	NAME OF PART	AMT.
1	00-915827	Stand	1
2	00-478884	Plug	1
3	SC-117-18	Cap Screw M8 x 1.25 x 40mm Soc. Hex Hd.	2
4	00-479574	Plug (1 KPT)	2
5	00-479573	Plug - Rectangle (IR20)	1
6	00-479572	Spacer - Flanged	1
7	00-479571	Spacer	1
8	SC-119-03	Mach. Screw M8 x 1.25 x 16mm Slotted Mushroom Hd. (SST)	2
9	00-915824	Washer	2
10	00-479567	Plunger - Narrow	1
11	00-479568	Plunger - Wide	1
12	00-915825	Insert - Tube	1
13	00-915828	Shaft Assy.	1
14	00-478889	Spring	1
15	00-478890	Ball	1
16	00-478865	Bushing	1
17	00-478841	Pin - Bayonet	1
18	00-478883	Handle	1
19	00-477254	Screw - Handle	1
20	00-915849	Tube Assy. (Incls. Items 1 thru 19)	1

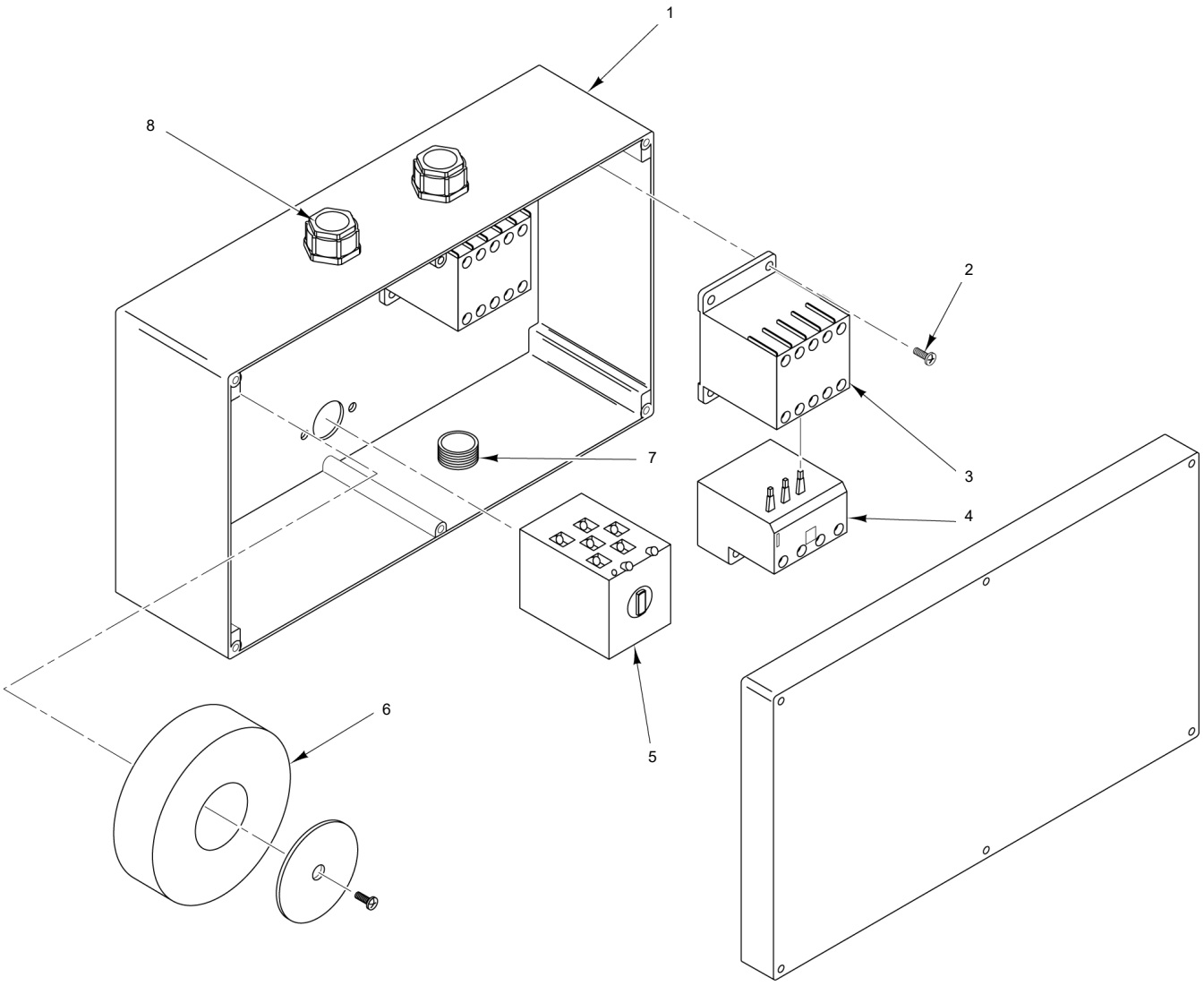

9	00-915797	Harness - Wiring
10	00-915811	Harness - Wiring
11	00-479038	Harness - Motor Switch
12	00-478852	Harness - Interlock

PARTS NOT ILLUSTRATED

PL-61093

ELECTRICAL BOX ASSEMBLY

ELECTRICAL BOX ASSEMBLY

ILLUS. PL-61093	PART NO.	NAME OF PART	AMT.
1	00-478899	Box - Electrical (With Lid)	1
2	SC-118-28	Mach. Screw M4 x 0.7 x 12mm Slotted Pan Hd. (SST)	4
3	00-915821	Contactor	2
4	00-915822	Relay - Overload	1
5	00-479035	Switch - Speed Assy. (Incls. Hardware)	1
6	00-478907	Transformer (208-240 V.)	1
7	00-478894	Seal - Cable	1
8	00-478893	Seal - Cable	2
9	01-650206	Kit, Harness W/Hardware	1
10	01-650195	KIT, HARNESS CONVERSION (Before SN 761056009)	1
10	00-939168	Harness - Wiring (Starting SN 761056009)	1
11	00-479038	Harness - Motor Switch	1
12	00-478852	Harness - Interlock	1

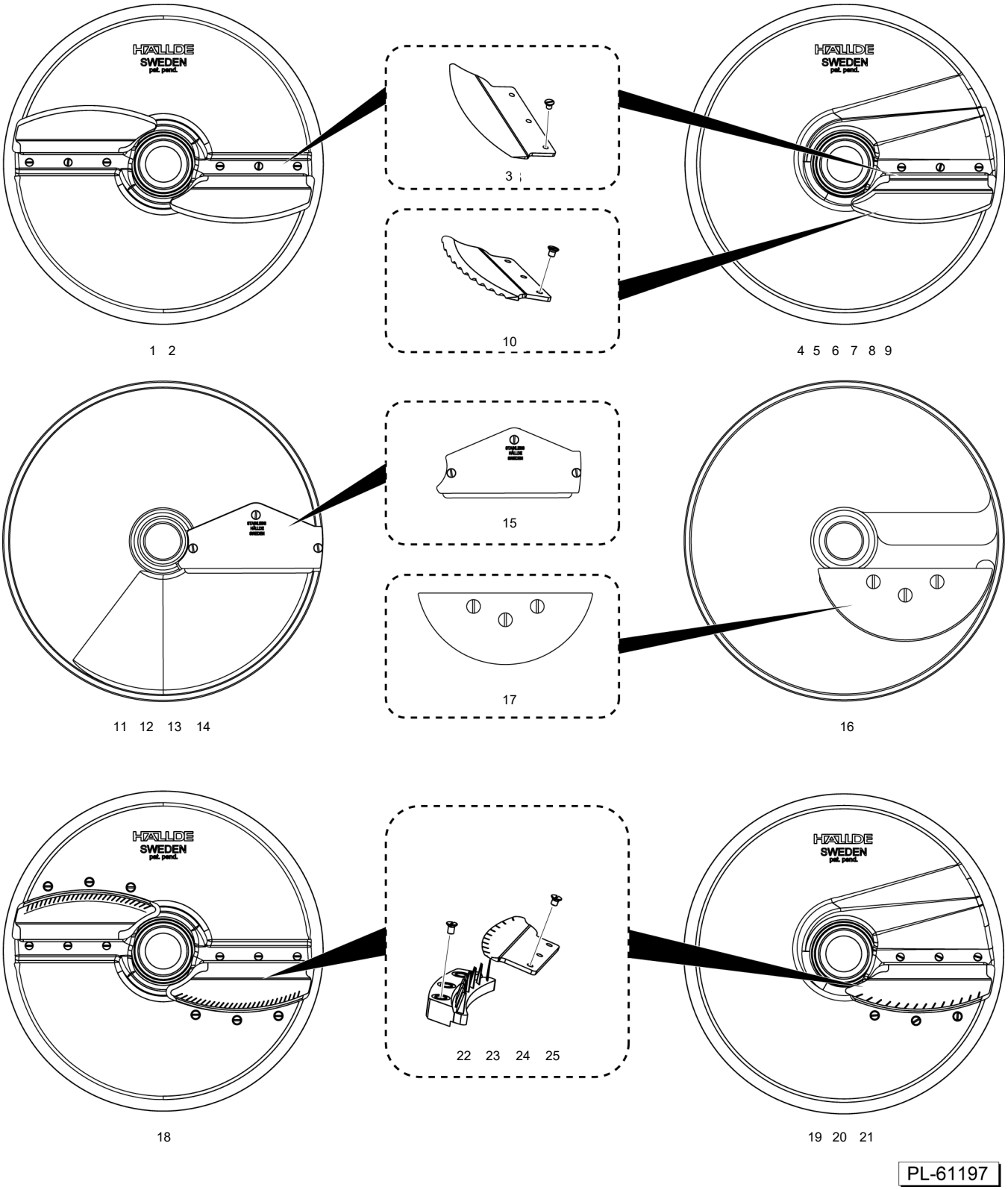

ACCESSORIES
(SLICER / JULIENNE)

ACCESSORIES
(SLICER / JULIENNE)

ILLUS. PL-61197	PART NO.	NAME OF PART	AMT.
1	00-915571	Plate - Fine Slicer 1/32 In. (1mm) (Incls. Item 3)	1
2	00-915570	Plate - Fine Slicer 1/16 In. (1.5mm) (Incls. Item 3)	1
3	00-915636	Knife - Slicer	AR
4	00-915572	Plate - Fine Slicer 1/8 In. (3mm) (Incls. Item 3)	1
5	00-915575	Plate - Slicer 5/32 In. (4mm) (Incls. Item 3)	1
6	00-915576	Plate - Slicer 7/32 In. (6mm) (Incls. Item 3)	1
7	00-915775	Plate - Slicer 5/16 In. (8mm) (Incls. Item 3)	1
8	00-915573	Plate - Slicer 3/8 In. (10mm) (Incls. Item 3)	1
9	00-915574	Plate - Slicer 5/32 In. (4mm) (Crimping) (Incls. Item 10)	1
10	00-915637	Knife - Slicer (Crimping)	AR
11	00-914707	Plate - Soft Dicing 5/16 In. (8mm) (Incls. Item 15)	1
12	00-914708	Plate - Soft Dicing 3/8 In. (10mm) (Incls. Item 15)	1
13	00-914719	Plate - Soft Dicing 1/2 In. (12mm) (Incls. Item 15)	1
14	00-914713	Plate - Soft Dicing 5/8 In. (15mm) (Incls. Item 15)	1
15	00-914791	Knife - Soft Dicing	AR
16	00-915732	Plate - Fine Cut Slicer 9/16 In. (14mm) (Incls. Item 17)	1
17	00-439158	Knife - Fine Slicer	AR
18	00-915559	Plate - Julienne 5/64 In. (2mm) (Incls. Item 22)	1
19	00-915558	Plate - Julienne 5/32 In. (4mm) (Incls. Item 23)	1
20	00-915560	Plate - Julienne 7/32 In. (6mm) (Incls. Item 24)	1
21	00-915557	Plate - Julienne 3/8 In. (10mm) (Incls. Item 25)	1
22	00-915639	Kit - Julienne 2 x 2mm	AR
23	00-915640	Kit - Julienne 4 x 4mm	AR
24	00-915641	Kit - Julienne 6 x 6mm	AR
25	00-915638	Kit - Julienne 10 x 10mm	AR

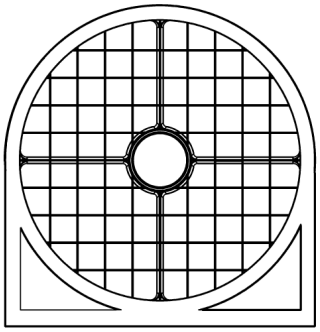

1 2 3 4 5 6
7 8 9 10 11

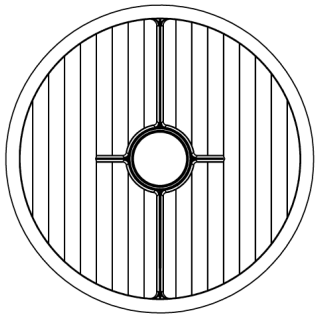

12

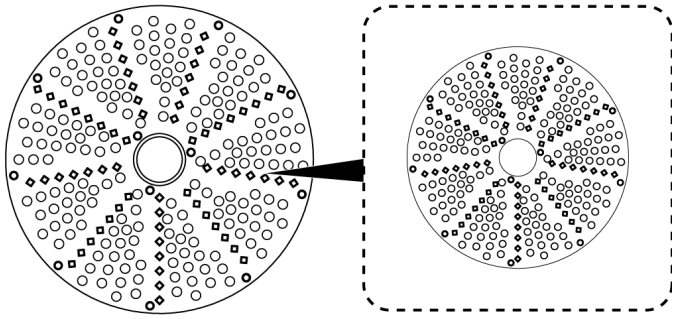

13 14

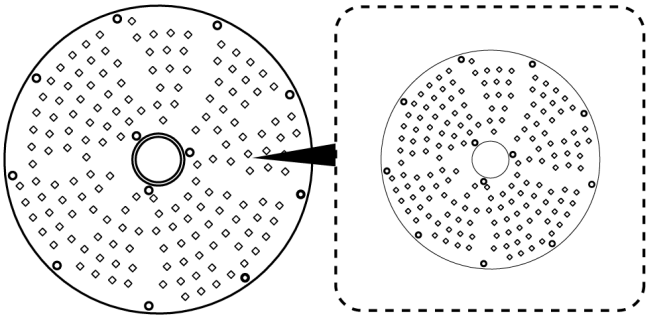

15 16

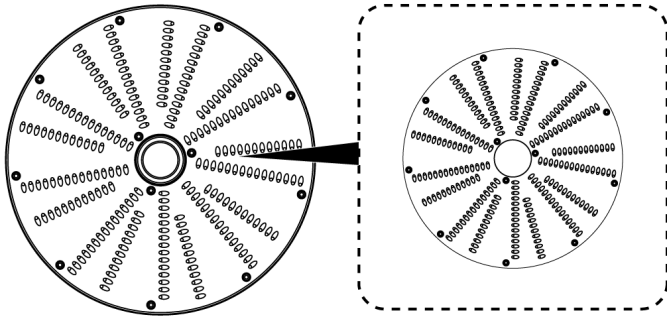

17 18 19 20

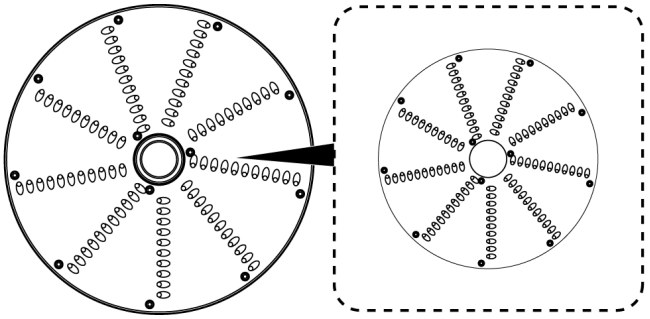

21 22 23 24 25 26 27 28 29 30

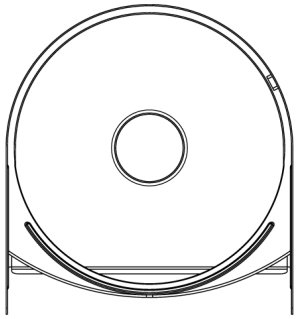

31

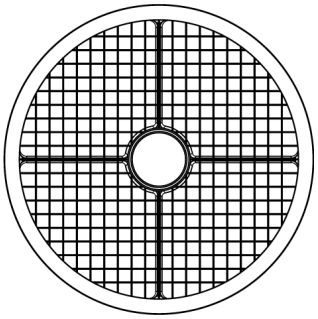

32 33 34 35 36 37
38 39 40 41 42

PL-61101

ACCESSORIES
(SHREDDER / GRATER / DICER)

ACCESSORIES
(SHREDDER / GRATER / DICER)

ILLUS. PL-61101	PART NO.	NAME OF PART	AMT.
*1	00-915873	Plate - Dicer 7/32 In. (6mm) (Must Order Items 31 & 37)	1
*2	00-915874	Plate - Dicer 5/16 In. (8mm) (Must Order Items 31 & 32)	1
*3	00-915875	Plate - Dicer 3/8 In. (10mm) (Must Order Items 31 & 33)	1
*4	00-915876	Plate - Dicer 1/2 In. (12mm) (Must Order Items 31 & 34)	1
*5	00-915877	Plate - Dicer Low 1/2 In. (12mm) (Must Order Items 31 & 41)	1
*6	00-915878	Plate - Dicer 5/8 In. (15mm) (Must Order Items 31 & 35)	1
*7	00-915879	Plate - Dicer Low 5/8 In. (15mm) (Must Order Items 31 & 42)	1
*8	00-915880	Plate - Dicer 3/4 In. (20mm) (Must Order Items 31 & 36)	1
*9	00-915881	Plate - Dicer Low 3/4 In. (20mm) (Must Order Items 31 & 39)	1
*10	00-915882	Plate - Dicer 1 In. (25mm) (Must Order Items 31 & 38)	1
*11	00-915883	Plate - Dicer Low 1 In. (25mm) (Must Order Items 31 & 40)	1
12	00-915748	Plate - French Fry Grid 3/8 In. (10mm)	1
13	00-915556	Plate - Fine Grater 1/16 In. (1.5mm)	1
14	00-915555	Plate - Cheese Grater	1
15	00-439143	Insert - Fine Grater	AR
16	00-915733	Insert - Hard Cheese	AR
17	00-915563	Plate - Shredder 1/16 In. (1.5mm)	1
18	00-915568	Plate - Shredder 5/64 In. (2mm)	1
19	00-439145	Insert - Shredder Plate 1/16 In. (1.5mm)	AR
20	00-439146	Insert - Shredder Plate 5/64 In. (2mm)	AR
21	00-915564	Plate - Shredder 1/8 In. (3mm)	1
22	00-915567	Plate - Shredder 5/32 In. (4.5mm)	1
23	00-915569	Plate - Shredder 7/32 In. (6mm)	1
24	00-915566	Plate - Shredder 5/16 In. (8mm)	1
25	00-915565	Plate - Shredder 3/8 In. (10mm)	1
26	00-439147	Insert - Shredder Plate 1/8 In. (3mm)	AR
27	00-439148	Insert - Shredder Plate 5/32 In. (4.5mm)	AR
28	00-439149	Insert - Shredder Plate 7/32 In. (6mm)	AR
29	00-439150	Insert - Shredder Plate 5/16 In. (8mm)	AR
30	00-915734	Insert - Shredder Plate 3/8 In. (10mm)	AR
31	00-938558	Grid - Dicing	1
32	00-915746-00001	Plate - Dicer 9/32 In. (7.5 mm)	1
33	00-915746-00002	Plate - Dicer 3/8 In. (10 mm)	1
34	00-915746-00003	Plate - Dicer 1/2 In. (12 mm)	1
35	00-915746-00004	Plate - Dicer 5/8 In. (15 mm)	1
36	00-915746-00005	Plate - Dicer 3/4 In. (20 mm)	1
37	00-915746-00006	Plate - Dicer 7/32 In. (6 mm)	1
38	00-915746-00007	Plate - Dicer 1 In. (25 mm)	1
39	00-915744-00001	Plate - Dicer Low 3/4 In. (20 mm)	1
40	00-915744-00002	Plate - Dicer Low 1 In. (25 mm)	1
41	00-915744-00003	Plate - Dicer Low 1/2 In. (12 mm)	1
42	00-915744-00004	Plate - Dicer Low 5/8 In. (15 mm)	1

* No Longer Available

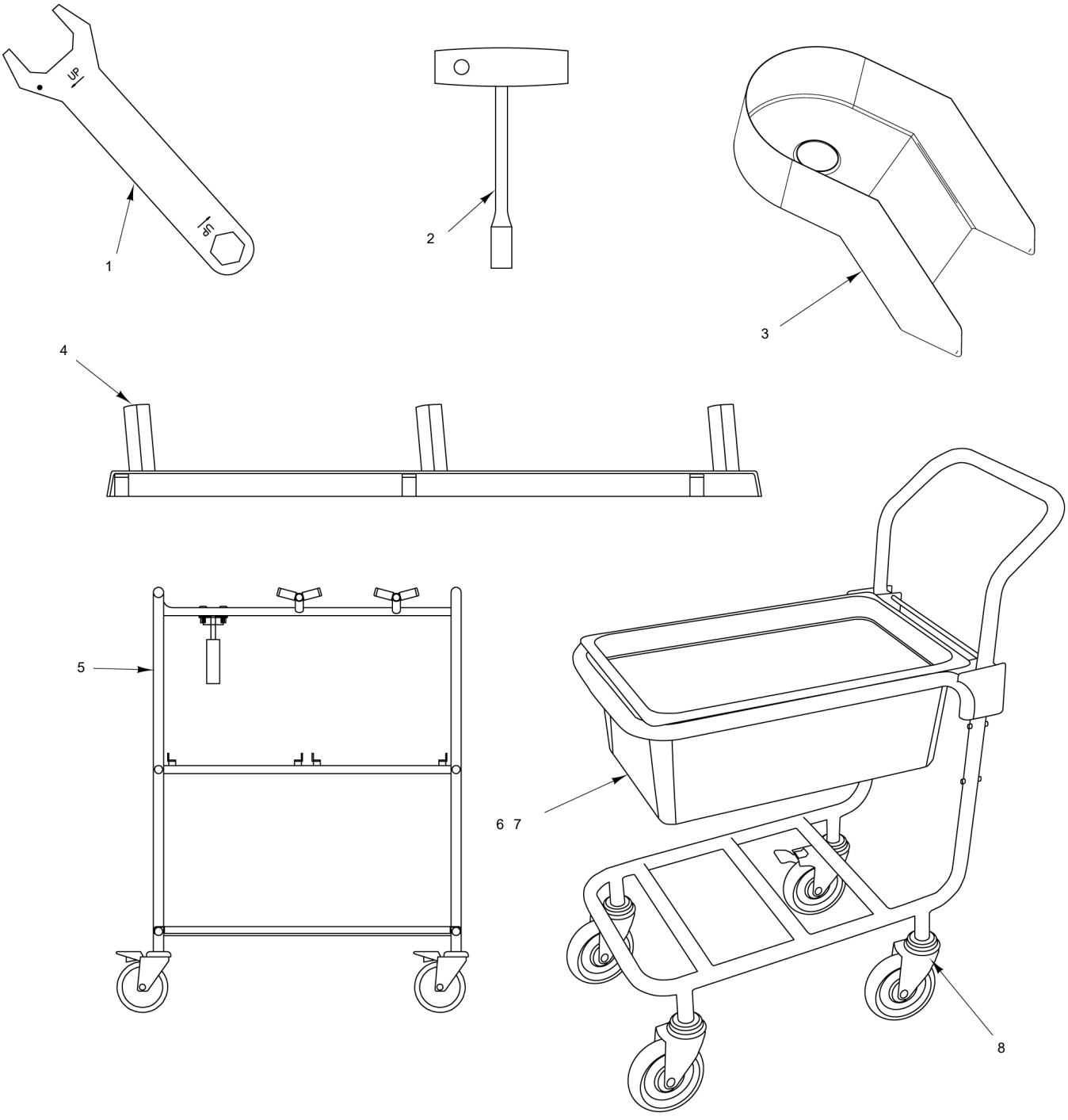

9	00-915561	Rack - Wall (Incls. 3 Plates)
10	00-915884	Rack - Wall (2) (Incls. 6 Plates)

PARTS NOT ILLUSTRATED

PL-61206

ACCESSORIES (MISC.)

ACCESSORIES (MISC.)

ILLUS. PL-61206	PART NO.	NAME OF PART	AMT.
1	00-439923	Wrench - Center Screw	1
2	00-479094	Tool	1
3	00-915885	Tray (SST)	1
4	00-914839	Rack - Wall	1
5	00-479177	Cart - Accessory (SST)	1
6	00-479175-00001	Pan (SST)	1
7	00-479175-00002	Pan (Clear)	1
8	00-479180	Cart - Product	1
*9	00-915561	Rack - Wall (Incls. 3 Plates)	1
**10	00-915884	Rack - Wall (2) (Incls. 6 Plates)	1

* Incls. 00-971170, 00-915575, 00-915566, and 00-914839.
** Incls. 00-971170, 00-915575, 00-915576, 00-915573, 00-915566, 00-915875, and 00-914839 (2).