INSTRUCTIONS

MODEL FP400 FOOD PROCESSOR

ML-104751

HOBART
CORPORATION
701 S. RIDGE AVENUE
TROY, OHIO 45374-0001

FORM 33966 Rev. A (11-98)

TABLE OF CONTENTS

MODEL FP400 FOOD PROCESSOR 3

GENERAL 4

INSTALLATION 4

- Unpacking 4
- Location 4
- Leveling 4
- Electrical Connection 4
- Verify Correct Location 5
- Start-Up Testing 5

OPERATION 6

- Controls 6
- Installing the Cutting Tools 7
- Removing the Cutting Tools 8
- Installing and Removing the Feed Cylinder 8
- Installing and Removing the Feed Attachments 9
- Using the Food Processor 11
- Cutting Tool Guide 11
- Cleaning 13

MAINTENANCE 14

- Replacement Dicing Grids 14
- Service 14

TROUBLESHOOTING 15



MODEL FP400 FOOD PROCESSOR
(Shown with Feed Hopper Attachment)

© HOBART CORPORATION, 1998

Installation, Operation and Care of HOBART MODEL FP400 FOOD PROCESSOR

PLEASE KEEP THIS MANUAL FOR FUTURE USE

GENERAL

The FP400 Food Processor is used for slicing, shredding, grating, Julienne cutting and dicing vegetables, fruits, or cheese. A wall rack, and a wide range of slicer, shredder, and dicing plates are available accessories.

The machine is built for 208-240 volt, 60 Hertz, 3 phase electrical supply.

INSTALLATION

Before installing, verify that the electrical service agrees with the specifications on the data plate located on the back of the machine.

UNPACKING

Immediately after unpacking the FP400, check for possible shipping damage. If the food processor is found to be damaged, save the packaging material and contact the carrier within 15 days of delivery.

LOCATION

Place the FP400 in its installation location. Allow adequate space to sides and rear to swing pusher plate feed attachment and open feed cylinder.

LEVELING

Turn the adjustable feet to level the machine side-to-side and front-to-back.

ELECTRICAL CONNECTION

WARNING: THE ELECTRICAL CORD HAS A FOUR-PRONGED GROUNDING PLUG WHICH MUST BE CONNECTED TO A PROPERLY GROUNDED RECEPTACLE. IF THE RECEPTACLE IS NOT THE PROPER GROUNDING TYPE, CONTACT AN ELECTRICIAN. DO NOT REMOVE THE GROUNDING PRONG FROM THE PLUG.

VERIFY CORRECT ROTATION

Verify correct rotation of the knife shaft. Make sure it moves in a clockwise direction looking down into the feed cylinder. If the rotation is incorrect, UNPLUG THE ELECTRICAL CORD and interchange any two of the three power supply leads (non grounding wires) inside the plug. Then, verify that the rotation is correct.

START-UP TESTING

1. Check that the machine stops when the locking handle (Fig. 1) is pulled forward, unlocking the feed cylinder.

2. Check that the machine stops when the locking knob for the feed hopper attachment (Fig. 1) is turned clockwise to the unlocked position, and that the machine restarts when the locking knob is turned counterclockwise to the locked position.

3. Check that the machine stops when the pusher plate feed attachment (Fig. 2) is swung to the side so that the feed cylinder (Fig. 2) opening is larger than 1¼" (31.75 mm), and that the machine restarts when the pusher plate feed attachment is swung back over the feed cylinder.

If the machine does not perform correctly, call your local Hobart Service Office before using the machine.

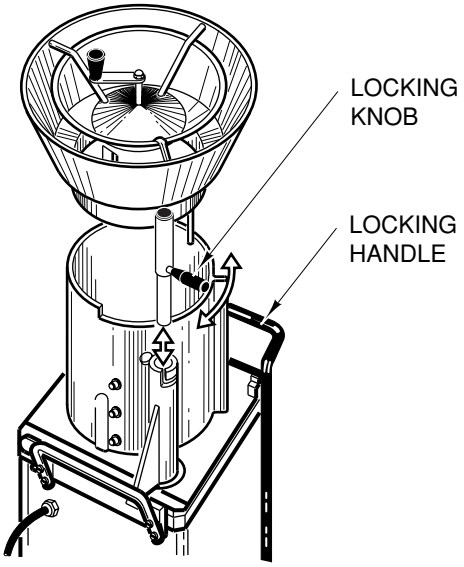

PL-52964

Fig. 1

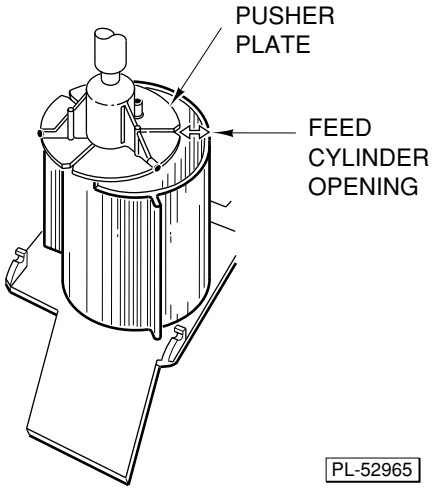

PL-52965

Fig. 2

OPERATION

WARNING: ROTATING KNIVES INSIDE. ALWAYS USE THE FEED HOPPER OR PUSHER PLATE FEED ATTACHMENT. KEEP HANDS OUT.

Proper assembly of the FP400, including selection of the appropriate cutters, is necessary for correct operation of the food processor. Refer to the CUTTING TOOL GUIDE for sizes of cutters and refer to the appropriate operation instructions.

CONTROLS (Fig. 3)

START BUTTON (Green) — Push to start.

STOP BUTTON (Red) — Push to stop.

SPEED CONTROL SWITCH — Use to regulate the speed of the machine. The control should be set to Position 2 (high speed) for most cutting other than dicing. Use Position 1 (low speed) for better results when dicing or when processing soft and juicy products.

LOCKING HANDLE — Machine stops when handle is pulled forward, unlocking the feed cylinder. Machine can be operated only when the handle is locking the feed cylinder into place.

Interlock switches prevent the food processor from operating when the feed cylinder is out of position, the feed hopper is not installed, or the pusher plate is not in the feed cylinder. If these features do not function as described, contact your local Hobart Service Office.

During operation, when the pusher plate is rotated clockwise out of the feed cylinder, the food processor stops for loading. To continue operation, rotate the pusher plate counterclockwise and the food processor will restart — you do not need to push the green START button unless STOP button was pressed.

When the feed hopper attachment is installed and the locking handle is locking the feed cylinder in place, the machine will operate continuously until the STOP button is pressed.

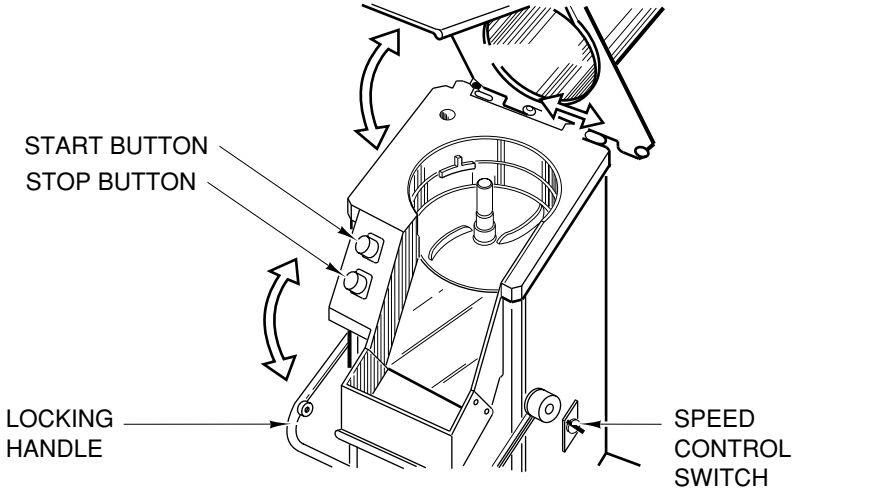

Fig. 3

INSTALLING THE CUTTING TOOLS

Always push the red STOP button before changing cutters.

Slicing, Shredding, Grating, and Julienne Cutting

1. Pull the locking handle forward and swing the feed cylinder out to the rear.

2. Place the ejector plate (Fig. 4) on the knife shaft. Press the ejector plate all the way down and turn until the plate is in the locked position.

3. Select the appropriate cutting tool for the job. Place it on the shaft, turning until engaged.

4. Screw the decoring screw (if using the pusher plate feed attachment) (left-hand thread) OR the agitator device (if using the feed hopper attachment) (left-hand thread) into position in the cutting tool center.

5. Release the catch, swing the feed cylinder back into position, and raise the locking handle.

Dicing and French Fries

1. Follow Steps 1 and 2 above.

2. When dicing, place a suitable dicing grid (see Cutting Tool Guide) in the knife chamber and turn the dicing grid clockwise as far as it will go.

   When cutting straight potato chips, place the potato chip grid in the knife chamber and turn the potato chip grid clockwise as far as it will go. For best cutting results, the direction of the potato chip grid blades and positioning of the potato should be as shown in Fig. 5.

3. Select the appropriate cutting tool. Place it on the shaft, turning until engaged.

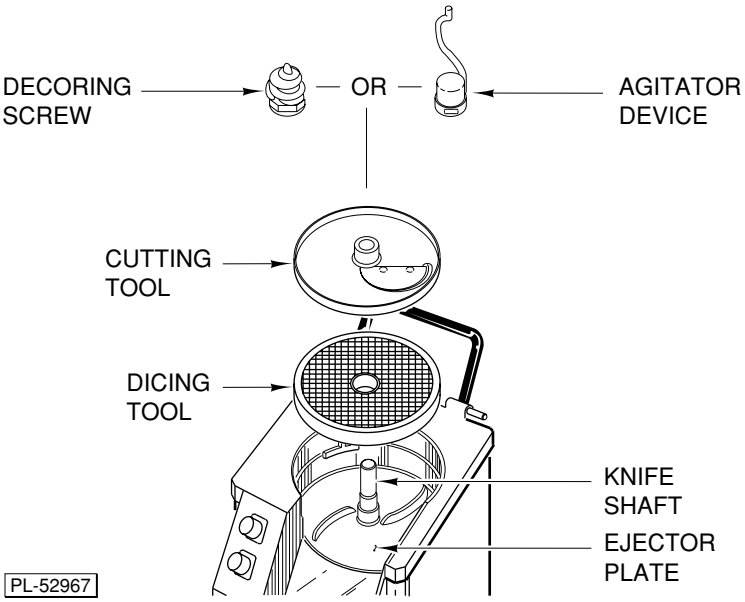

Fig. 4

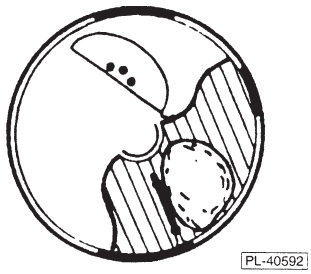

Fig. 5

4. Screw the decoring screw (if using the pusher plate feed attachment) (left-hand thread) OR the agitator device (if using the feed hopper attachment) (left-hand thread) into position in the cutting tool center.

5. Release the catch, swing the feed cylinder back into position, and raise the locking handle.

If you use the wrong combination of dicing grid and slicing tool (see Cutting Tool Guide), the following may result:

- The feed cylinder cannot be closed.
- The space between the dicing grid and the slicing tool is too large and leads to poor cutting results.

REMOVING THE CUTTING TOOLS

1. Remove the pusher plate feed attachment or the feed hopper attachment (see Installing and Removing the Feed Attachments in this manual).

2. Pull the locking handle forward and swing the feed cylinder out to the rear.

3. Using the wrench supplied, loosen the decoring screw OR the agitator device in a clockwise direction.

4. Remove the cutting tool(s) and the ejector plate.

INSTALLING AND REMOVING THE FEED CYLINDER (Fig. 6)

1. Pull the locking handle all the way open.

2. Position the feed cylinder onto the hinge pins of the machine and lower into position.

3. Close the locking handle.

4. When removing the feed cylinder, first remove the feed hopper or pusher plate attachment.

5. Pull the locking handle forward.

6. Raise and remove the feed cylinder from the hinge pins of the machine.

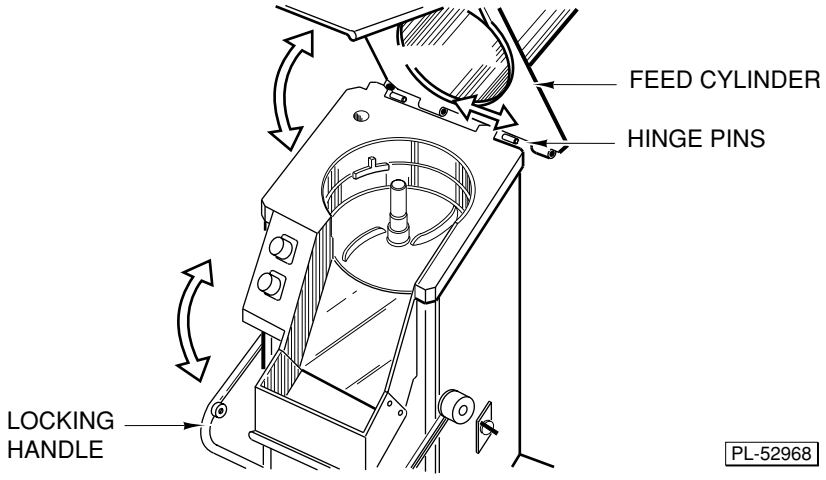

Fig. 6

INSTALLING AND REMOVING THE FEED ATTACHMENTS

The feed hopper attachment (Fig. 7) is used mainly for cutting round products up to 3" (76 mm) in diameter. The pusher plate feed attachment (Fig. 8) can be used for any type product.

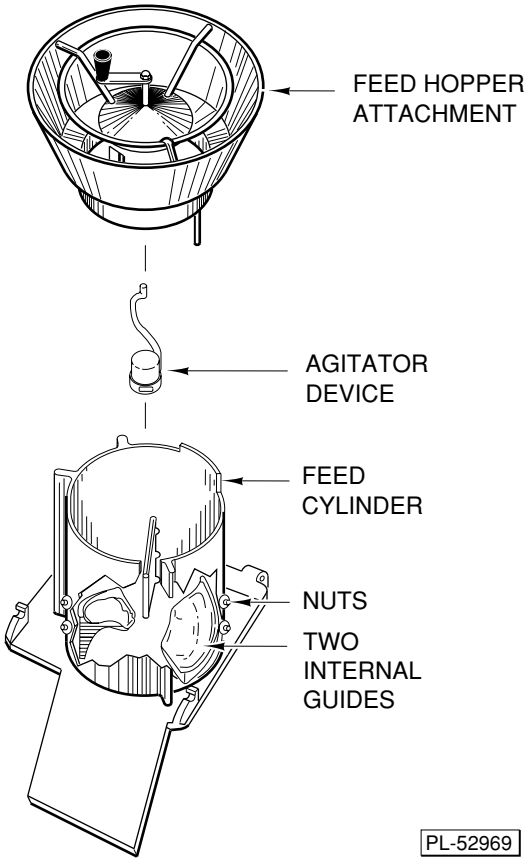

Fig. 7

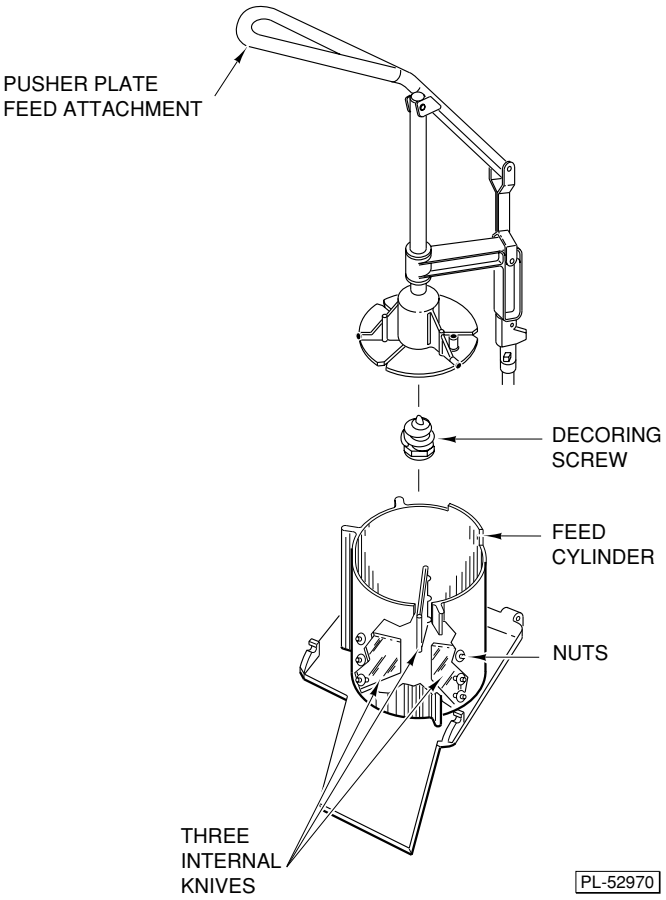

Fig. 8

Feed Hopper

(Use the agitator device to secure the plates to the knife shaft.)

1. Press the STOP button.
2. Fit the feed cylinder with two internal guides (Fig. 7).
3. Insert the locking knob and interlock rod into the opening at the left rear of the feed cylinder and place the feed hopper attachment in the center of the feed cylinder tube.
4. Press the feed hopper attachment down and turn the locking knob (Fig. 9) counterclockwise.
5. When removing, turn the locking knob clockwise and raise and remove the feed hopper attachment.

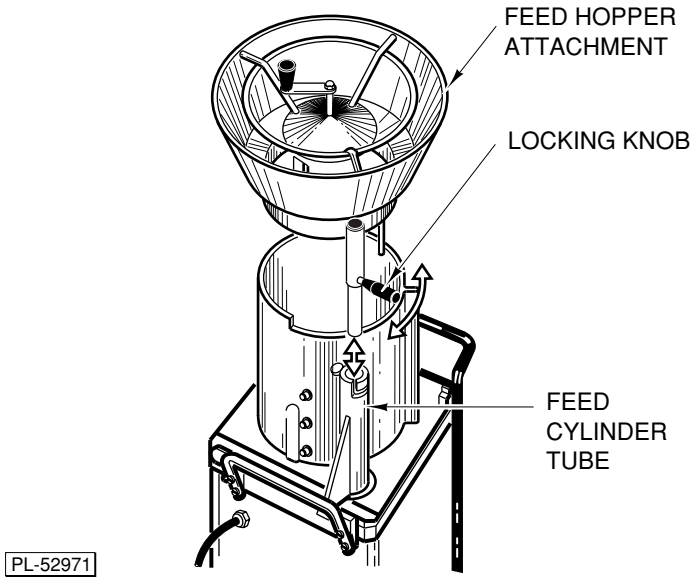

Fig. 9

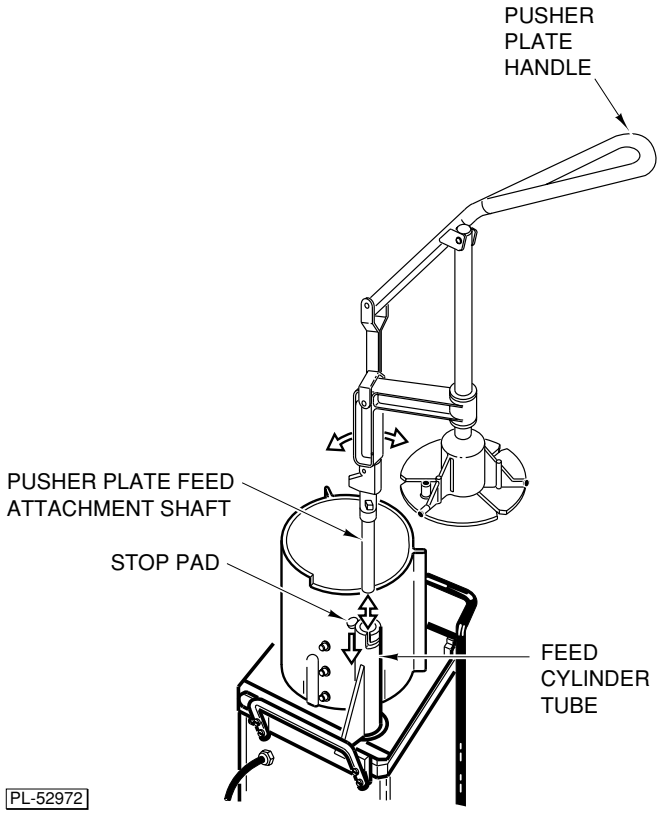

Fig. 10

Pusher Plate

(Use the decoring screw to secure the plates to the knife shaft.)

1. Press the STOP button.
2. Fit the feed cylinder with three internal knives (see Fig. 8).
3. Move the pusher plate handle (Fig. 10) all the way up.
4. Insert the pusher plate attachment shaft (Fig. 10) into the feed cylinder tube (Fig. 10).
5. Press the pusher plate attachment down and turn the locking knob counterclockwise.
6. When removing, press the stop pad (Fig. 10) down, swing the pusher plate attachment out clockwise and remove it.

USING THE FOOD PROCESSOR

When using the feed hopper attachment, bulk product may be added to the feed hopper during operation.

When using the pusher plate feed attachment, place prepared products, such as potatoes, carrots, onion, lettuce, cabbage, etc., in the feed cylinder (Fig. 11).

When cutting French fries with the Julienne cutter, place/pile the potatoes against one of the internal guides (Fig. 12). The potatoes may be stacked to cut several at one time. For consistent results, stack product against the internal guide of the feed cylinder, one pile only.

To slice round products, such as lemons and tomatoes, position the product against the partition wall of the feed cylinder (Fig. 13). For best results, it is advisable to remove tops and tails from products like lemons, limes, or onions and place them in the feed cylinder perpendicular to the desired cut.

A light pressure on the pusher plate is all that is required to give the best cutting results.

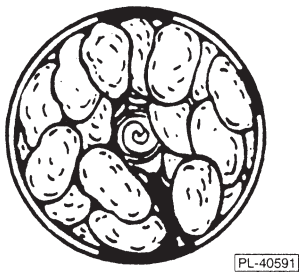

Fig. 11

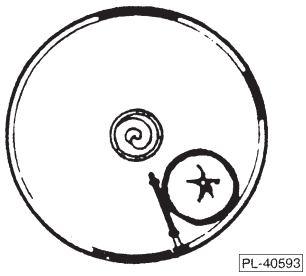

Fig. 12

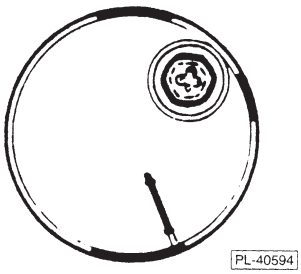

Fig. 13

CUTTING TOOL GUIDE Fractional sizes are in inches (millimeters are in parentheses).

Slicers

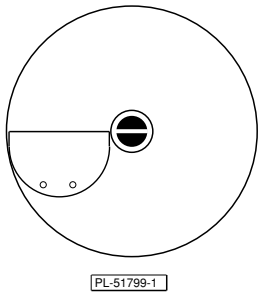

Standard Slicer	3/8 (10 mm) HD	Slices firm materials. Use with 3/8" (10 mm) Dicing Grid.

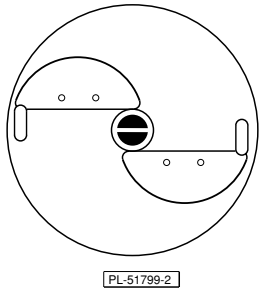

Fine Slicer	1/16 (1.5 mm)	
Fine Slicer	1/8 (3 mm)	
Fine Slicer	5/32 (4 mm)	
Fine Slicer	7/32 (6 mm)	
Fine Slicer	3/8 (10 mm)	
Fine Slicer	9/16 (14 mm)	When used with dicing grid, use only the 3/4" (19 mm) dicing grid.

Crimping Slicer

3/16 CR (4.5 mm)	Ripple cuts root vegetables (beets, potatoes, carrots, etc.)

Julienne Cutters

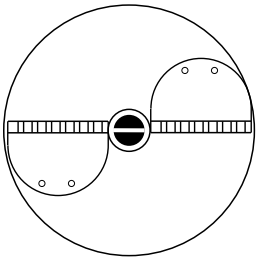
PL-51799-4

Julienne Cutter	3/32 (2.5 mm)
Julienne Cutter	3/16 (4.5 mm)
Julienne Cutter	7/32 (6 mm)
Julienne Cutter	3/8 (10 mm)

Dicer and French Fry Plates

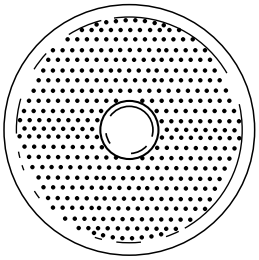
PL-51799-7

The recommended slicer plate will produce near cube-shaped products. The DICER grid dimension must be equal to or larger than the SLICER dimension.

DICER	9/32 (7.5 mm)	Use with FINE SLICER 7/32 (6 mm), 5/32 (4 mm), 1/8 (3 mm), 1/16 (1.5 mm) *
DICER	3/8 (10 mm)	Use with STANDARD SLICER 3/8 (10 mm), 7/32 (6 mm), 5/32 (4 mm), 1/8 (3 mm) *
DICER	1/2 (12.5 mm)	Use with STANDARD SLICER 3/8 (10 mm), 7/32 (6 mm), 5/32 (4 mm), 1/8 (3 mm) *
DICER	5/8 (15 mm)	Use with STANDARD SLICER 3/8 (10 mm), 7/32 (6 mm), 5/32 (4 mm), 1/8 (3 mm) *
DICER	3/4 (20 mm)	Use with FINE SLICER 9/16 (14 mm)
FRENCH FRY	3/8 (10 mm)	Use with STANDARD SLICER 3/8 (10 mm)

* Soft products may be diced with thinner slicer blades than those recommended.

Graters and Shredders

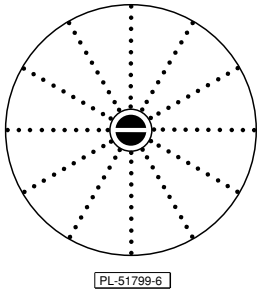
PL-51799-6

Fine Grater		Grates raw potato for potato pancakes, horseradish (sauce), dry bread, hard "Parmesan" cheese.
Shredder	1/16 (1.5 mm)	Carrots, dry bread, almonds, nuts.
Shredder	3/32 (2 mm)	Carrots, dry bread, almonds, nuts.
Shredder	1/8 (3 mm)	Carrots, dry bread, almonds, nuts.
Shredder	3/16 (4.5 mm)	Carrots, dry bread, almonds, nuts, soft pizza cheese.
Shredder	7/32 (6 mm)	Carrots, dry bread, almonds, nuts, soft pizza cheese.
Shredder	5/16 (8 mm)	Carrots, dry bread, almonds, nuts, soft pizza cheese, shreds cabbage.

CLEANING

WARNING: TURN THE MACHINE OFF AND UNPLUG THE ELECTRICAL CORD BEFORE CLEANING.

Clean the machine immediately after each use. Dismantle all removable parts from the machine and wash them in warm water and a mild detergent. Rinse thoroughly and wipe dry with a soft clean cloth. Wipe the exterior of the machine with a damp cloth.

Allowing food juices to dry on the machine may cause discoloration. NEVER clean cutting tools or other aluminum parts in highly alkaline dishwashing solutions or in excessively hot water as this can cause formation of aluminum oxide (black). DO NOT use steel wool or sharp objects for cleaning machine surfaces if they become discolored; scratched surfaces become hard to keep clean.

Do not leave the cutting blades in a wet condition when not in use.

Never clean the machine with a high pressure hose, with steam, or in a dishwasher.

Always store the cutting tools on the wall racks for safe handling and easy access.

To dismantle the machine for cleaning:

1. If the feed hopper attachment is installed, the nut (Fig. 14) securing the feed hopper agitator may be removed (left-hand thread) with the wrench provided so that the agitator can be cleaned.

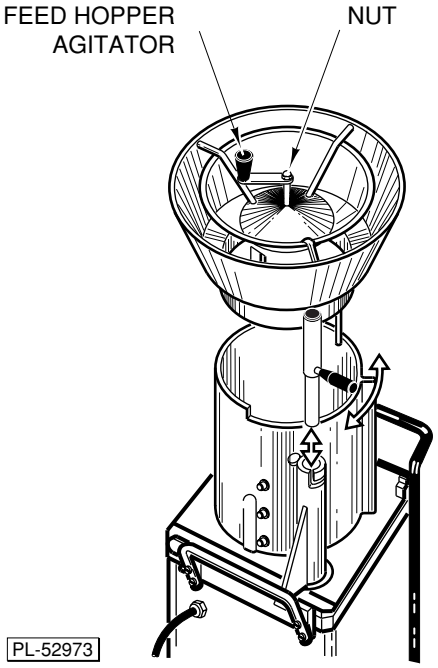

Fig. 14

If the pusher plate attachment is installed, remove it by pressing the stop pad (see Fig. 10) down, then swing the pusher plate attachment out clockwise, and pull it out of the feed cylinder tube.

Rinse all parts with lukewarm water.

2. Remove the feed cylinder. The feed cylinder guides (see Fig. 7) OR the three knives (see Fig. 8) may be removed for cleaning by unscrewing the nuts (see Fig's. 7 & 8) with the wrench provided. Rinse all parts with lukewarm water.

3. Remove the cutting tool.

4. If you have used a dicing grid, before removing, push the remaining leftovers through the TOP of the dicing grid with the nylon brush provided. Pushing the leftovers through from the underside of the dicing grid may damage the grid.

5. Remove the dicing grid and ejector plate; rinse in lukewarm water.

6. Wipe the knife chamber with a clean damp cloth. Wipe dry with a clean dry cloth.

7. Return the cutting tools to the wall rack. Lower the ejector plate onto the knife shaft. Press all the way down and turn until the plate is in the locked position.

8. Replace the feed cylinder and feed hopper or pusher plate attachment.

MAINTENANCE

WARNING: TURN THE MACHINE OFF AND UNPLUG THE ELECTRICAL CORD BEFORE DOING ANY MAINTENANCE.

Routinely inspect the machine to ensure that it is in proper working order. Plates must be clean, intact, and sharp.

The knife shaft and the hinge pins should be regularly lubricated with a drop of mineral oil, NOT COOKING OIL.

REPLACEMENT DICING GRIDS

Depending on usage, dicing grids become dull from wear with an average life expectancy from 8 to 18 months. Dicing grids cannot be resharpened and are therefore expendable. Replacement dicing grids are available from your local Hobart Service Office.

SERVICE

Contact your local Hobart Service Office for any repairs or adjustments needed on this equipment.

TROUBLESHOOTING

SYMPTOM	POSSIBLE CAUSE	SUGGESTED ACTION
Machine will not start or stops while operating and won't restart.	1. Machine plug not installed securely into receptacle.	Make sure machine is securely plugged into receptacle.
	2. Feed cylinder not locked in correct position.	Make sure feed cylinder is locked correctly.
	3. Feed hopper locking knob not in correct position.	Turn feed hopper locking knob counterclockwise to the locked position.
	4. Pusher plate feed attachment not in correct position.	Move pusher plate feed attachment to the center of the feed cylinder and lower pusher plate.
	5. Locking handle not in correct position.	Raise the locking handle to the locked position.
	6. Fuse or circuit breaker interrupting power.	Check for blown fuses or fuses with wrong amperage.
	7. Broken wire or connection.	Pull electrical cord from receptacle and call your local Hobart Service Office.
Low output or poor cutting results.	1. Wrong cutting tool used.	See Cutting Tool Guide in this manual.
	2. Wrong combination of dicing grid and slicing tool when dicing (space between the two cutting tools is too large).	See Cutting Tool Guide in this manual.
	3. Decoring screw or agitator device not installed.	Install decoring screw or agitator device to the machine.
	4. Problem with blade or grating plate.	Make sure blades or grating plates are intact and sharp.
	5. Speed control switch not in correct position.	Place speed control switch in Position 1 for dicing, and in Position 2 for all other cutting.
	6. Feeding pressure too heavy.	Provided the blades and grating plates are sharp, a light pressure is normally all that is required to give the best cutting results.
	7. Build-up under cutting tool, possibly due to ejector plate not in place or container is full.	Make sure the ejector plate is always installed when cutting.

TROUBLESHOOTING (Cont'd.)

SYMPTOM	POSSIBLE CAUSE	SUGGESTED ACTION
Cutting tool locked to shaft.	Build-up between cutting tool and dicing grid or potato chip grid.	Always use the ejector plate. Use a thick leather glove and carefully rotate cutting tool clockwise.
Decoring screw or agitator device cannot be removed.	Devices have tightened during use of the machine.	Use the wrench provided to unscrew devices (left-hand thread).