CATALOG OF REPLACEMENT PARTS



FP350 FOOD PROCESSOR

ML-104586	FP350
ML-134182	FP350C
ML-136150	FP350

A product of HOBART 701 S. RIDGE AVENUE TROY, OHIO 45374-0001

FORM 19468 Rev. H (February 2025)

 © HOBART 2025

Table of Contents

5 FEED HOPPER
7 PUSH FEED HANDLE UNIT(ML-104586 & ML-134182)
9 PUSH FEED HANDLE UNIT (ML-136150)
11 HOUSING UNIT
13 MOTOR AND BASE UNIT
15 ACCESSORIES
19 ACCESSORIES
21 SHAFT BRACKET ASSEMBLY

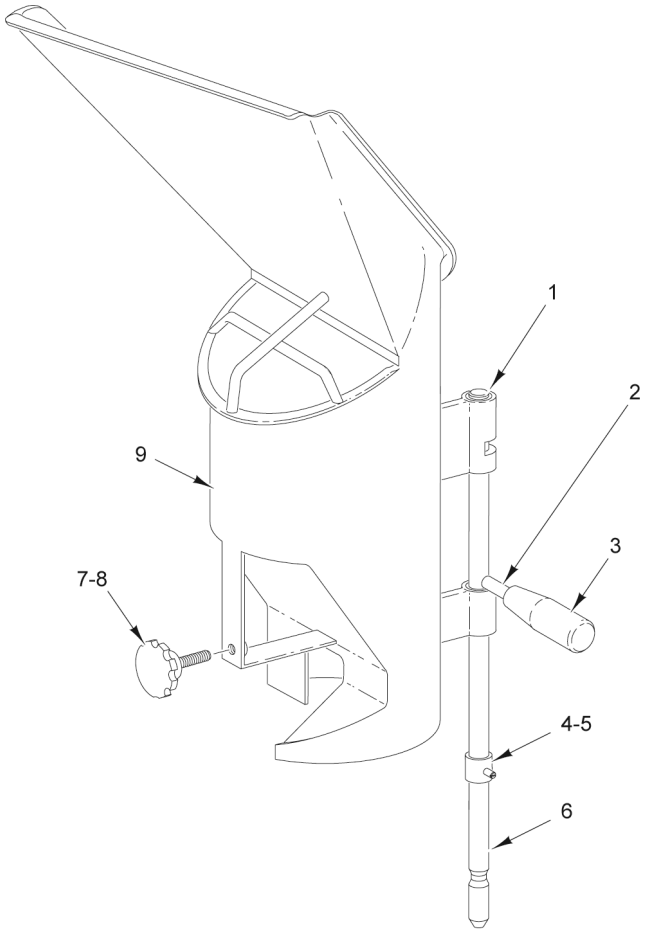

PL-52187

FEED HOPPER

FEED HOPPER

ILLUS. PL-52187	PART NO.	NAME OF PART	AMT.
1	00-477260	Bushing - Shaft	2
2	00-477254	Screw - Handle	1
3	00-478883	Knob - Handle	1
4	00-274323	Pin	1
5	00-477261	Stop - Shaft	1
6	00-477257	Shaft - Hopper	1
7	00-477256	Knob - Lobe	1
8	00-477262	Screw - Lobe Knob	1
9	00-477258	Feed Hopper (Incls. Items 1 thru 8)	1

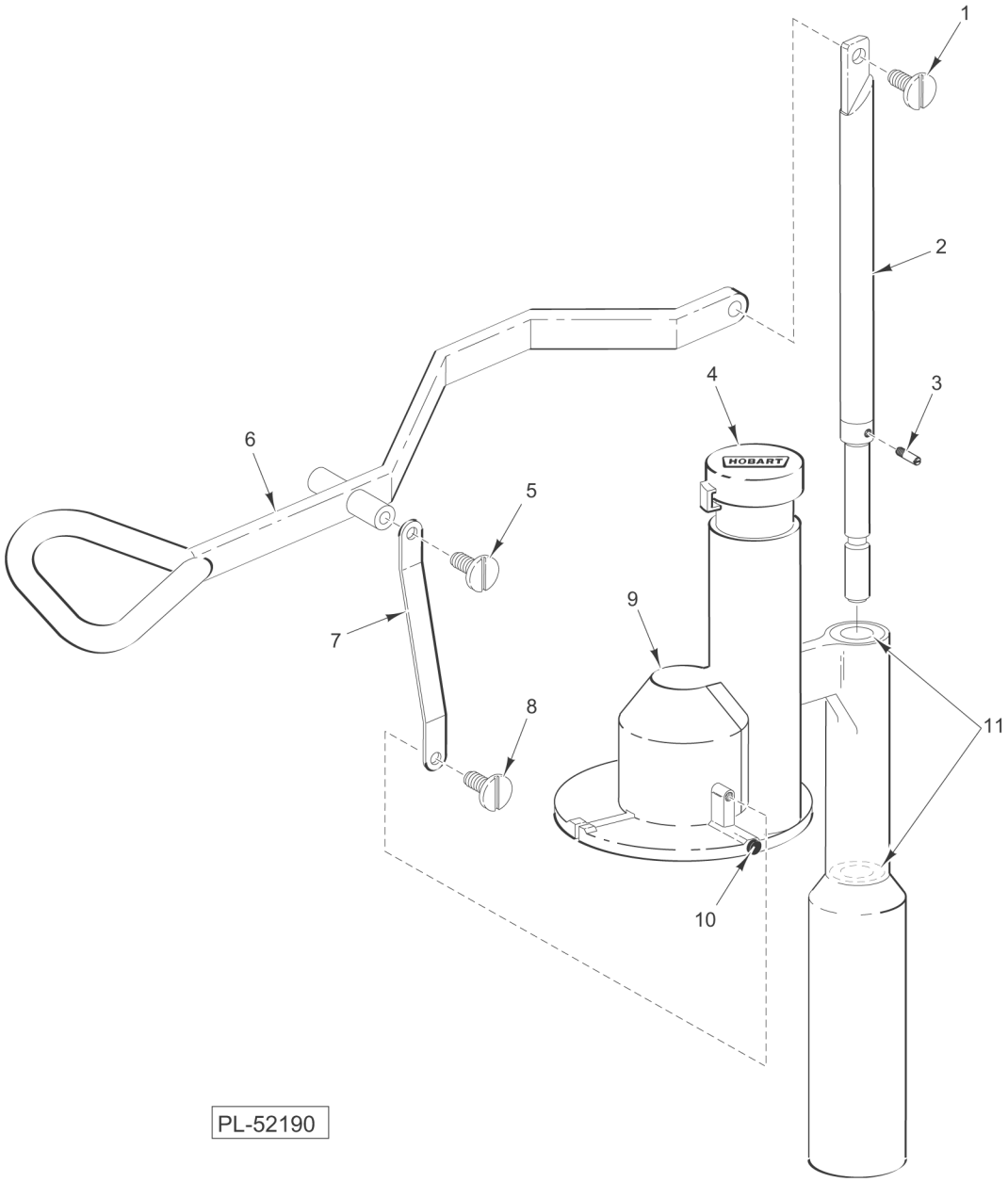

PUSH FEED HANDLE UNIT(ML-104586 & ML-134182)

PUSH FEED HANDLE UNIT(ML-104586 & ML-134182)

ILLUS. PL-52190	PART NO.	NAME OF PART	AMT.
1	00-439904	Screw - Shaft	1
2	00-439905	Shaft - Pusher	1
3	00-274323	Pin	1
4	00-439118	Plunger	1
5	00-439906	Screw - Pusher Plate	2
6	00-439910	Handle - Pusher Plate	1
7	00-439907	Link - Pusher Plate	2
8	00-439906	Screw - Pusher Plate	2
9	00-439909	Plate - Pusher	1
10	00-439908	Rivet (Plastic)	3
11	00-439911	Bushing 20.4/25 x 15	2

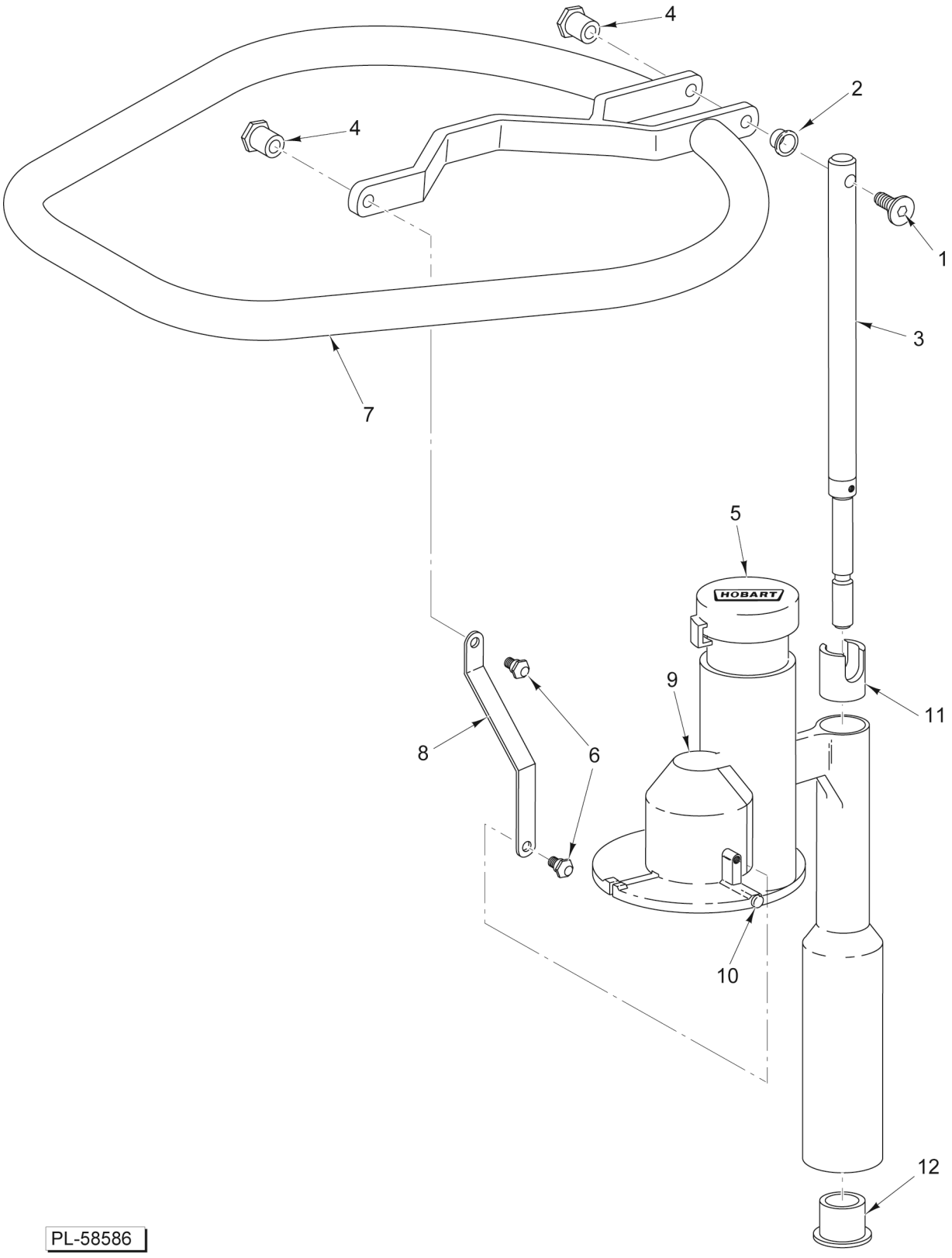

PUSH FEED HANDLE UNIT (ML-136150)

PUSH FEED HANDLE UNIT (ML-136150)

ILLUS. PL-58586	PART NO.	NAME OF PART	AMT.
1	00-914721	Screw - Shaft	1
2	00-914727	Bushing	2
3	00-914726	Shaft - Pusher	3
4	00-914729	Nut (12.5)	1
5	00-439118	Plunger	1
6	00-914725	Screw - Pusher Plate	2
7	00-914732	Handle - Pusher Plate	1
8	00-914730	Link - Pusher Plate	2
9	00-914731	Plate - Pusher	1
10	00-478905	Knob - Slide	3
11	00-914733	Bushing	1
12	00-938736	Bushing (25x13)	1

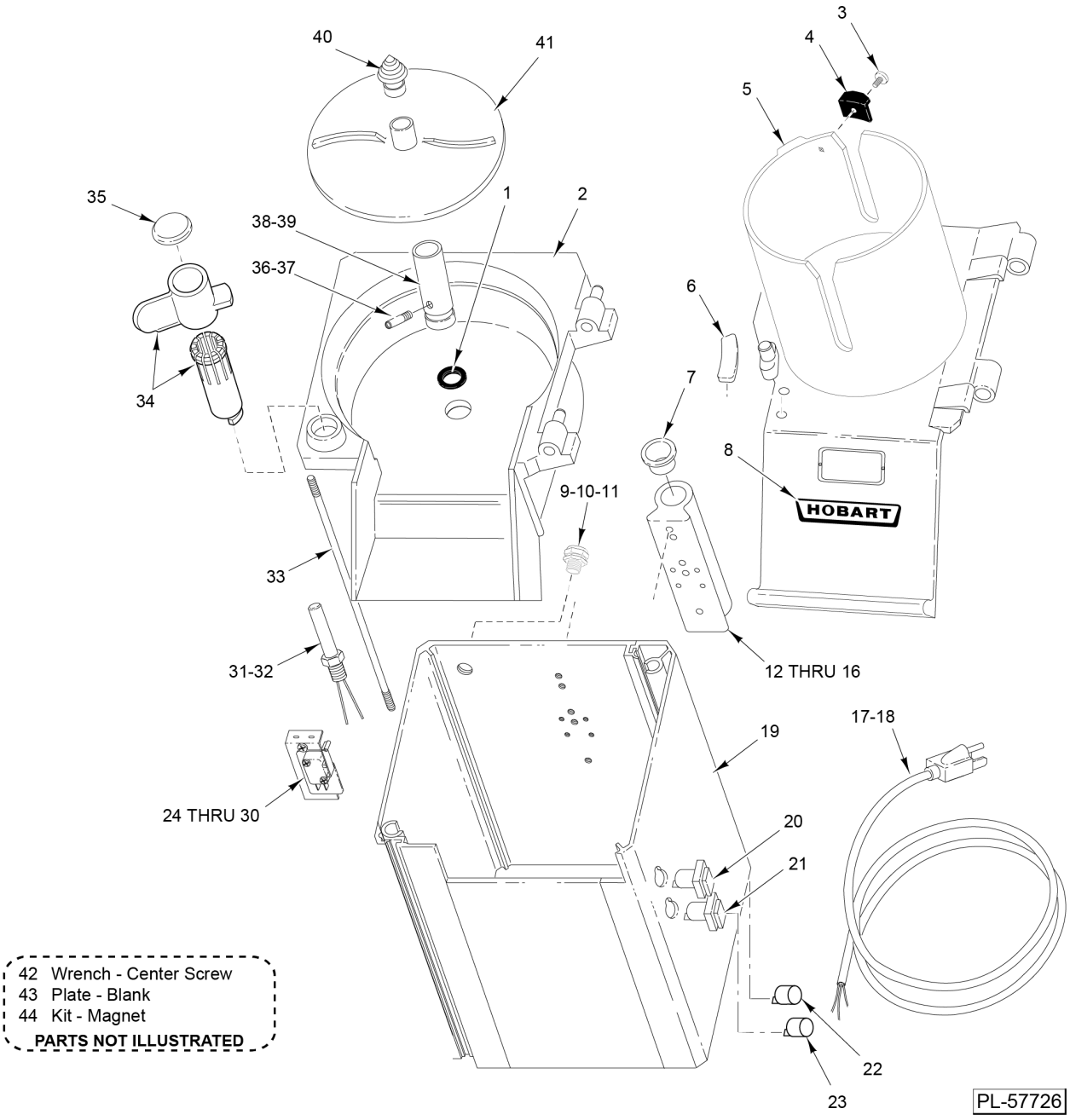

HOUSING UNIT

HOUSING UNIT

ILLUS. PL-57726	PART NO.	NAME OF PART	AMT.
1	00-439129	Seal - Washer	1
2	00-439130	Knife - Chamber	1
3	SC-123-02	Mach. Screw M4 x 0.7 x 10mm Slotted Oval Hd. (SST)	1
4	00-439903	Support - Pusher	1
5	00-439913	Feed Head Assy. (Incls. Items 3, 4, 6, & 8)	1
6	00-439119	Plate - Friction	1
7	00-439924	Bushing 16/20 x 15	2
8	00-117863-00001	Logo - Hobart	1
9	00-439168	Flange - Reducing	1
10	FE-024-37	Relief - Strain (Power Cord) (110 V.)	1
11	FE-025-35	Relief - Strain (Power Cord) (220 V.)	1
12	00-439914	Bracket - Shaft (Incls. Item 7)	1
13	00-439915	Pin - Activator (Short)	1
14	00-439918	Pin - Activator (Long)	1
15	00-439988	Spring - Compression	2
16	00-439990	O-Ring (Activator Pins)	2
17	00-274857	Cord & Plug (110/120 V.)	1
18	00-477265	Cord & Plug (220/240 V.)	1
19	00-439916	Housing Assy	1
20	00-875522	Button Assy. - Stop (120 V.)	1
21	00-875523	Button Assy. - Start (120 V.)	1
22	00-477266	Button Assy. - Stop (220/240 V.)	1
23	00-477267	Button Assy. - Start (220/240 V.)	1
24	00-439937	Bracket - Switch (Single)	1
25	00-439938	Bracket - Switch (Double)	1
26	00-439302	Plate - Insulating	1
27	SD-017-34	Self-Tapping Screw 6-20 x 5/8 Slotted Truss Hd., Type AB (SST)	AR
28	SC-122-37	Mach. Screw M4 x 0.7 x 10mm Phil. Pan Hd. (SST)	1
29	NS-200-03	Nut Hex M4 x 0.7 (SST)	1
30	00-087711-201-1	Switch - POS Action	AR
31	00-439663	Switch - Reed (110/120 V.)	1
32	00-477264	Switch - Reed PR15 (220/240 V.)	1
33	00-439131	Kit - Pull Rod	1
34	00-479616	Kit - Lock Handle	1
35	00-439912	Plug	1
*36	00-915751	Pin	1
**37	00-915777	Pin	1
*38	00-439125	Sleeve - Thrust	1
**39	00-915778	Sleeve - Thrust	1
40	00-439922	Screw - Center	1
41	00-439142	Ejector	1
42	00-439923	Wrench - Center Screw	1
43	00-290137-00017	Plate - Blank	1
44	01-650028	Kit - Magnet	1

* Before SN 761048340
** Starting SN 761048340

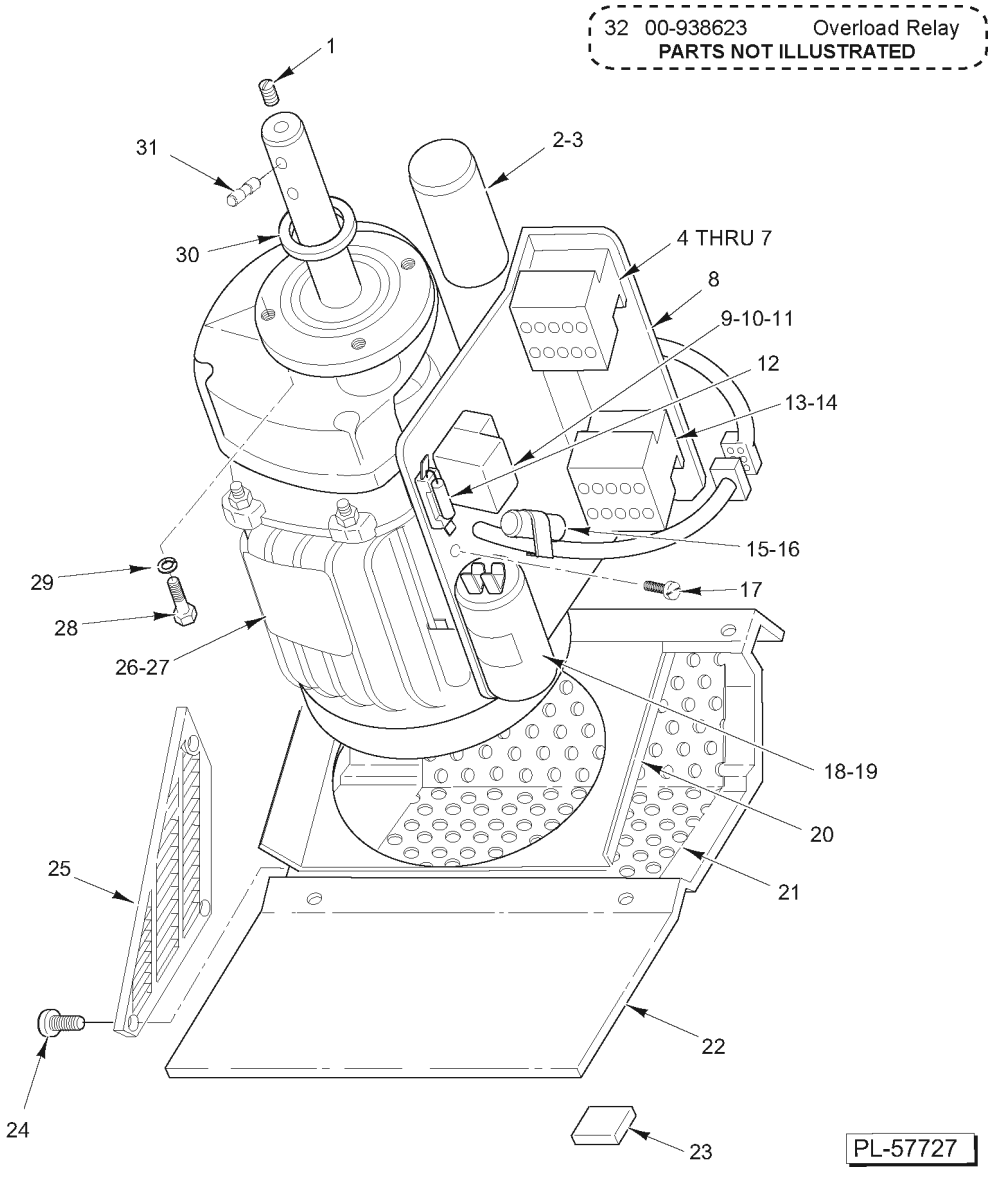

MOTOR AND BASE UNIT

MOTOR AND BASE UNIT

ILLUS. PL-57727	PART NO.	NAME OF PART	AMT.
1	SC-121-48	Set Screw M8 x 1.25 x 12mm Socket Hdls., Cup Pt. (SST)	1
2	00-439140	Capacitor - Run (80uF) (110/120 V.)	1
3	00-477277	Capacitor (80MF) (220/240 V.)	1
4	00-875529	Protector - Overload LRD16 10-13 (110/120 V.)	1
5	00-875526	Contactor (110/120 V.)	1
6	00-914116	Protector - Overload LRD16 10-13 (220/240 V.)	1
7	00-914114	Contactor (220/240 V.)	1
8	00-439139	Panel & Hardware Control	1
9	00-479591	Kit - Start Relay	1
10	00-087714-00061	Relay (110/120 V.)	1
11	00-477278	Relay - Start (230 V.)	1
12	00-439167	Resistor Assy. (Service Only) (ML-104586 & ML-134182)	2
13	00-914113	Contactor (110/120 V.)	1
14	00-087713-00100	Contactor (110/120 V.) (FP350C)	1
15	00-274344	Circuit - RC (110 V.)	1
16	00-274860	Circuit - RC (220 V.)	1
17	SC-200-20	NLA - Obsolete--Mach. Screw M5 x 0.8 x 6mm Slotted Cheese Hd	1
18	00-439137	Capacitor - Start (20uF) (110/120 V.)	1
19	00-477276	Capacitor - Start (20uF) (220/240 V.)	1
20	00-439136	Plate - Fan	1
21	00-439296	Plate - Protector	1
22	00-439921	Base	1
23	00-274353	Foot - Rubber	4
24	SD-037-40	Self-Tapping Screw 3.5mm x 9.5mm Slotted Oval Hd., Type AB (SST)	3
25	00-274351	Louver - Left & Right	1
26	00-914487	Kit - Motor (120 V.) (Incls. Item 8, Fan, Shroud, & Gear)	1
27	00-477273	Motor (220/240 V.)	1
28	SC-120-48	Cap Screw M6 x 1.0 x 18mm Hex Hd. (SST)	4
29	WL-006-17	Lockwasher 1/4 Helical (SST)	4
30	00-439133	Ring - Seal	1
31	00-439124	Pin - Carrier	1
32	00-938623	Overload Relay	1
	00-479592	Connector - Motor (220/240 V.) (Included In Item 10)	1
	00-333692	Foot - Adjustable	4
	00-477268	Fuse T100 (220/240 V.)	1
	00-477269	Holder - Fuse	1

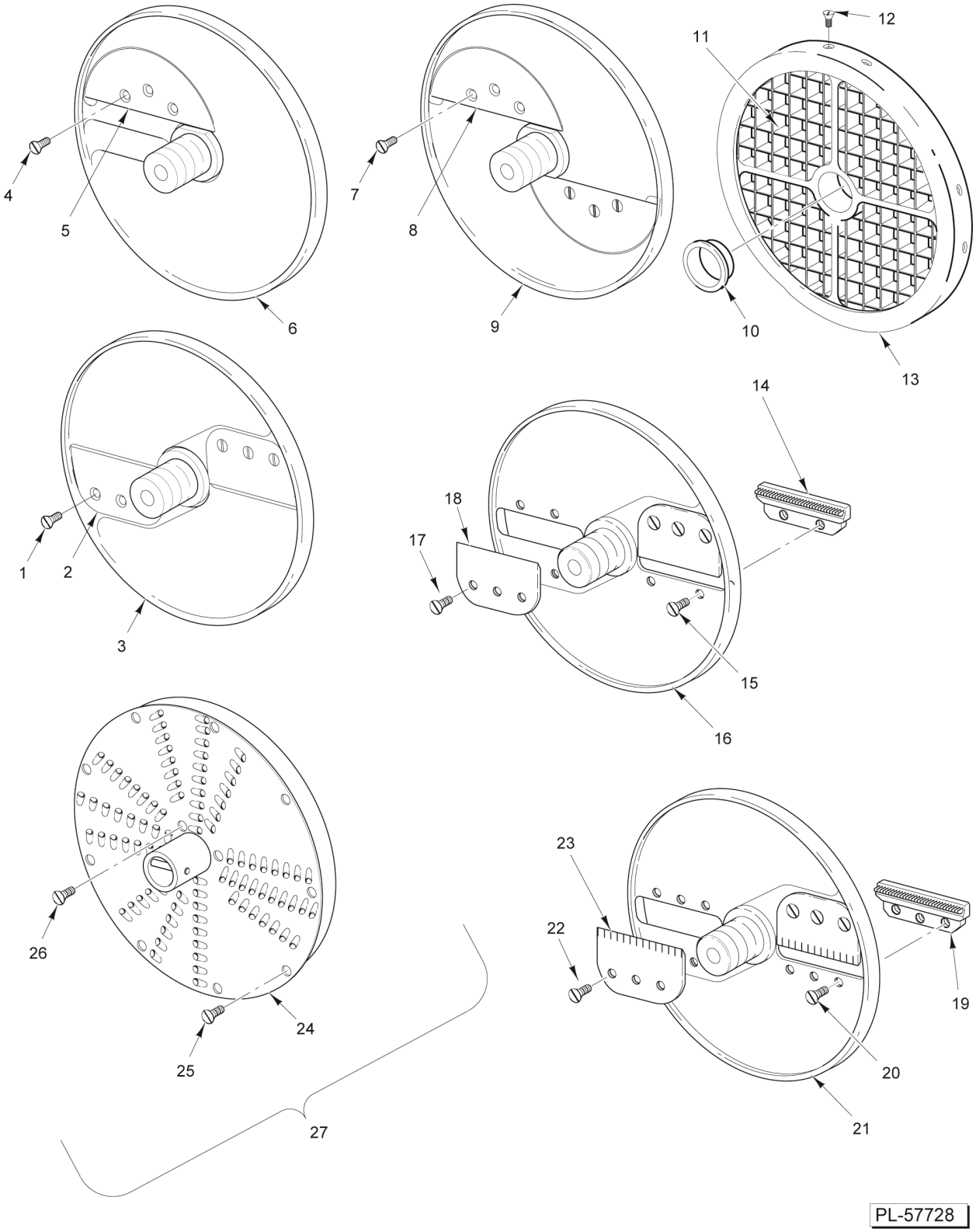

ACCESSORIES

ACCESSORIES

ILLUS. PL-57728	PART NO.	NAME OF PART	AMT.
1	SC-120-82	Mach. Screw M5 x 0.8 x 6mm Slotted Flat Hd. (SST)	6
2	00-439157	Knife - Standard Slicer	2
3	00-439298	Plate - Standard Slicer 3/8 In. (Incls. Items 1 & 2)	1
4	SC-120-82	Mach. Screw M5 x 0.8 x 6mm Slotted Flat Hd. (SST)	3
5	00-439158	Knife - Fine Slicer	1
6	00-439170	Plate - Fine Slicer 5/32 In. (Incls. Items 4 & 5)	1
	00-439171	Plate - Fine Slicer 7/32 In. (Incls. Items 4 & 5)	1
	00-439172	Plate - Fine Slicer 3/8 In. (Incls. Items 4 & 5)	1
	00-439303	Plate - Fine Slicer 9/16 In. (Incls. Items 4 & 5)	1
7	SC-120-82	Mach. Screw M5 x 0.8 x 6mm Slotted Flat Hd. (SST)	6
8	00-439158	Knife - Fine Slicer	2
9	00-439164	Plate - Fine Slicer 1/16 In. (Incls. Items 10 & 11)	1
	00-439169	Plate - Fine Slicer 1/8 In. (Incls. Items 10 & 11)	1
	00-479533	Plate - Fine Slicer 1/32 In. (Incls. Items 10 & 11)	1
10	00-875674	Ring - Center	1
11	00-477791	Kit - Knife 9/32 In	1
	00-477792	Kit - Knife 3/8 In	1
	00-477793	Kit - Knife 1/2 In	1
	00-477794	Kit - Knife 5/8 In	1
	00-477795	Kit - Knife 3/4 In	1
	00-479555	Kit - Knife 1 In	1
12	SC-121-13	Mach. Screw M4 x 0.7 x 8mm Slotted Flat Hd. (SST)	8
13	00-477786	Plate - Dicer (9/32 In.)	1
	00-477787	Plate - Dicer (3/8 In.)	1
	00-477788	Plate - Dicer (1/2 In.)	1
	00-477789	Plate - Dicer (5/8 In.)	1
	00-477790	Plate - Dicer 3/4 In	1
	00-479556	Plate - Dicer 1 In	1
14	00-439175	Knife - Balk 3/32 In	2
15	SC-120-83	Mach. Screw M4 x 0.7 x 6mm Slotted Flat Hd. (SST)	4
16	00-439174	Plate - Julienne 3/4 In. (Incls. Items 29, 30, 32, & 33)	1
17	SC-120-82	Mach. Screw M5 x 0.8 x 6mm Slotted Flat Hd. (SST)	6
18	00-439157	Knife - Standard Slicer	2
19	00-439177	Knife - Balk 3/16 In	2
	00-439179	Knife - Balk 7/32 In	2
	00-439162	Knife - Balk 3/8 In	2
20	SC-121-13	Mach. Screw M4 x 0.7 x 8mm Slotted Flat Hd. (SST)	6
21	00-439173	Plate - Crimping 3/16 In. (Not Shown) (Incls. Items 42 & 43)	1
	00-439176	Plate - Julienne 3/16 In. (Incls. Items 34, 37, 42, & 44)	1
	00-439178	Plate - Julienne 7/32 In. (Incls. Items 35, 37, 42, & 45)	1
	00-439180	Plate - Julienne 3/8 In. (Incls. Items 36, 37, 42, & 46)	1
22	SC-120-82	Mach. Screw M5 x 0.8 x 6mm Slotted Flat Hd. (SST)	6
23	00-439159	Knife - Crimping Slicer 3/16 In. (Not Shown)	2
	00-439160	Knife - Julienne 3/16 In	2
	00-439161	Knife - Julienne 7/32 In	2
	00-439163	Knife - Julienne 3/8 In	2
24	00-439143	Insert - Fine Grater	1
	00-439145	Insert - Shredder Plate 1/16 In. (1.5mm)	1
	00-439146	Insert - Shredder Plate 5/64 In. (2mm)	1
	00-439147	Insert - Shredder Plate 1/8 In. (3mm)	1
	00-439148	Insert - Shredder Plate 5/32 In. (4.5mm)	1
	00-439149	Insert - Shredder Plate 7/32 In. (6mm)	1
	00-439150	Insert - Shredder Plate 5/16 In. (8mm)	1
25	SC-120-85	Mach. Screw M3 x 0.5 x 6mm Slotted Flat Hd. (SST)	9
26	SC-120-85	Mach. Screw M3 x 0.5 x 6mm Slotted Flat Hd. (SST)	3

ACCESSORIES

ILLUS. PL-57728	PART NO.	NAME OF PART	AMT.
27	00-439144	Plate - Fine Grater (Incls. Items 47, 51, & 52)	1
	00-439151	Plate - Shredder 1/16 In. (Incls. Items 48, 54, & 55)	1
	00-439152	Plate - Shredder 3/32 In. (Incls. Items 49, 54, & 55)	1
	00-439153	Plate - Shredder 1/8 In. (Incls. Items 50, 54, & 55)	1
	00-439154	Plate - Shredder 3/16 In. (Incls. Items 51, 54, & 55)	1
	00-439155	Plate - Shredder 7/32 In. (Incls. Items 52, 54, & 55)	1
	00-439156	Plate - Shredder 5/16 In. (Incls. Items 53, 54, & 55)	1
	00-479534	Plate - Shredder 3/8 In	1
	00-938882	Plate - Shredder 3/8 In. SS (10MM) BL	1
	00-439297	Plate - French Fry 3/8 In. (Not Shown)	1
	00-274372	Wall Rack (Incls. Label)	1

NOTES

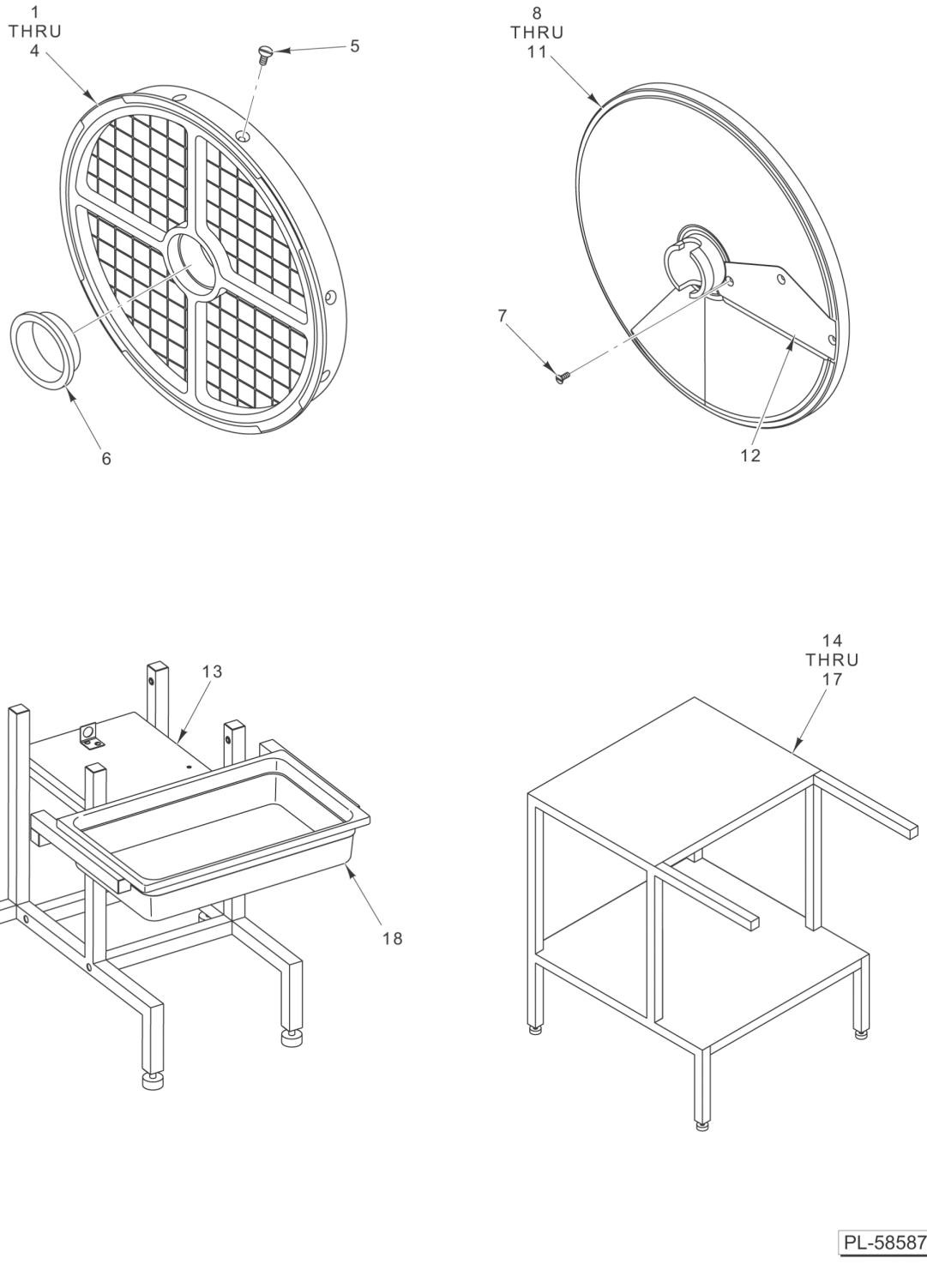

ACCESSORIES

ACCESSORIES

ILLUS. PL-58587	PART NO.	NAME OF PART	AMT.
1	00-914709	Grid - Soft Dice 3/8 In. (Set)	1
2	00-914706	Grid - Soft Dice 5/16 In. (Set)	1
3	00-914712	Grid - Soft Dice 5/8 In. (Set)	1
4	00-914715	Grid - Soft Dice 1/2 In. (Set)	1
5	SC-121-13	Mach. Screw M4 x 0.7 x 8mm Slotted Flat Hd. (SST)	8
6	00-875674	Ring - Center	1
7	00-914792	Screw M3 x 5mm (SST)	3
8	00-914707	Plate - Soft Dicing 5/16 In	1
9	00-914708	Plate - Soft Dicing 3/8 In	1
10	00-914713	Plate - Soft Dicing 5/8 In	1
11	00-914719	Plate - Soft Dicing 1/2 In	1
12	00-914791	Knife - Soft Dicing	1
13	00-914717	Table - Work	1
14	00-435091	Work Table (Incls. Items 15, 16, & 17)	1
15	00-333692	Foot - Adjustable	4
16	00-333691	Insert - Leveler	4
17	NS-017-16	Jam Nut 3/8-16 Hex	4
18	00-914790	Container - Plastic (Pan)	1

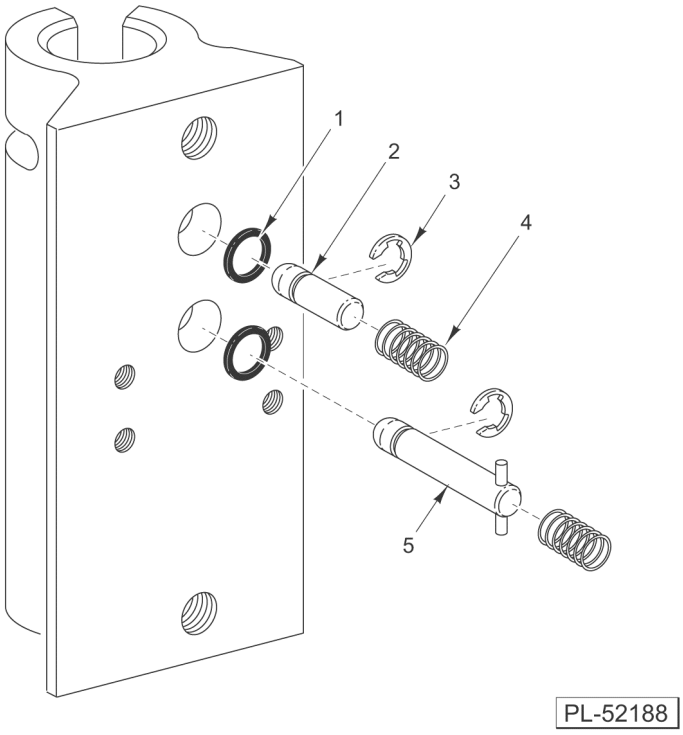

SHAFT BRACKET ASSEMBLY

SHAFT BRACKET ASSEMBLY

ILLUS. PL-52188	PART NO.	NAME OF PART	AMT.
1	00-439990	O-Ring (Activator Pins)	2
2	00-439915	Pin - Activator (Short)	1
3	RR-011-99	Retaining Ring	2
4	00-439988	Spring - Compression	2
5	00-439918	Pin - Activator (Long)	1