CATALOG OF REPLACEMENT PARTS



FP300i FOOD PROCESSOR

ML-136363

A product of HOBART 701 S. RIDGE AVENUE TROY, OHIO 45374-0001

FORM 43399 (March 2023)

 © HOBART 2023

Table of Contents

5 HOUSING UNIT
7 ELECTRICAL PANEL
9 MANUAL PUSH FEEDER
11 FEED CYLINDER
13 FEED CYLINDER AND HOPPER
15 4-TUBE INSERT ASSEMBLY
17 ACCESSORIES (SLICER / JULIENNE)
19 ACCESSORIES (SHREDDER / GRATER / DICER)

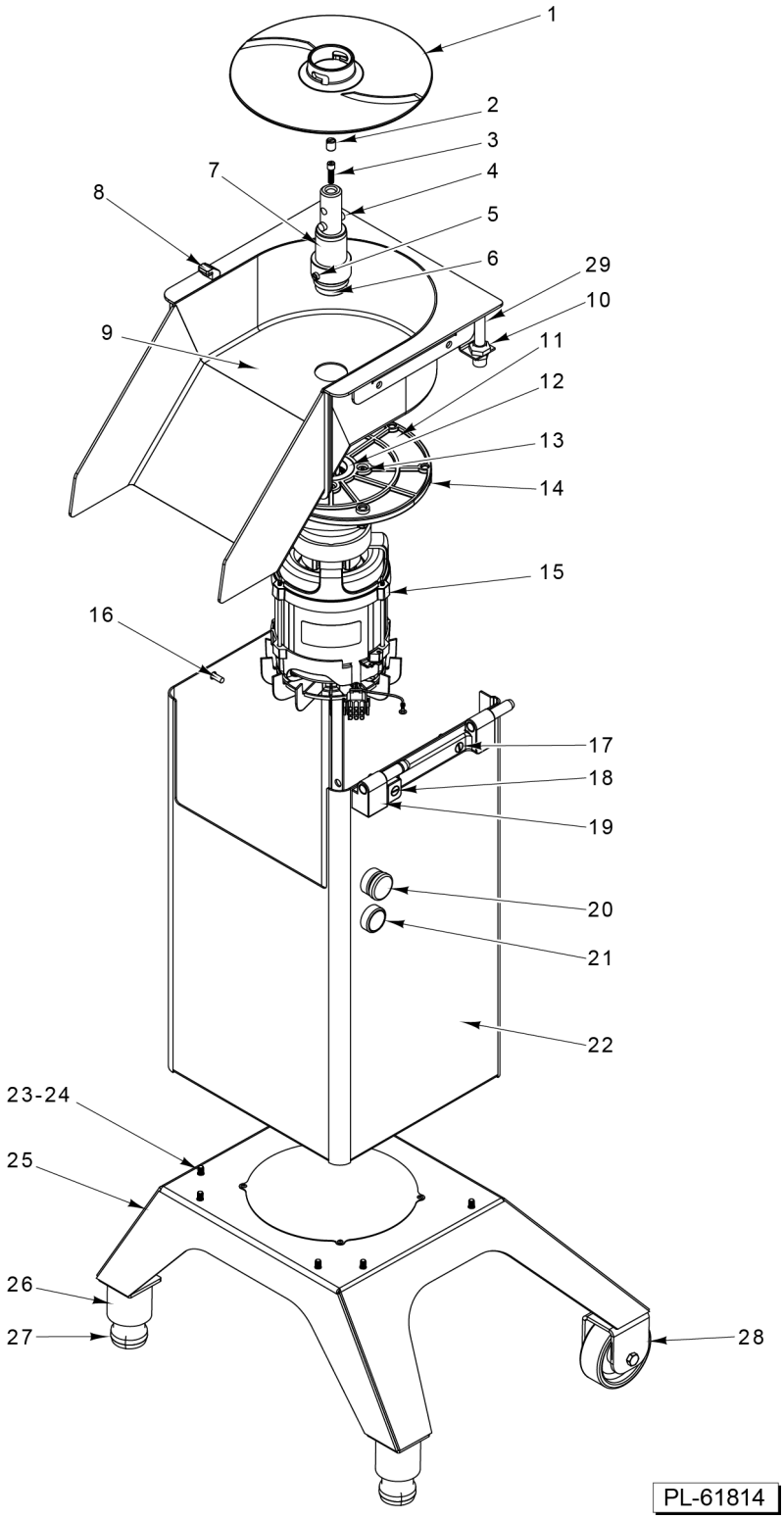

HOUSING UNIT

HOUSING UNIT

ILLUS. PL-61814	PART NO.	NAME OF PART	AMT.
1	00-915788	Plate - Ejector	1
2	00-939077-00012	Screw - Locking	1
3	00-939077-00008	Screw M6	1
4	00-939077-00004	Pin - Carrier	1
5	00-915804	Pin - Carrier - Ejector Plate	2
6	00-439129	Seal - Washer	1
7	00-939077-00030	Shaft - Knife	1
8	00-939077-00031	Lug - Locking	1
9	00-939077-00013	Chamber - Knife	1
10	00-939077-00014	Nut - Plastic	1
11	00-939077-00032	Plate - Motor	1
12	00-439133	Ring - Seal	1
13	00-939077-00015	Screw M4 x 25	4
14	00-939077-00023	Nut M6	AR
15	00-939077-00033	Motor	1
16	SC-124-31	Mach. Screw M6 x 1 x 16mm Slotted Truss Hd. (SST)	4
17	00-939077-00037	Screw M6 x 30	1
18	00-939077-00036	Screw M6 x 40	1
19	00-939077-00034	Hinge - Male	1
20	00-478897	Switch Assy. (Stop)	1
21	00-478898	Switch Assy. (Start)	1
22	00-939077-00040	Housing	1
23	00-939077-00022	Washer - Lock	8
24	00-939077-00042	Screw M6 x 12	6
25	00-939077-00043	Base	1
26	00-939077-00041	Cover - Foot	2
27	00-478878	Foot - Rubber	2
28	00-939077-00009	Wheel Assy	2
29	00-939077-00065	Switch - Magnetic (Order With Item 10)	1

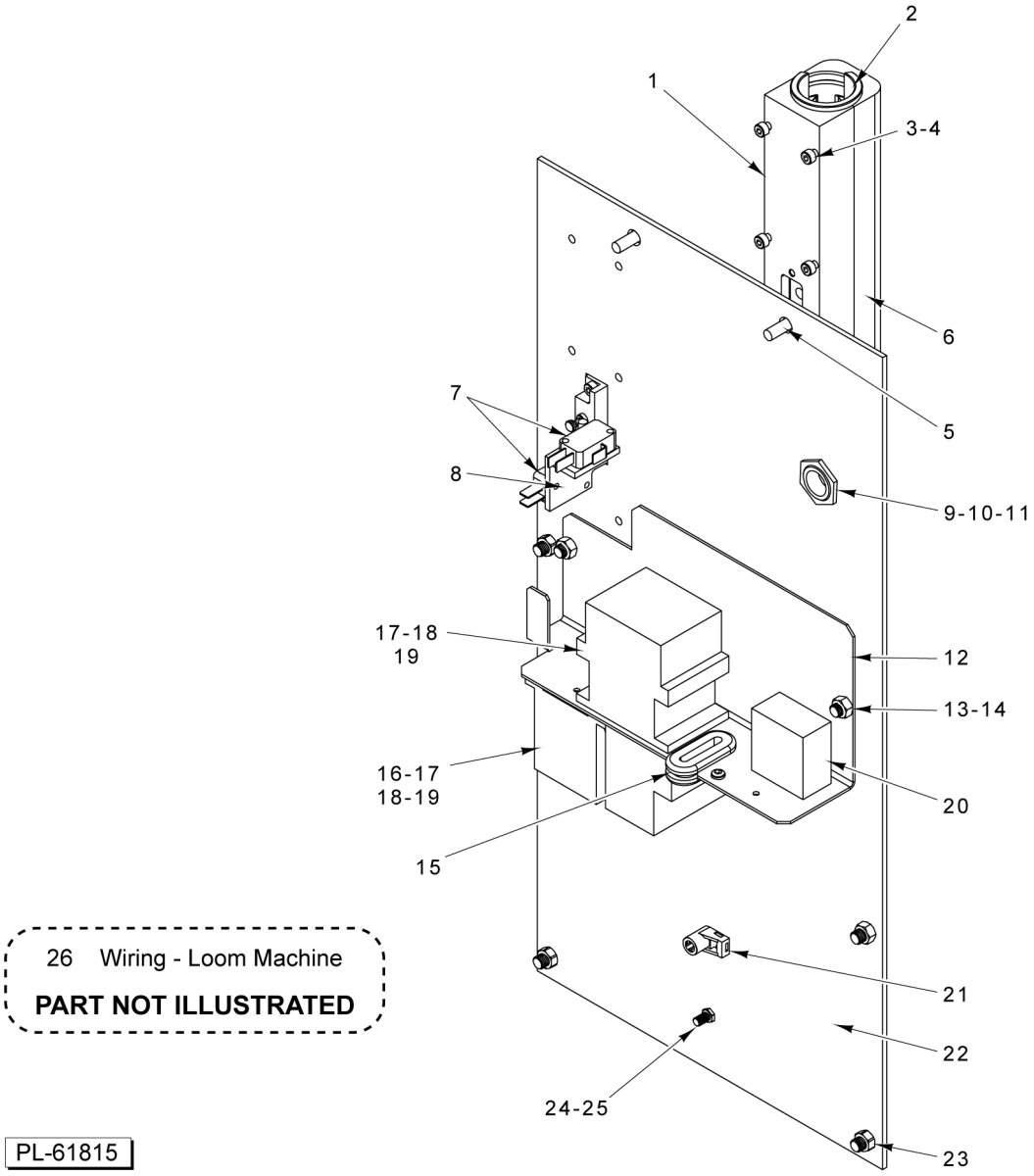

ELECTRICAL PANEL

ELECTRICAL PANEL

ILLUS. PL-61815	PART NO.	NAME OF PART	AMT.
1	00-939077-00019	Bracket Assy	1
2	00-939077-00006	Bushing	1
3	00-939077-00017	Washer - Lock	6
4	00-939077-00018	Screw M4 x 40	6
5	SC-124-31	Mach. Screw M6 x 1 x 16mm Slotted Truss Hd. (SST)	4
6	00-939077-00007	Bushing	1
7	00-939077-00020	Switch - Micro	2
8	00-939077-00010	Micro Switch Assy. (Incls. Item 7 and Micro Switch Rods)	1
9	00-479036	Nut - Strain Relief	1
10	FE-024-97	Relief - Strain	1
11	00-939077-00021	Cord - Power	1
12	00-939077-00024	Plate - Electric	1
13	00-939077-00022	Washer - Lock	2
14	00-915807	Nut M6	AR
15	00-939077-00026	Grommet	1
16	00-939077-00003	Relay - Overload	1
17	00-939077-00025	Din Rail	2
18	00-939077-00002	Contactor	2
19	00-939077-00027	Screw 3.5 x 6.5	2
20	00-939077-00011	Rc Circuit (230 V)	1
21	00-939077-00029	Cable Tie	1
22	00-939077-00028	Housing - Back	1
23	00-939077-00023	Nut M6	AR
24	00-939077-00017	Washer - Lock	6
25	00-915846	Nut	6
26	00-939077-00016	Wiring - Loom Machine	1

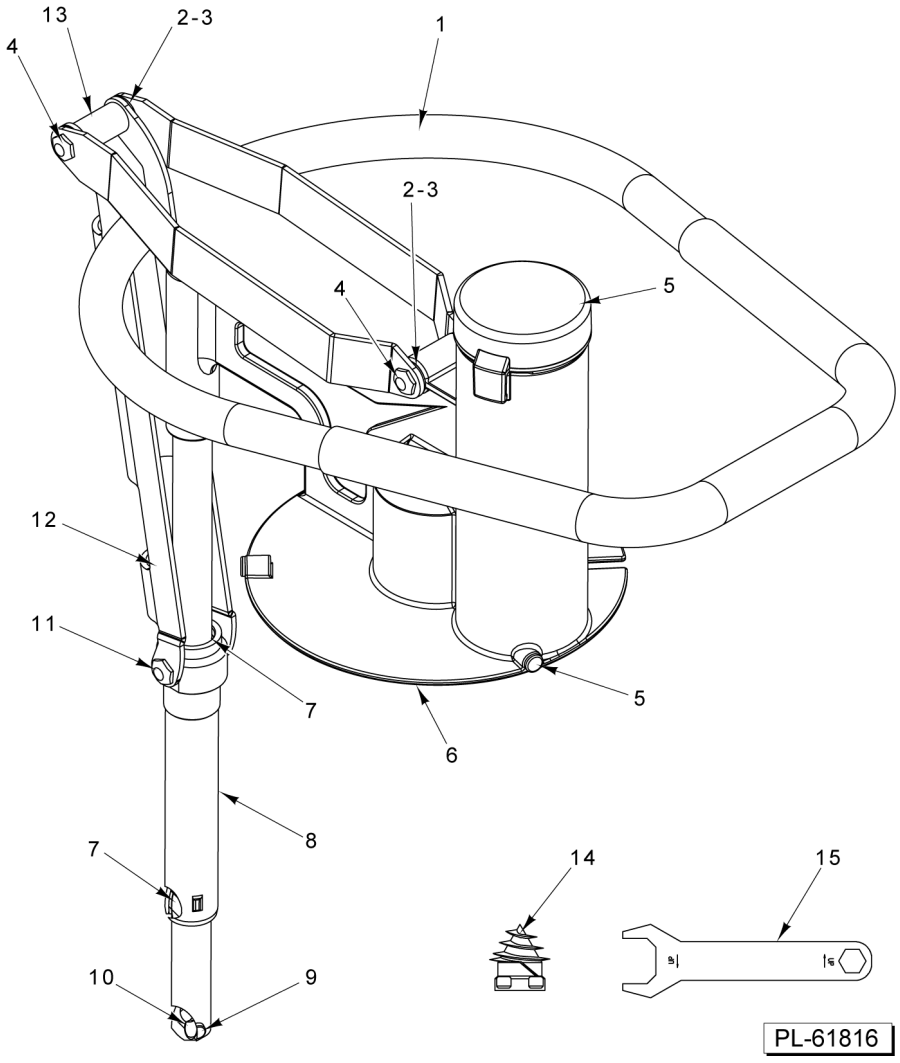

MANUAL PUSH FEEDER

MANUAL PUSH FEEDER

ILLUS. PL-61816	PART NO.	NAME OF PART	AMT.
1	00-939077-00044	Handle - Pusher	1
2	00-914727	Bushing	4
3	00-939077-00045	Shaft	2
4	00-914725	Screw - Link	2
5	00-478864	Knob - Guide	1
6	00-939077-00046	Plate - Feeder (Incldes. Shaft)	1
7	00-939077-00052	Bushing	2
8	00-939077-00049	Sleeve - Link System	1
9	00-939077-00050	Pin	1
10	00-939077-00051	Screw - Lock	1
11	00-939077-00048	Screw M8	2
12	00-939077-00047	Link	1
13	00-939077-00053	Sleeve	1
14	00-478939	Screw - Decoring	1
15	00-439923	Wrench - Center Screw	1

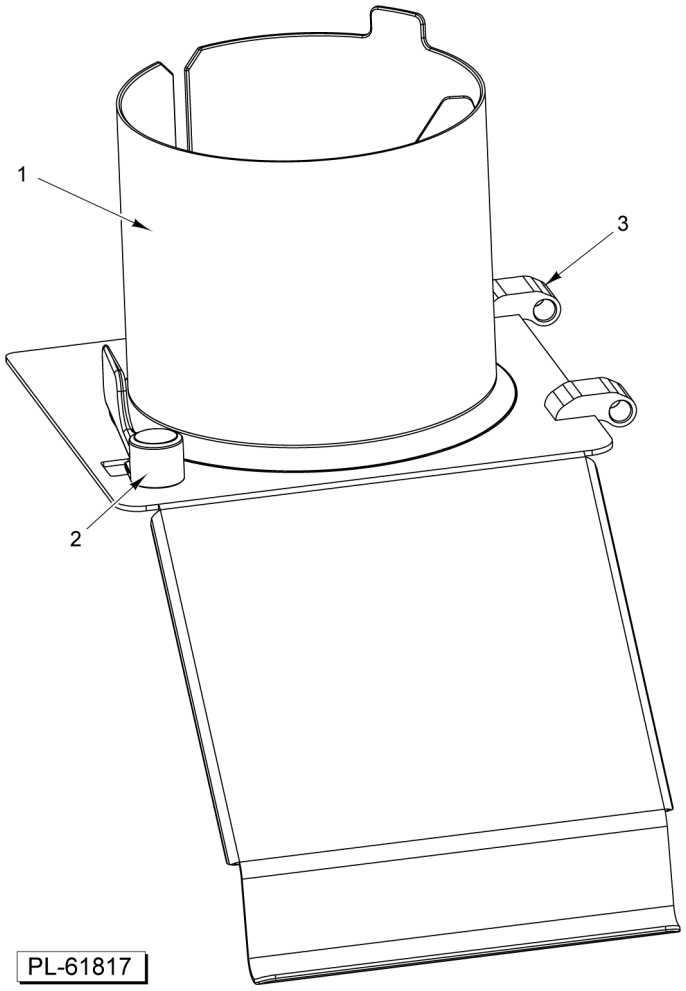

FEED CYLINDER

FEED CYLINDER

ILLUS. PL-61817	PART NO.	NAME OF PART	AMT.
1	00-939077-00054	Feed Cylinder	1
2	00-939077-00055	Locking Handle Assy	1
3	00-939077-00005	Magnet Assy	1

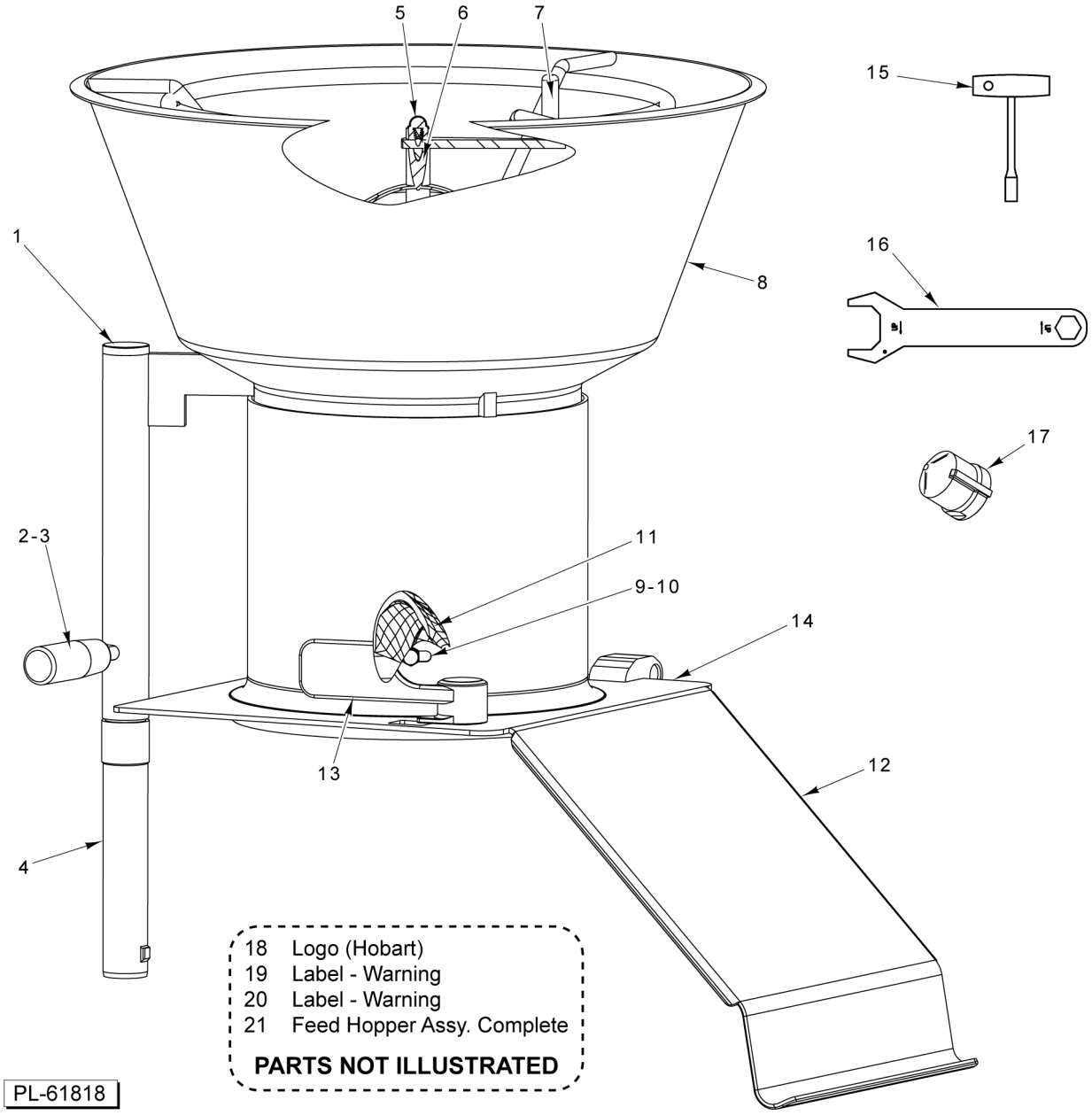

FEED CYLINDER AND HOPPER

FEED CYLINDER AND HOPPER

ILLUS. PL-61818	PART NO.	NAME OF PART	AMT.
1	00-478884	Plug	1
2	00-478883	Handle	1
3	00-477254	Screw - Handle	1
4	00-939077-00056	Shaft	1
5	NS-048-42	Crown Nut M8 x 1.25 (SST)	1
6	00-478860	Lever - Stir	1
7	00-914953	Arm - Hopper	1
8	00-939077-00057	Hopper Assy	1
9	NS-047-34	Crown Nut M6 x 1mm (SST)	1
10	00-938610	Screw - Stud	1
11	00-915839	Guide	1
12	00-939077-00058	Feed Cylinder	1
13	00-939077-00055	Locking Handle Assy	1
14	00-939077-00005	Magnet Assy	1
15	00-479094	Tool	1
16	00-439923	Wrench - Center Screw	1
17	00-939077-00059	Sleeve - Stirring	1
18	00-118364	Logo (Hobart)	1
19	00-916957-00048	Label - Warning	1
20	00-916957-00053	Label - Warning	1
21	00-939069	Feed Hopper Assy. Complete	1

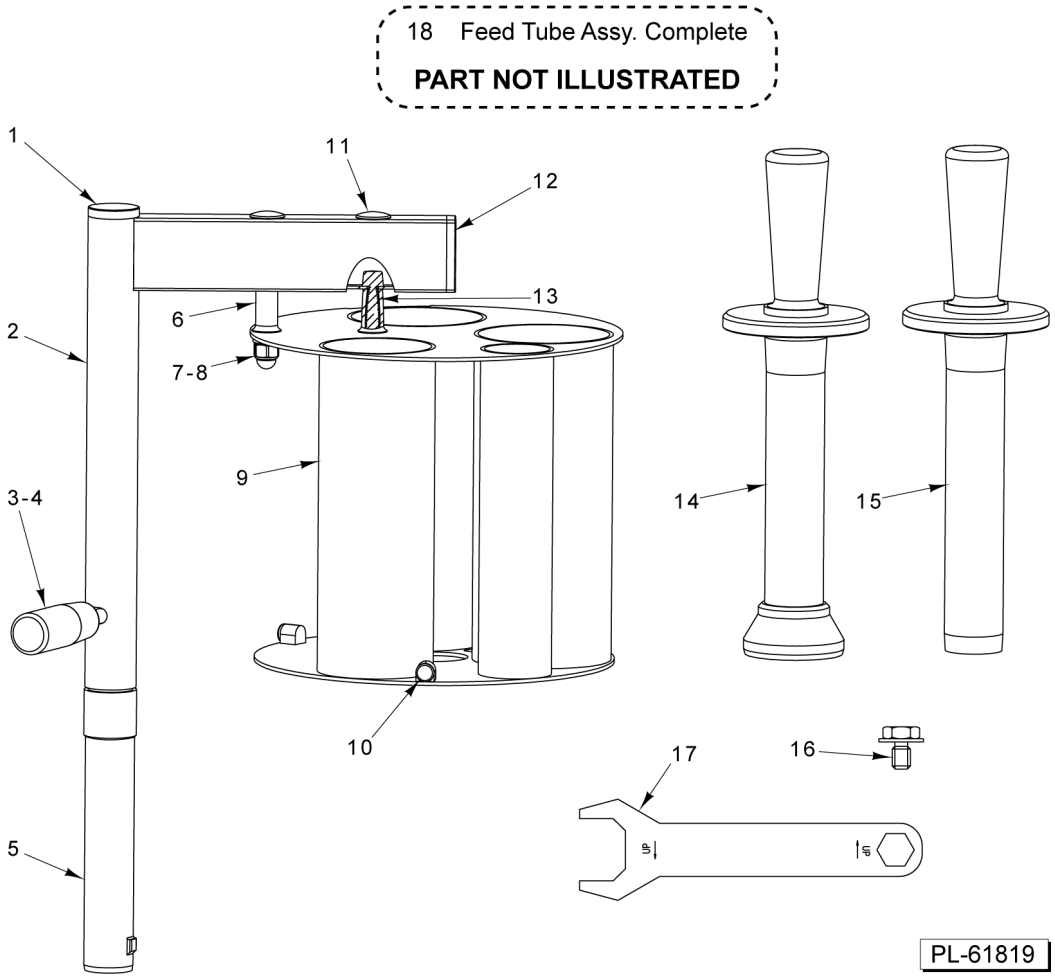

4-TUBE INSERT ASSEMBLY

4-TUBE INSERT ASSEMBLY

ILLUS. PL-61819	PART NO.	NAME OF PART	AMT.
1	00-478884	Plug	1
2	00-939077-00060	Stand	1
3	00-477254	Screw - Handle	1
4	00-478883	Handle	1
5	00-939077-00056	Shaft	1
6	00-938607	Spacer	1
7	NS-048-42	Crown Nut M8 x 1.25 (SST)	1
8	00-915824	Washer	1
9	00-939077-00061	4-Tube Insert Assy	1
10	00-478864	Knob - Guide	1
11	00-479574	Plug (1 KPT)	1
12	00-479573	Plug - Rectangle (IR20)	1
13	00-938981-00003	Screw	1
14	00-939077-00062	Plunger - Wide	1
15	00-939077-00063	Plunger - Narrow	1
16	00-479569	Bolt - Locking (Use to Secure Cutting Plates)	1
17	00-439923	Wrench - Center Screw	1
18	00-939068	Feed Tube Assy. Complete	1

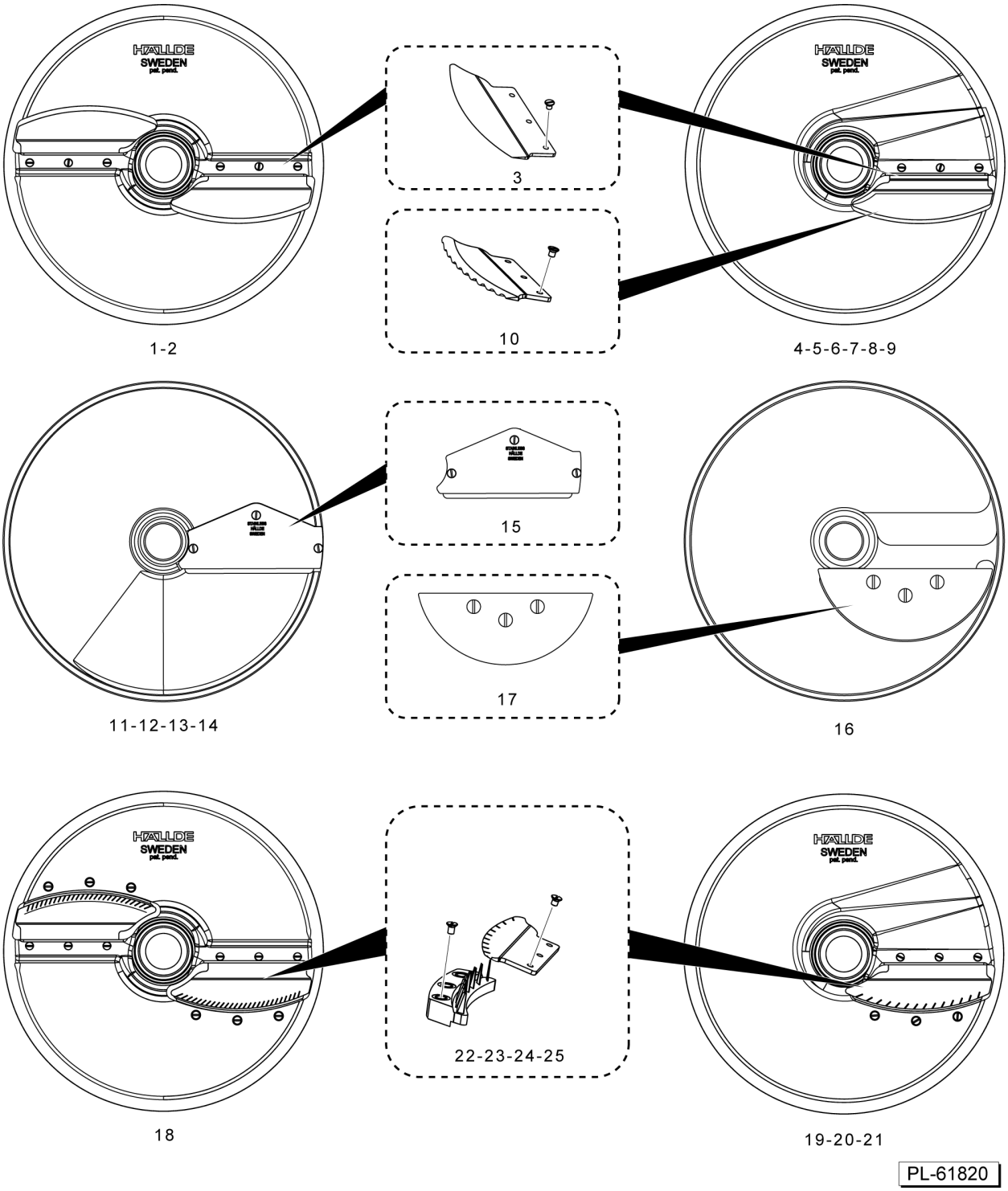

ACCESSORIES
(SLICER / JULIENNE)

ACCESSORIES
(SLICER / JULIENNE)

ILLUS. PL-61820	PART NO.	NAME OF PART	AMT.
1	00-915571	Plate - Fine Slicer 1/32 In. (1mm) (Incls. Item 3)	1
2	00-915570	Plate - Fine Slicer 1/16 In. (1.5mm) (Incls. Item 3)	1
3	00-915636	Knife - Slicer	AR
4	00-915572	Plate - Fine Slicer 1/8 In. (3mm) (Incls. Item 3)	1
5	00-915575	Plate - Slicer 5/32 In. (4mm) (Incls. Item 3)	1
6	00-915576	Plate - Slicer 7/32 In. (6mm) (Incls. Item 3)	1
7	00-915775	Plate - Slicer 5/16 In. (8mm) (Incls. Item 3)	1
8	00-915573	Plate - Slicer 3/8 In. (10mm) (Incls. Item 3)	1
9	00-915574	Plate - Slicer 5/32 In. (4mm) (Crimping) (Incls. Item 10)	1
10	00-915637	Knife - Slicer (Crimping)	AR
11	00-914707	Plate - Soft Dicing 5/16 In. (8mm) (Incls. Item 15)	1
12	00-914708	Plate - Soft Dicing 3/8 In. (10mm) (Incls. Item 15)	1
13	00-914719	Plate - Soft Dicing 1/2 In. (12mm) (Incls. Item 15)	1
14	00-914713	Plate - Soft Dicing 5/8 In. (15mm) (Incls. Item 15)	1
15	00-914791	Knife - Soft Dicing	AR
16	00-915732	Plate - Fine Cut Slicer 9/16 In. (14mm) (Incls. Item 17)	1
17	00-439158	Knife - Fine Slicer	AR
18	00-915559	Plate - Julienne 5/64 In. (2mm) (Incls. Item 22)	1
19	00-915558	Plate - Julienne 5/32 In. (4mm) (Incls. Item 23)	1
20	00-915560	Plate - Julienne 7/32 In. (6mm) (Incls. Item 24)	1
21	00-915557	Plate - Julienne 3/8 In. (10mm) (Incls. Item 25)	1
22	00-915639	Kit - Julienne 2 x 2mm	AR
23	00-915640	Kit - Julienne 4 x 4mm	AR
24	00-915641	Kit - Julienne 6 x 6mm	AR
25	00-915638	Kit - Julienne 10 x 10mm	AR

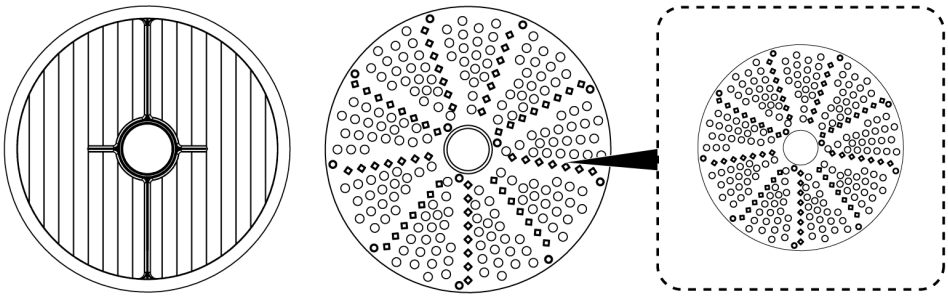

1 2 3

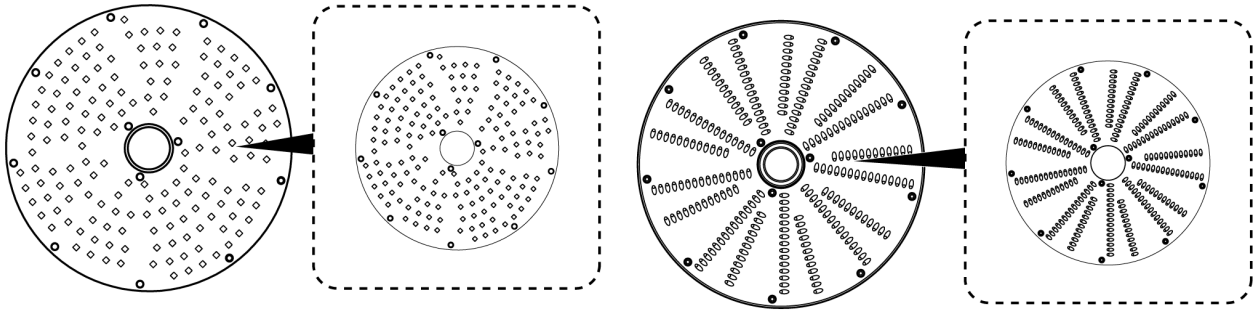

4 5 6-7 8-9

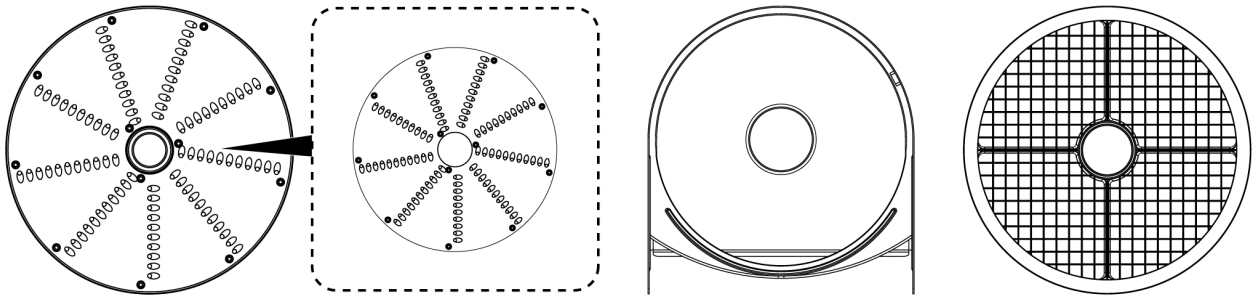

10-11-12-13-14 15-16-17-18-19 20 21-22-23-24-25-26 27-28-29-30-31

PL-61821

ACCESSORIES (SHREDDER / GRATER / DICER)

ACCESSORIES
(SHREDDER / GRATER / DICER)

ILLUS. PL-61821	PART NO.	NAME OF PART	AMT.
1	00-915748	Plate - French Fry Grid 3/8 In. (10mm)	1
2	00-915556	Plate - Fine Grater 1/16 In. (1.5mm)	1
3	00-915555	Plate - Cheese Grater	1
4	00-439143	Insert - Fine Grater	AR
5	00-915733	Insert - Hard Cheese	AR
6	00-915563	Plate - Shredder 1/16 In. (1.5mm)	1
7	00-915568	Plate - Shredder 5/64 In. (2mm)	1
8	00-439145	Insert - Shredder Plate 1/16 In. (1.5mm)	AR
9	00-439146	Insert - Shredder Plate 5/64 In. (2mm)	AR
10	00-915564	Plate - Shredder 1/8 In. (3mm)	1
11	00-915567	Plate - Shredder 5/32 In. (4.5mm)	1
12	00-915569	Plate - Shredder 7/32 In. (6mm)	1
13	00-915566	Plate - Shredder 5/16 In. (8mm)	1
14	00-915565	Plate - Shredder 3/8 In. (10mm)	1
15	00-439147	Insert - Shredder Plate 1/8 In. (3mm)	AR
16	00-439148	Insert - Shredder Plate 5/32 In. (4.5mm)	AR
17	00-439149	Insert - Shredder Plate 7/32 In. (6mm)	AR
18	00-439150	Insert - Shredder Plate 5/16 In. (8mm)	AR
19	00-915734	Insert - Shredder Plate 3/8 In. (10mm)	AR
20	00-938558	Tray	1
21	00-915746-00001	Plate - Dicer 9/32 In. (7.5 mm)	1
22	00-915746-00002	Plate - Dicer 3/8 In. (10 mm)	1
23	00-915746-00003	Plate - Dicer 1/2 In. (12 mm)	1
24	00-915746-00004	Plate - Dicer 5/8 In. (15 mm)	1
25	00-915746-00005	Plate - Dicer 3/4 In. (20 mm)	1
26	00-915746-00006	Plate - Dicer 7/32 In. (6 mm)	1
27	00-915746-00007	Plate - Dicer 1 In. (25 mm)	1
28	00-915744-00001	Plate - Dicer Low 3/4 In. (20 mm)	1
29	00-915744-00002	Plate - Dicer Low 1 In. (25 mm)	1
30	00-915744-00003	Plate - Dicer Low 1/2 In. (12 mm)	1
31	00-915744-00004	Plate - Dicer Low 5/8 In. (15 mm)	1