CATALOG OF REPLACEMENT PARTS



FD3 SERIES FOOD WASTE DISPOSERS

ML-110325	FD3-50
ML-110327	FD3-75
ML-110329	FD3-125

A product of HOBART 701 S. RIDGE AVENUE TROY, OHIO 45374-0001

FORM 43293 (April 2014)

 © HOBART 2014

Table of Contents

5 DISPOSER UNIT (FD3-50, FD3-75, & FD3-125)

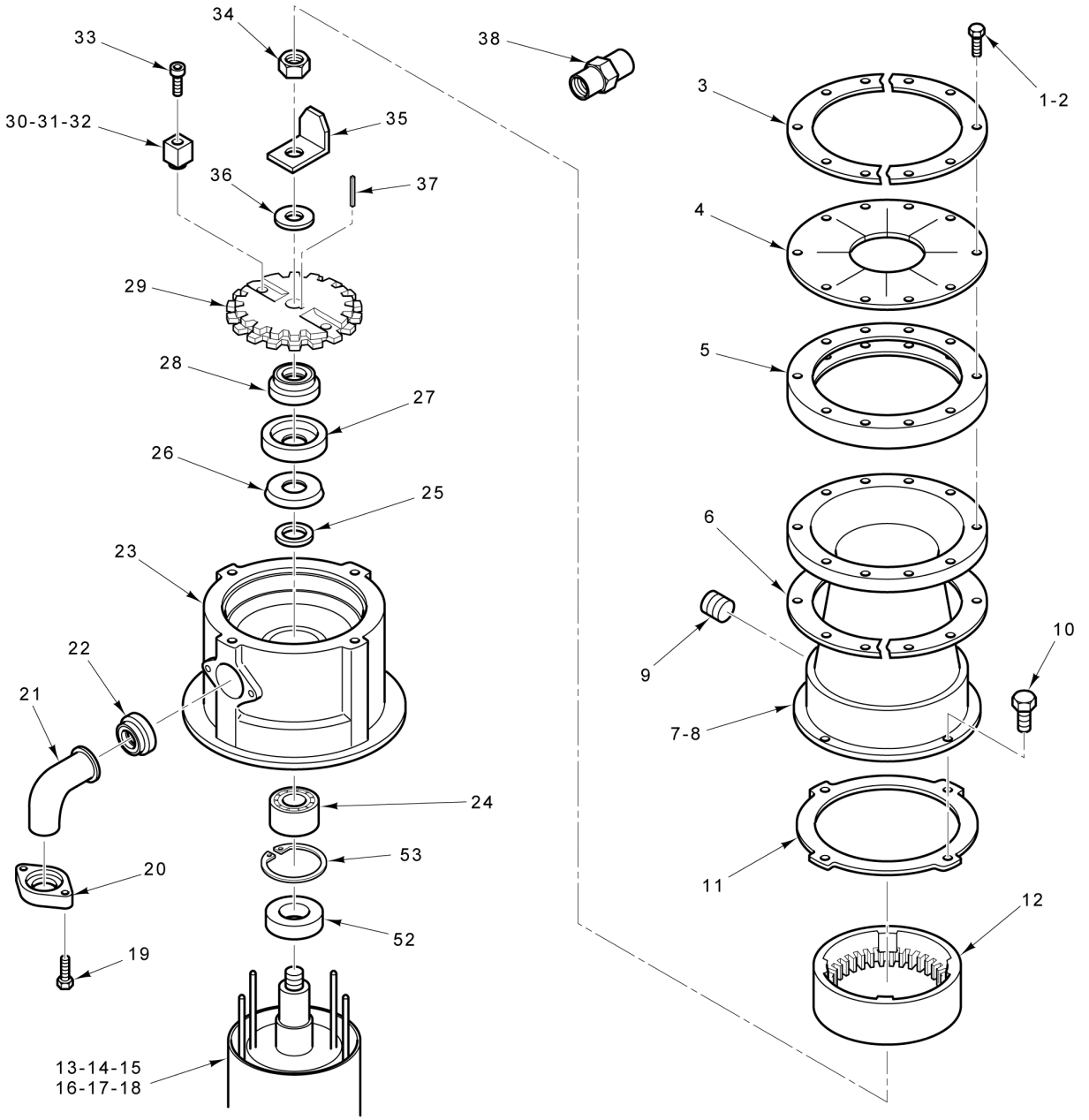

39	00-289004-00003	Upper Housing & Shredder Assy.
40	00-289004-00001	Upper Housing & Shredder Assy.
41	00-289036	Kit - Seal & Bearing
42	00-292122	Ring - Scrap (7 In.)
43	00-292123	Flange - Sink (7 In.)
44	ML-033268-0000Z	Kit - Cone Disposer Cover (15 In.)
45	ML-033269-0000Z	Kit - Cone Disposer Cover (18 In.)
46	00-294904	Shim - Spring

PARTS NOT ILLUSTRATED

47	00-475185-00001	Overload - Reset
48	00-475185-00002	Overload - Reset
49	00-475185-00004	Overload - Reset
50	00-475185-00005	Overload - Reset
51	00-475185-00008	Switch - Start

PARTS NOT ILLUSTRATED

PL-60385

DISPOSER UNIT
(FD3-50, FD3-75, & FD3-125)

DISPOSER UNIT
(FD3-50, FD3-75, & FD3-125)

ILLUS. PL-60385	PART NO.	NAME OF PART	AMT.
1	SC-118-16	Cap Screw 1/4-20 x 1-3/8 Hex Hd. (Use With Item 7)	10
2	SC-041-12	Cap Screw 5/16-18 x 7/8 Hex Hd. (SST) (Use With Item 8)	3
3	00-203185	Ring - Top Cone Clamp (Half)	2
4	00-202105	Guard - Splash (8-1/16 In. Bolt Circle) (Use With Item 7)	1
5	00-201492	Ring - Isolating	1
6	00-203191	Ring - Bottom Cone Clamp (Half)	2
7	00-289015	Housing - Upper (8-1/8 In. High, 8-1/16 In. Bolt Circle, 8-11/16 In. O.D. Flange)	1
8	00-289006	Housing - Upper (5-1/2 In. High, 4-1/2 In. Bolt Circle, 6-7/8 O.D. Flange)	1
9	FP-066-02	Plug 1/2 Sq. Hd. Pipe	1
10	SC-036-13	Cap Screw 1/4-20 x 3/4 Hex Hd	4
11	00-289001	Gasket - Waste	1
12	00-201227	Ring - Shredder	1
13	00-475137-00005	Motor (110-120/200-240 V., 50/60 Hz., 1 Ph.) (ML-110327)	1
14	00-475137-00006	Motor (110-120/200-240 V., 50/60 Hz., 1 Ph.) (ML-110329)	1
15	00-475137-00003	Motor (200-240/380-415/460 V., 50/60 Hz., 3 Ph.) (ML-110327)	1
16	00-475137-00004	Motor (200-240/380-415/460 V., 50/60 Hz., 3 Ph.) (ML-110329)	1
17	00-475137-00010	Motor (110-120/200-240 V., 50/60 Hz., 1 Ph.) (ML-110325)	1
18	00-475137-00011	Motor (200-240/380-415/460 V., 50/60 Hz., 3 Ph.) (ML-110325)	1
19	SC-041-12	Cap Screw 5/16-18 x 7/8 Hex Hd. (SST)	2
20	00-200731	Flange - Spout	1
21	00-203401	Spout - Waste	1
22	00-201404	Gasket - Spout	1
23	00-289008	Housing - Lower	1
24	BB-021-08	Ball Bearing - Hoover #6303	1
25	00-202717	Spacer - Shaft	1
26	00-202725	Slinger - Water	1
27	00-203194	Support - Seal	1
28	00-117071	Water Seal Assy	1
29	00-201250-00001	Flywheel	1
30	00-201223-00003	Cutter - Flywheel (ML-110325)	2
31	00-201223-00001	Cutter - Flywheel (ML-110327)	2
32	00-201223-00004	Cutter - Flywheel (ML-110329)	2
33	00-202556-00001	Screw	2
34	NS-031-39	Stop Nut 1/2-20 "Elastic"	1
35	00-201235	Cutter - Hi-Bulk	1
36	00-272003	Seal - Shaft	1
37	00-203619-00001	Key - Shaft	1
38	00-201721-00001	Flow Control (5 G.P.M.)	1
39	00-289004-00003	Upper Housing & Shredder Ring Assy. (Incls. Items 1, 3 thru 7, 9, & 12)	1
40	00-289004-00001	Upper Housing & Shredder Ring Assy. (Incls. Items 2, 8, 9, & 12)	1
41	00-289036	Kit - Seal & Bearing (Incls. Items 24 thru 28, 34, 36, 52, & 53)	1
42	00-292122	Ring - Scrap (7 In.)	1
43	00-292123	Flange - Sink (7 In. I.D.)	1
44	ML-033268-0000Z	Kit - Cone Disposer Cover (15 In.)	1
45	ML-033269-0000Z	Kit - Cone Disposer Cover (18 In.)	1
46	00-294904	Shim - Spring (Used Under Bearing Bracket End Motor Bearing)	1
47	00-475185-00001	Overload - Reset (1 Ph.) (ML-110325 & ML-110327)	1
48	00-475185-00002	Overload - Reset (1 Ph.) (ML-110329)	1
49	00-475185-00004	Overload - Reset (3 Ph.) (ML-110325 & ML-110327)	1
50	00-475185-00005	Overload - Reset (3 Ph.) (ML-110329)	1
51	00-475185-00008	Switch - Start	1
52	00-201448	Seal - Oil	1
53	RR-008-15	Retaining Ring	1