HOBART

INSTRUCTION MANUAL

... with Replacement Parts



MODELS
FD3-150, FD3-200 & FD3-300
FOOD WASTE DISPOSERS

ML-110301	FD3-150
ML-110305	FD3-200
ML-110309	FD3-300

A product of HOBART CORPORATION 701 RIDGE AVENUE TROY, OHIO 45374-0001

FORM 19307 Rev. B (9-97)

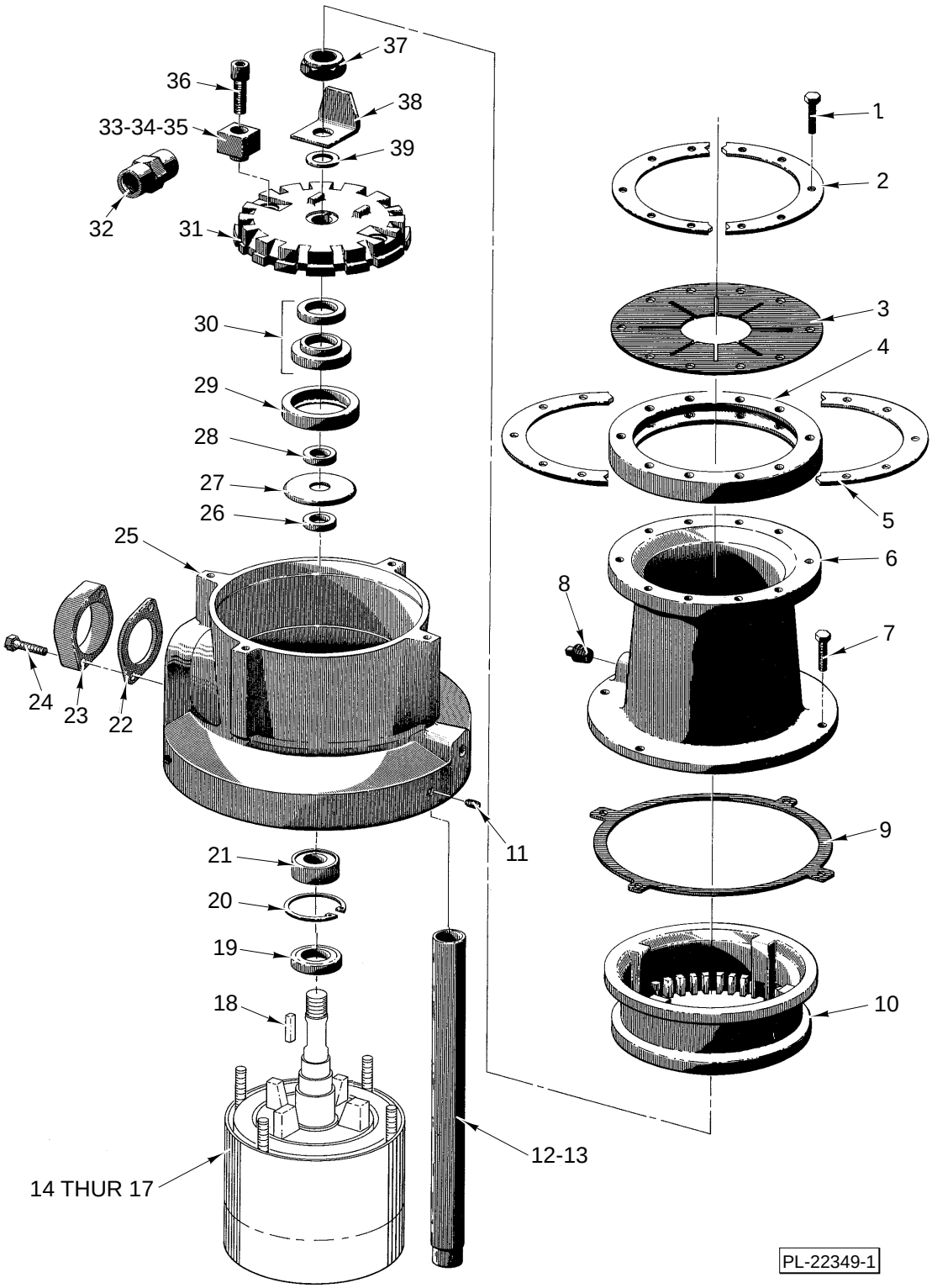

DISPOSER UNIT

DISPOSER UNIT

ILLUS. PL-22349-1	PART NO.	NAME OF PART	AMT.
1	SC-118-16	Cap Screw ¼-20 x 1 ⅜ Hex Hd.	10
2	00-203185	Ring - Top Cone Clamp (Half)	2
3	00-202105	Guard - Splash	1
4	00-201492	Ring - Isolating	1
5	00-203191	Ring - Bottom Cone Clamp (Half)	2
6	00-200942-00001	Housing - Upper	1
7	SC-041-12	Cap Screw 5/16-18 x ⅞ Hex Hd.	4
8	FP-066-02	Plug ½ Sq. Hd. Pipe	1
9	00-289002	Gasket - Waste	1
10	00-201228	Ring - Shredder	1
11	SC-088-36	Set Screw 5/16-18 x ½ Hex Hdls. Cup Pt.	3
12	00-288380-00001	Leg & Bullet Foot	3
13	00-289026-00001	Leg & Flanged Foot	3
14	00-475137-00001	Motor (120/208-240 V., 60 Hz., 1 Ph.)(ML-110301 & ML-110305)	1
15	00-475137-00002	Motor (110-120/220-240 V., 50 Hz., 1 Ph.)(ML-110301 & ML-110305)	1
16	00-475137-00007	Motor (208-240/480 V.,60 Hz.,3 Ph. & 220-240/380-415 V.,50 Hz., 3 Ph.)(ML-110301)	1
17	00-475137-00008	Motor (208-240/480 V.,60 Hz.,3 Ph. & 220-240/380-415 V.,50 Hz., 3 Ph.)(ML-110305 & ML-110309)	1
18	00-203619-00001	Key - Shaft	2
19	00-288999	Seal - Oil	1
20	RR-006-02	Retaining Ring	1
21	BB-017-39	Ball Bearing - MRC 205 SZZ-01-ST-A-92-C	1
22	00-201420	Gasket - Spout	1
23	00-204852	Flange - Outlet	1
24	SC-036-40	Cap Screw 5/16-18 x 1 ¼ Hex Hd.	2
25	00-473199	Lower Housing	1
26	00-289012	Spacer	1
27	00-202724	Slinger - Water	1
28	00-289012	Spacer	1
29	00-203193	Support - Seal	1
30	00-114144	Water Seal Assy.	1
31	00-201210	Flywheel	1
32	00-292120	Flow Control (8 G.P.M.)	1
33	00-201223-00003	Cutter - Flywheel (ML-110301)	2
34	00-201223-00001	Cutter - Flywheel (ML-110305)	2
35	00-201223-00004	Cutter - Flywheel (ML-110309)	2
36	00-202556-00002	Screw	2
37	NS-031-43	Stop Nut ¾-16 “Elastic”	1
38	00-201234	Cutter - Hi-Bulk	1
39	00-272004	Seal - Shaft	1
	00-289037	Seal & Bearing Kit (Incls. items 19, 20, 26 thru 30 & 39)	1
	00-294904	Shim, Spring (Used Under Brg. Bracket End Motor Bearing)	1

Installation, Operation, and Care of MODELS FD3-150, FD3-200, & FD3-300 FOOD WASTE DISPOSERS

SAVE THESE INSTRUCTIONS

GENERAL

The disposer features removable hardened steel components and reversible rotation with grinding in both directions. The disposer is self-feeding, making it unnecessary to force the food waste into the grinding mechanism.

The FD3 Series disposers utilize hardened steel cutter blocks (1, Fig. 1) mounted to a rotating flywheel (4, Fig. 1) and a stationary shredder ring (2 Fig. 1) to grind food waste to a small particle size for discharge through waste lines. With the motor running and flushing water turned on, food waste is reduced to grinding size by the rotating "hi-bulk" cutter (3, Fig. 1). Grinding occurs as the food waste is forced against the shredder ring by the cutter blocks and the centrifugal force due to rotation. The flushing water aids the grinding action and discharges ground food waste into the waste line.

Control groups and accessory groups are available to suit each installation.

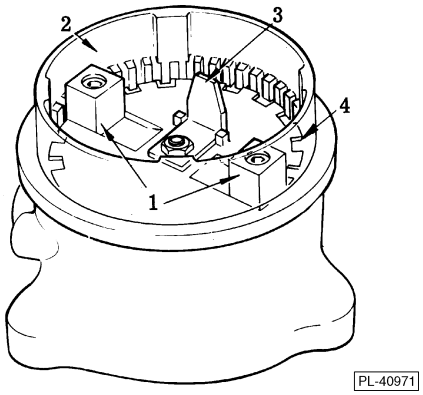

Fig. 1

INSTALLATION

Immediately after unpacking the disposer, check for possible shipping damage. If the disposer is found to be damaged, save the packaging material and contact the carrier within 15 days of delivery.

Prior to installation, test the electrical service to make sure that it agrees with the specifications on the disposer data plate.

Use legs and temporary blocking to support disposer during installation to avoid excessive stress at welded or soldered cone to table connection.

ASSEMBLY

Use the following procedure to attach the disposer assembly to the cone (see Figs. 2 and 5).

Raise the disposer into position using the adjustable feet to bring the disposer into firm contact with the cone flange. Do not place the weight of the disposer on the cone.

Turn each adjustable foot as required to complete height and level adjustments.

Assemble the clamp ring halves using the ten screws and tighten screws finger tight. Rotate disposer to the desired position. Tighten the ten screws evenly to form a water tight joint.

For an accessory group D installation, use the mounting flange (1, Fig. 3) included with accessory group D. See Fig. 3 and the accessory group data sheet.

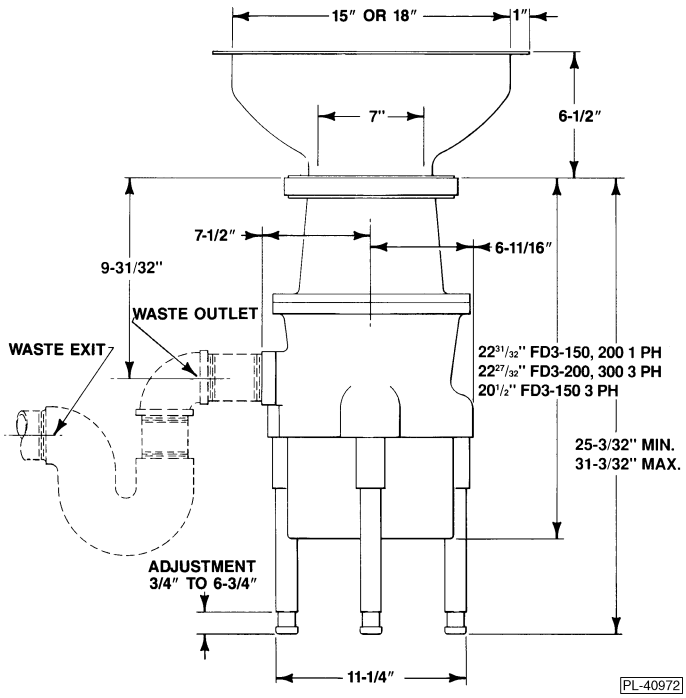

Fig. 2

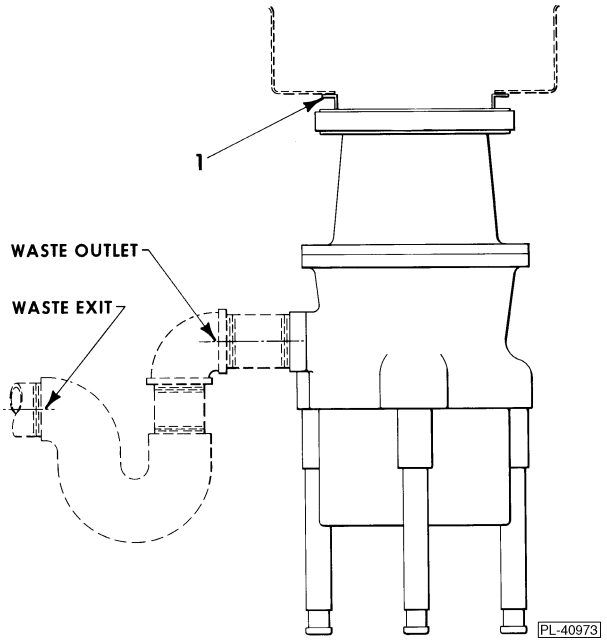

Fig. 3

WARNING: HAZARDOUS MOVING PARTS — DO NOT OPERATE DISPOSER UNTIL PROPERLY INSTALLED TO CONE.

Use one of the following: Part No. 204006 or 204007 (15 inch diameter cone) or Part No. 204003 or 204004 (18 inch diameter cone). For custom-built installations — minimum thickness of stainless steel cone shall be .035 inches and minimum height of cone (vertical distance from work surface to disposer sink flange) shall be 6 inches (Fig. 4).

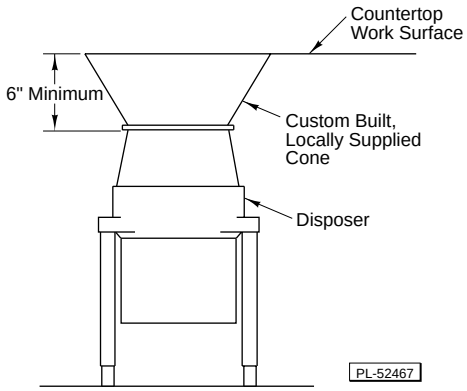

Fig. 4

PLUMBING

WARNING: PLUMBING CONNECTIONS MUST COMPLY WITH APPLICABLE SANITARY, SAFETY AND PLUMBING CODES.

Drain

The disposer is furnished with a waste discharge outlet flange (7, Fig. 5) threaded with a standard 2" IPS tapered thread. Install waste lines with the shortest possible run and best fall. If possible, use a fall of 1/4" per foot. The waste exit must be lower than the waste outlet (see Fig. 2). The waste lines must be thoroughly cleaned. Ream burrs from cut pipe ends and use fittings which will permit unrestricted flow. Drum traps and grease traps must NOT be used.

Water Connections

Connect disposer (1, Fig. 5) from a 3/4" IPS cold water supply line. Install the eight gallon per minute flow control supplied with the disposer (2, Fig. 5). If the water line pressure exceeds 60 psig, a pressure reducing valve (6, Fig. 5) (not supplied) should be installed. The minimum flow pressure for the disposer to function properly is 16 psig. Install a shut-off valve (not supplied) for proper servicing of the disposer.

All control groups are supplied with a solenoid valve (4, Fig. 5 or 3, Fig. 6) which must be installed in the water supply line as shown. Control Group 3 is furnished with a pressure switch (5, Fig. 5 or 4, Fig.6) which must be installed between the solenoid valve and pressure reducing valve. If there is no pressure reducing valve in the water supply line, install the pressure switch between the solenoid and the shut-off valve.

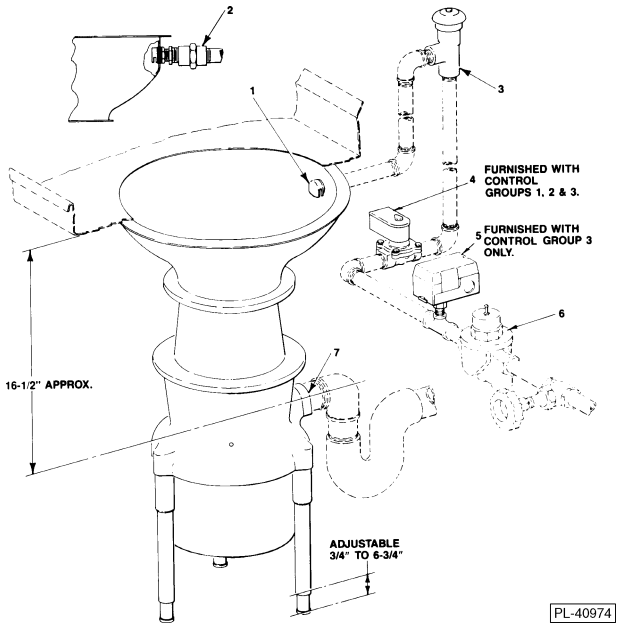

Fig. 5

Install a vacuum breaker (3, Fig. 5) according to the local plumbing codes. If local plumbing codes prohibit the use of a vacuum breaker, install an air gap water inlet (2, Fig. 6) (not supplied) observing the local codes.

ELECTRICAL CONNECTIONS

WARNING: ELECTRICAL AND GROUNDING CONNECTIONS MUST COMPLY WITH THE APPLICABLE PORTIONS OF THE NATIONAL ELECTRICAL CODE AND/OR OTHER LOCAL ELECTRICAL CODES.

WARNING: DISCONNECT ELECTRICAL POWER SUPPLY AND PLACE A TAG AT THE DISCONNECT SWITCH INDICATING THAT YOU ARE WORKING ON THE CIRCUIT.

This unit must be connected to a dedicated, acceptable motor control switch with a marked OFF position to disconnect the appliance from all ungrounded supply conductors. The switch must be mounted within sight of the disposer or sink opening for the disposer.

Knockouts are provided in the motor junction box for making electrical connections to the unit. Flexible conduit should be used to permit moving the unit for periodic servicing and maintenance.

Select and follow wiring diagram, furnished with machine, applicable to your disposer and electrical service.

OPERATION

Before operating disposer make sure it is clear of foreign objects such as metal or wire clippings, screws, nails, etc., which may have dropped into it during installation. Check the flywheel for free rotation.

WARNING: NEVER USE YOUR HAND TO CHECK ROTATION OF FLYWHEEL OR TO REMOVE FOREIGN MATTER FROM THE DISPOSER. USE A STICK OR SIMILAR OBJECT TO TURN THE FLYWHEEL. FOREIGN MATTER CAN BE REMOVED WITH TONGS OR PLIERS.

Start the disposer before feeding food waste. Be sure water is flowing. With typical optional controls, water flow and unit starting are simultaneous and automatic. Feed food waste into disposer. DO NOT feed china, metal, rags, clam shells, or similar material into the unit. DO NOT put grease or oil in the disposer. Oil or grease can clog the drain. Always allow the disposer to run for a short period after grinding is complete to assure proper flushing of the disposer and waste line. This flushing is automatically controlled with certain optional controls.

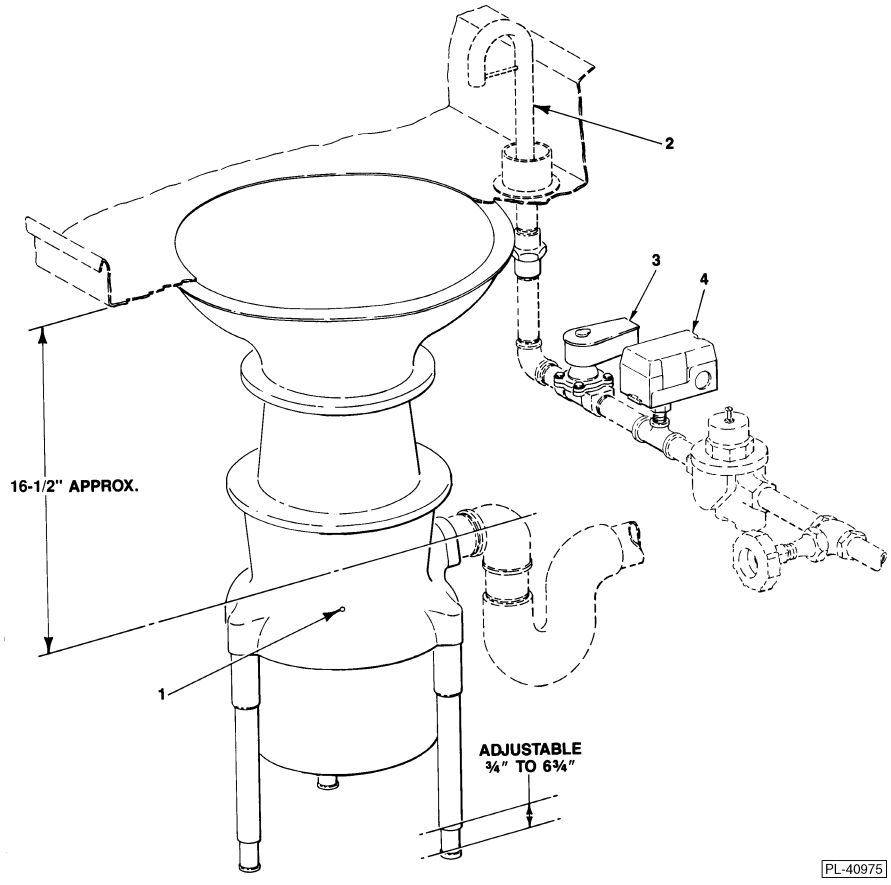

Fig. 6

CONTROLS

WARNING: NEVER REACH INSIDE THIS DISPOSER WHILE IT IS OPERATING.

The operation of the disposer and additional available controls will depend on the selection of control devices. Refer to control group data sheet.

CLEANING

The food waste disposer should be kept in a clean and sanitary condition. Allow the disposer to run a few minutes after disposing of all food waste to completely flush out the interior. If food waste is allowed to accumulate due to improper clean-up, it will give off offensive odors. If this happens, cleaning can be accomplished by using a stiff brush with a strong soap and hot water solution. Light cleaning can be accomplished by grinding ice and a lemon through the disposer.

CAUTION: Do not use chemical solvents or other drain cleaning compounds through the disposer.

MAINTENANCE

LUBRICATION

No lubrication is required for the food waste disposer. The disposer has grease packed sealed bearings requiring no service.

CUTTER BLOCKS

The cutter blocks (1, Fig. 1) may be rotated by a qualified Hobart Service Technician if the cutting edges become worn.

OVERLOAD PROTECTION

The disposer motor is protected by a thermal, resettable overload protector and will trip if the motor is overloaded. To reset, allow approximately five minutes for cooling, then press the manual reset button located on the motor shell opposite the motor junction box. An arrow on the motor shell indicates location of the button. Restart the disposer using normal operating procedure. If overload protector continues to trip, contact your local Hobart Service Office.

WATER SEAL VENT

A small weep hole (1, Fig. 6) in the side of the lower housing vents the dry side of the water seal. Water leaking from this weep hole is an indication of water seal leakage. If leaking, the water seal should be replaced. DO NOT plug or put grease in the weep hole.