HOBART

CATALOG OF REPLACEMENT PARTS

CU48 & CU60 SERIES COMPACT UNDERCOUNTER FOOD STORAGE CABINETS (Kansas City)

Machines Starting With Serial Number 32XXXXXXX

CU48 REFRIGERATOR	**ML-111185**
CUG48 FREEZER	**ML-111186**
CUS48 REFRIGERATOR PREP	**ML-111187**
CU60 REFRIGERATOR	**ML-111188**
CUF60 FREEZER	**ML-111189**
CUS60 REFRIGERATOR PREP	**ML-111190**



A product of HOBART CORPORATION 701 S. RIDGE AVENUE TROY, OHIO 45374-0001

FORM 34467 (Feb. 2000)

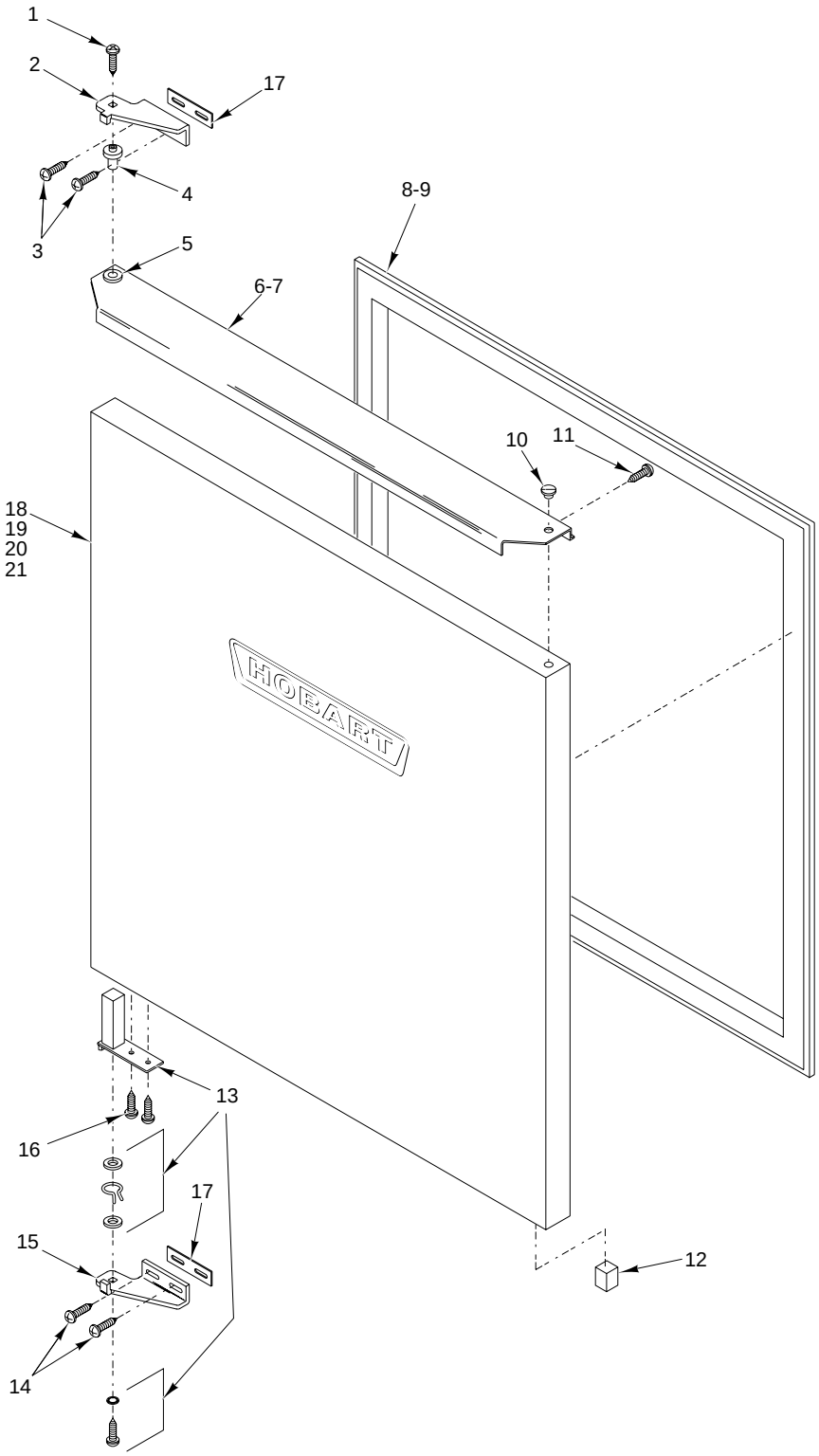

PL-55008

DOOR - CABINET
(2 PER UNIT REQ'D)

DOOR - CABINET
(2 PER UNIT REQ'D)

ILLUS. PL-55008	PART NO.	NAME OF PART	AMT.
1	SC-066-22	Mach. Screw 10-32 x ⅜ Truss Hd.	1
2	00-282544	Plate - Hinge (Lower RH) (Upper LH)	1
3	SD-015-25	Self-Tapping Screw ¼-20 x ⅝ Hex Washer Hd., Type TT	2
4	00-433583	Pin-Upper Hinge Pivot	1
5	00-267174	Bushing - Door Stop (Short)	1
6	00-433813-00002	Handle (Incls. Bonding Tape) (CU28)	1
7	00-433813-00001	Handle (Incls. Bonding Tape) (CU60)	1
8	00-433623-00002	Gasket - Door (CU48)	1
9	00-433623	Gasket - Door (CU60)	1
10	PB-004-26	Plug Button	1
11	SD-032-31	Self-Tapping Screw 8-18 x ⅜ Phil Pan Hd., Type B	4
12	00-433680	Square Plug	1
13	00-282543	Hinge - Power Cartridge Assy. (Incls. Spring, Washers & Retaining Screw)	1
14	SD-015-25	Self-Tapping Screw ¼-20 x ⅝ Hex Washer Hd., Type TT	2
15	00-282545	Plate - Hinge (Lower LH) (Upper RH)	1
16	SD-033-78	Self-Tapping Screw 10-24 x ½ Phil Truss Hd., Type D	4
17	00-433756	Spacer-Hinge	2
18	00-433676-00018	Door Assy. (RH) (Incls. Items 1 Thru 17) (CU48)	1
19	00-433676-00002	Door Assy. (RH) (Incls. Items 1 Thru 17) (CU 60)	1
20	00-433676-00017	Door Assy. (LH) (Incls. Items 1 Thru 17) (CU48)	1
21	00-433676-00001	Door Assy. (LH) (Incls. Items 1 Thru 17) (CU60)	1

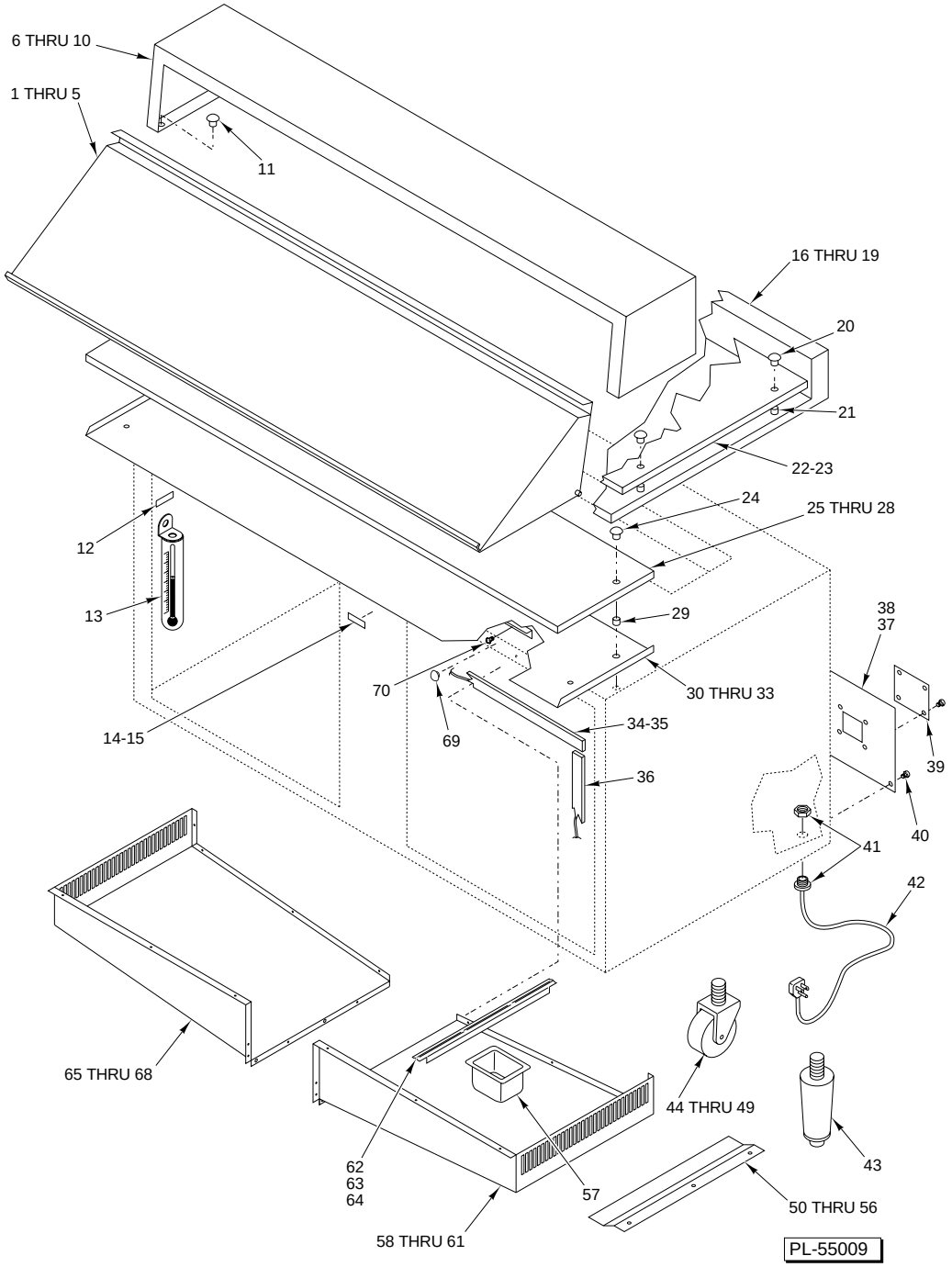

PANS - COVER/CUTTING BOARD

ILLUS. PL-55009	PART NO.	NAME OF PART	AMT.
1	00-433722-00002	Cover - 3 Row (CUS48) (CUS60) (18 Pan)	1
2	00-433722-00003	Cover - 3 Row (CUS60) (24 Pan)	1
3	00-433722-00005	Cover - 2 Row (CUS48) (10 Pan) (CUS48) (CUS60) (12 Pan)	1
4	00-433722-00007	Cover - 2 Row (CUS60) (10 Pan)	1
5	00-433722-00008	Cover - 2 Row (CUS48) (CUS60) (8 Pan)	1
6	00-433648-00002	Shelf - 3 Row (CUS48) (CUS60) 18 Pan)	1
7	00-433648-00003	Shelf - 3 Row (CUS60) (24 Pan)	1

PANS - COVER/CUTTING BOARD (CON'T.)

ILLUS. PL-55009	PART NO.	NAME OF PART	AMT.
8	00-433648-00005	Shelf - 2 Row (CUS48) (10 pan) (CUS48) (CUS60) (12 Pan)	1
9	00-433648-00008	Shelf - 2 Row (CUS48) (CUS60) (8 Pan)	
10	00-433648-00007	Shelf - 2 Row (CUS60) (10 Pan)	1
11	01-030235	Pin - Threaded Guide	4
12	00-432903	Operator Temp Label	1
13	00-430037	Thermometer	1
14	00-433592	Refrigerator Label	1
15	00-433593	Frozen Food Label	1
16	00-433841	Heavy Duty Top - Splashback Assy (W/Cutting Board) (CU48) (CUF48)	1
17	00-433842	Heavy Duty Top - Splashback Assy (W/Cutting Board) (CU60) (CUF60)	1
18	00-433849	Heavy Duty Top - Splashback Assy (W/O Cutting Board) (CU48) (CUF48)	1
19	00-433850	Heavy Duty Top - Splashback Assy (W/O Cutting Board) (CU60) (CUF60)	1
20	01-030235	Pin - Threaded Guide	4
21	00-265780-00009	Insert - 5/16 - 18 UNC	4
22	00-433687-00008	Full Cutting Board (CU48) (CUF48)	1
23	00-433687-00009	Full Cutting Board (CU60) (CUF60)	1
24	01-030235	Pin - Threaded Guide	3
25	00-433687-00002	Board - Cutting 8 x 48 (CUS48)	1
26	00-433687-00003	Board - Cutting 8 x 60 (CUS60)	1
27	00-433687-00005	Board - Cutting 12 x 48 (CUS48)	1
28	00-433687-00006	Board - Cutting 12 x 60 (CUS60)	1
29	00-265780-00009	Insert - 5/16 - 18 UNC	3
30	00-434132	Support - Board 3 Row (CUS48)	1
31	00-434134	Support - Board 3 Row (CUS60)	1
32	00-434133	Support - Board 2 Row (CUS48)	1
33	00-434135	Support - Board 2 Row (CUS60)	1
34	00-433783-00002	Molding - Seal Horizontal (CU60) (CUF60) (CUS60)	4
35	00-433783-00003	Molding - Seal Horizontal (CU48) (CUF48) (CUS48)	4
36	00-433783-00001	Molding-Seal Vertical	4
37	00-433925	Lower Back - Cover (CU48) (CUF48) (CUS48)	1
38	00-433926	Lower Back - Cover (CU60) (CUF60) (CUS60)	1
39	00-433924	Cover - Access Hole (CUF48) (CUF60)	1
40	SD-008-40	Self-Tapping Screw 8-18 x 3/8 Phil. Truss Hd., Type B	AR
41	FE-022-84	Connector - Strain Relief	1
42	00-239000	Cord 115 V., 15A Service	1
43	01-030347	Leg	4
44	00-282559-00001	Caster W/Brake (3")	AR
45	00-282559-00002	Caster W/O Brake (3")	AR
46	00-284185-00013	Caster W/Brake (2½")	AR
47	00-284185-00014	Caster W/O Brake (2½")	AR
48	00-430415-00001	Caster W/Brake (5")	AR
49	00-430415-00002	Caster W/O Brake (5")	AR
50	00-433742-00002	Pan - Support Sides 2 Row (CUS48) (CUS60) (8, 10, 12 Pan)	1
51	00-433742-00004	Pan - Support Sides 3 Row (CUS48) (CUS60) (18 & 24 Pan)	1
52	00-433742-00005	Pan - Support Trans 2 Row (CUS48) (CUS60) (8 Pan)	1
53	00-433742-00006	Pan - Support Trans 2 Row (CUS48) (CUS60) (10 Pan)	1
54	00-433742-00007	Pan - Support Trans 2 Row (CUS48) (CUS60) (12 Pan)	1
55	00-433742-00008	Pan - Support Trans 2 Row (CUS48) (CUS60) (18 Pan)	1
56	00-433742-00009	Pan - Support Trans 2 Row (CUS60) (24 Pan)	1
57	00-269971-00001	Pan - 1/6 x 4 Cambro	AR
58	00-434041-00002	Duct - (Right) (CUS48) (8, 10 & 12 Pan)	1
59	00-434042-00002	Duct - (Right) (CUS48) (18 Pan)	1
60	00-434043-00002	Duct - (Right) (CUS60) (8, 10, 12 Pan)	1
61	00-434044-00002	Duct - (Right) (CUS60) (18 & 24 Pan)	1
62	00-269970-00001	Divider (12 Lg.)	AR
63	00-269970-00002	Divider (20 Lg)	AR
64	00-433946	Divider 1 3/8" Wide (CUS48) (18 Pan) (CUS60) (18 & 24 Pan)	1
65	00-434041-00001	Duct - (Left) (CUS48) (8, 10 & 12 Pan)	1
66	00-434042-00001	Duct - (Left) (CUS48) (18 Pan)	1
67	00-434043-00001	Duct - (Left) (CUS60) (8, 10 & 12 Pan)	1
68	00-434044-00001	Duct - (Left) (CUS60) (18 & 24 Pan)	1
69	00-239309-00007	Plug - Canoe Clip Hole	AR
70	SD-015-25	Self-Tapping Screw ¼-20 x 5/8 Hex Washer Hd., Type TT	5

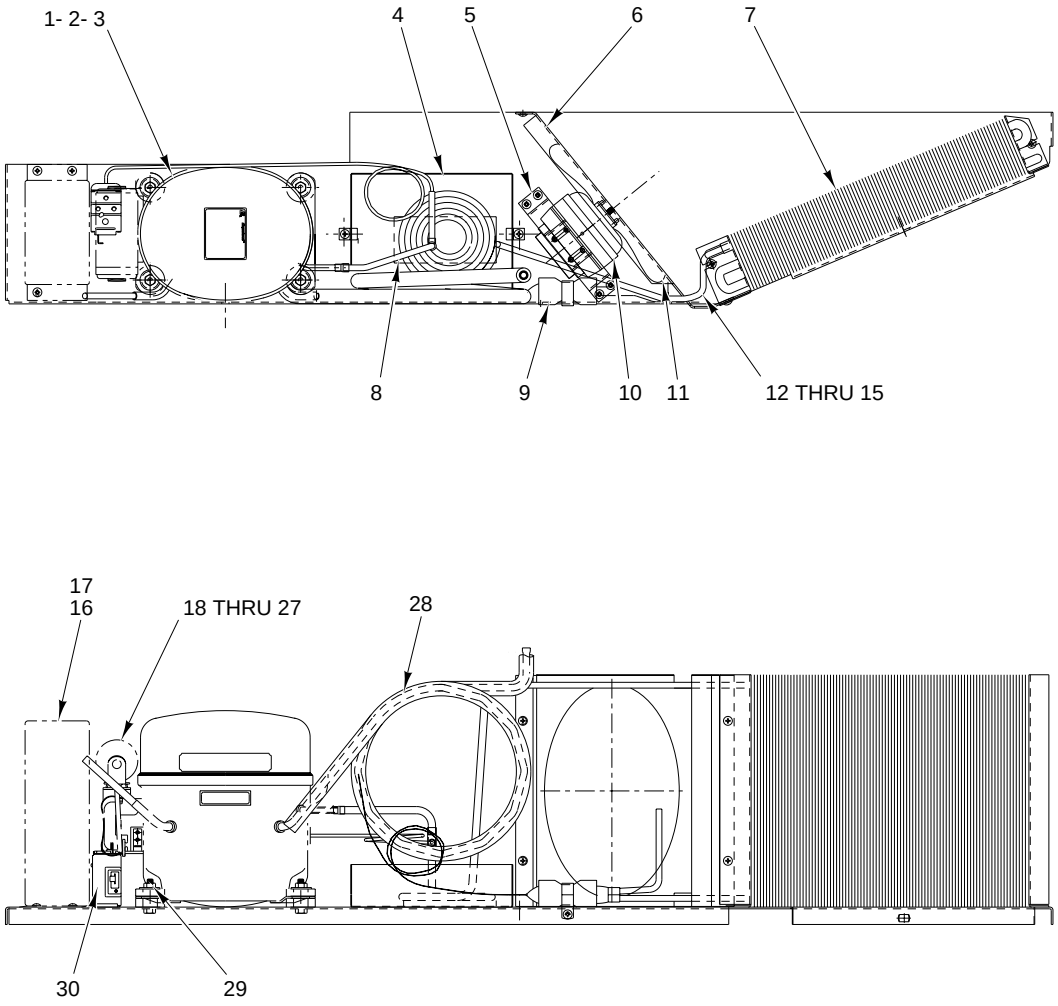

PL-55010

CONDENSOR ASSEMBLY

CONDENSOR ASSEMBLY

ILLUS. PL-55010	PART NO.	NAME OF PART	AMT.
1	00-433899-00001	Compressor (CU/CUS48 & 60)(Incls. Items 25 & 29) (Copeland AR27C1E-IAA-201)(¼ HP) (Compressor Only)	1
2	01-013605	Compressor (CU/CUS48 & 60)(Incls. Items 25 & 29) (Copeland AR18C1E-IAA-201)(⅓ HP) (Compressor Only)	1
3	01-013604	Compressor(CU/CUS48 & 60)(Incls. Items 25 & 29) (Copeland AR22C1E-IAA-201)(½ HP) (Compressor Only)	1
4	00-433663	Pan-Condensate	1
5	00-433877	Bracket - Fan Motor	1
6	00-433949	Shroud & Fan Cover	1
7	00-433867	Coil & Condensor (CU48/60)	1
8	00-268160	Pad-Dish	1
9	00-433711-00001	Drier - Core Assy.	1
10	00-267074-00001	Motor - Evaporator 115 V.	1
11	00-265773-00001	Blade - Fan (9")	1
12	00-434000	Tube - Discharge (Comp. To Tee) (CU48) (CUS48) (CU60)	1
13	00-433996	Tube - Discharge (Cond. To Tee)	1
14	00-434001	Tube - Discharge (Comp. To Tee) (CUF48)	1
15	00-434015	Tube - Discharge (Comp. To Tee) (CUF60)	1
16	00-433606-00005	Capacitor - Compressor Start (CUF60)	1
17	00-433608-00006	Relay - Compessor (CUF60)	1
18	00-433606-00006	Capacitor - Compressor Start (CU48) (CUS48) (CU60) (CUS60)	1
19	00-433606	Capacitor - Compressor Start (CUF48)	1
20	00-433608-00007	Relay - Compressor (CU48) (CUS48) (CU60) (CUS60)	1
21	00-433608-00005	Relay - Compressor (CUF48)	1
22	00-433692-00007	Protector - Compressor Overload (CU48) (CUS48) (CU60) (CUS60)	1
23	00-433692-00005	Protector - Compressor Overload (CUF48)	1
24	00-433692-00006	Protector - Compressor Overload (CUF60)	1
25	00-433603-00007	Compressor Service Components (CU/CUS 48 & 60) (Incls. Items 18, 20 & 22)	1
26	00-433603-00005	Compressor Service Components (CUF48) (Incls. Items 19, 21 & 23)	1
27	00-433603-00006	Compressor Service Components (CUF60) (Incls. Items 16, 17 & 24)	1
28	00-548126	Tube-⅜ Closed Cell (Rubatex)	AR
29	00-433696-00001	Compressor Mounting Parts (Incls. 4 Grommets & 4 Sleeves)	1
30	00-281878	Control - Dual Pressure (CUF48) (CUF60)	1
	00-434114-00001	Catch - Latch Gate	1

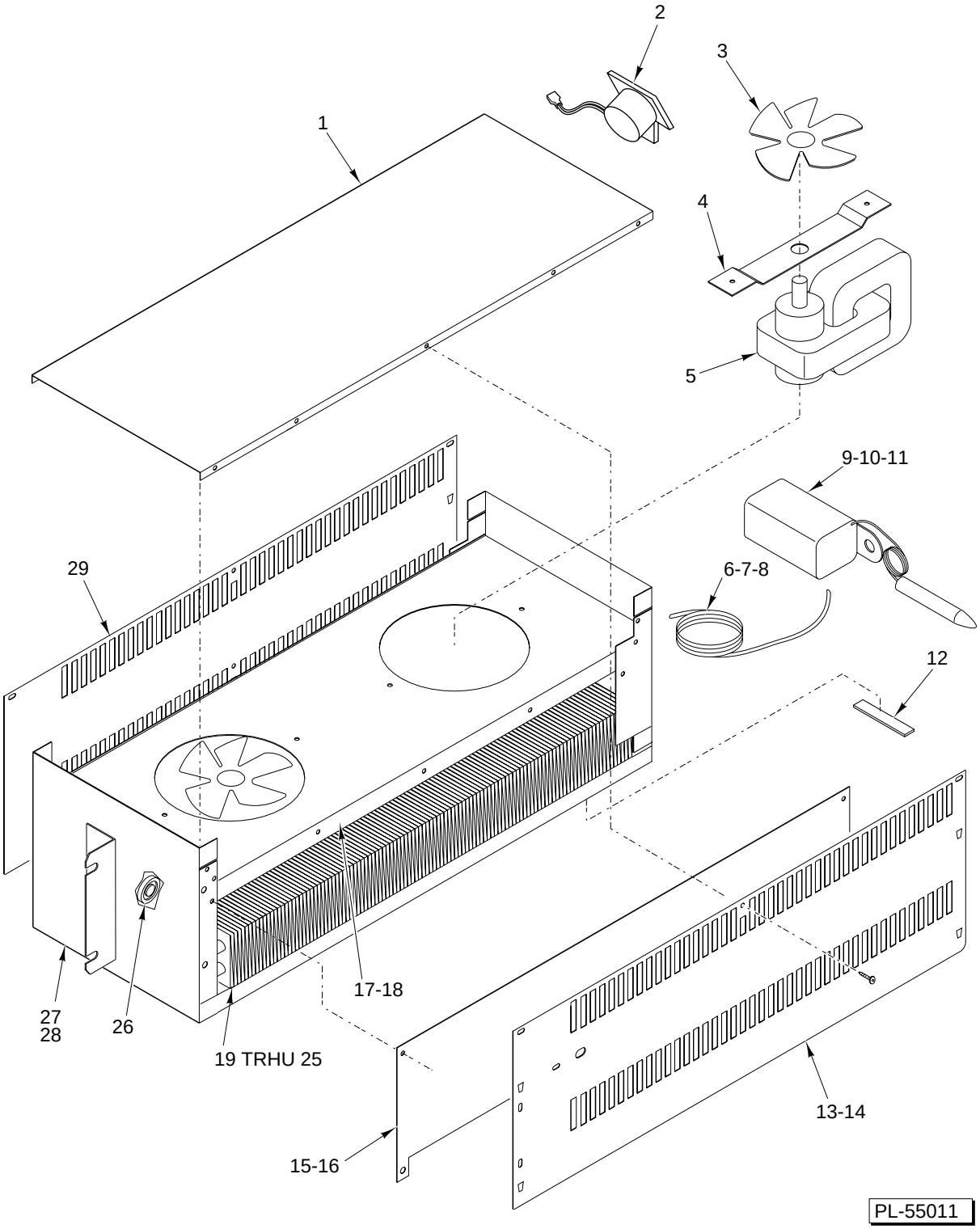

EVAPORATOR UNIT

EVAPORATOR UNIT

ILLUS. PL-55011	PART NO.	NAME OF PART	AMT.
1	00-433980	Cover - Evaporator Top	1
2	00-269122	Thermostat - Safety (CUF48 & CUF60)	1
3	00-433090	Blade - Evaporator Fan	AR
4	00-279994	Fan Bracket Assy.	AR
5	00-430061-00002	Motor-Evaporator Fan	AR
6	00-267222-00004	Capillary Tube (CU60, CUF60, & CUS60)	1
7	00-267222-00012	Capillary Tube (CUF48)	1
8	00-267222-00001	Capillary Tube (CU48 & CUS48)	1
9	00-433598	Thermostat (CU48 & CU60)	1
10	00-433599	Thermostat (CUF48 & CUF60)	1
11	00-433827	Thermostat (CUS48 & CUS60)	1
12	00-548126	Tube-⅜ Closed Cell (Rubatex)	AR
13	00-433979-00003	Side - Evaporator (RH) (CU48, CUS48, CU60, & CUS60)	1
14	00-433979-00002	Side - Evaporator Housing (RH) (CUF48 & CUF60)	1
15	00-434106-00001	Baffle - Evaporator (Left) (CU, CUS, & CUF)	1
16	00-434106-00002	Baffle - Evaporator (Right) (CU, CUS, & CUF)	1
17	00-433981	Panel - Evaporator Fan (CU48, CUF48, CU60, & CUF60)	1
18	00-433982	Panel - Evaporator Fan (CUS48 & CUS60)	1
19	00-239079	Heater - Defrost Coil (CUF48 & CUF60)	1
20	00-269240	Heater - Defrost Pan (CUF48 & CUF60)	1
21	00-262708	Accumulator (CUF48 & CUF60)	1
22	00-262575-0000A	Coil - Evaporator	1
23	00-261475	Spring (CUS48, CUF48, CUS60, & CUF60)	2
24	FE-014-13	Bushing (CUS48, CUS60, & CUF60)	1
25	00-239226	Sleeve (CUS48, CUF48, CUS60, CUF60)	1
26	00-280599	Defrost Timer (CUF48 & CUF60)	1
27	00-433937-00001	Frame - Evaporator Assy. Support (CUS48/60)	1
28	00-433937-00002	Frame - Evaporator Assy. Support (CUF48/60)	1
29	00-433979-00001	Side - Evaporator Housing (LH) (All Models)	1

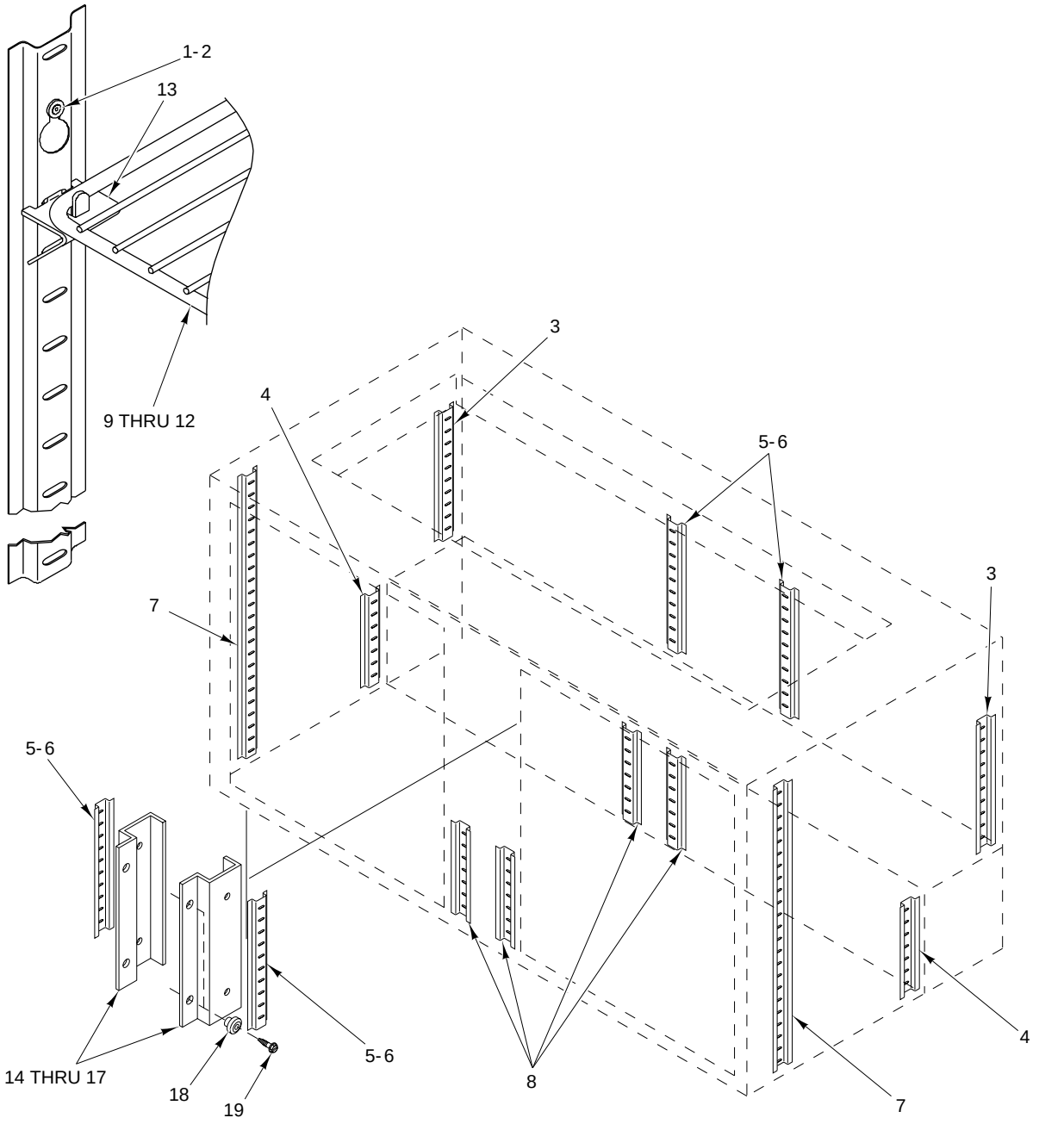

PILASTER - SHELVES

PILASTER - SHELVES

ILLUS. PL-55012	PART NO.	NAME OF PART	AMT.
1	00-433673	Support-Keyhole	AR
2	RS-030-17	Rivet-Pop (⅛ x 3⁄16 Lg.,Alum)	AR
3	00-434724-00002	Pilaster - Keyhole Shelf (12" LG.)	2
4	00-434724-00003	Pilaster - Keyhole Shelf (9" LG.)	2
5	00-434724-00002	Pilaster - Keyhole Shelf (12" LG.) (CU48, CUF48, CU60 & CUF60)	4
6	00-434724-00005	Pilaster - Keyhole Shelf (6⅞" LG.) (CUS48 & CUS60)	4
7	00-434724-00001	Pilaster - Keyhole Shelf (22½" LG.)	2
8	00-434724-00003	Pilaster - Keyhole Shelf (9" LG.)	4
9	01-019020	Shelf - Lower (CU60, CUF60 & CUS60) (27¾ x 15⅜)	2
10	01-019021	Shelf - Upper (CU60, CUF60 & CUS60) (22⅝ x 23½)	2
11	01-019022	Shelf - Upper (CU48, CUF48 & CUS48) (17¾ x 23½)	2
12	01-019023	Shelf - Lower (CU48, CUF48 & CUS48) (21¾ x 15⅜)	2
13	00-433661	Support - Shelf (Snap-In Clip)	AR
14	00-434096	Support - Pilaster (CU48, CUF48)	2
15	00-434097	Support - Pilaster (CUS48)	2
16	00-434048	Support - Pilaster (CU60 & CUF60)	2
17	00-434049	Support - Pilaster (CUS60)	2
18	00-265780-00001	Insert - Avdel	AR
19	SA-021-09	Screw Assy. 10-32 x ½ Ext. Washer Hex Hd.	AR