66-4026-1 & 2 (10-80)

DIMENSION II

Solid-State Control pop-up bread toasters

HOBART

FOOD EQUIPMENT

ET12 - 2-slice w/cordset
ET24 - 4-slice
ET25 - 4-slice w/cordset
ET242 - 8-slice (2 ET24's w/1-tier stand)
ET244 - 16-slice (4 ET24's w/2-tiered stands)

Installation & Owner's Manual

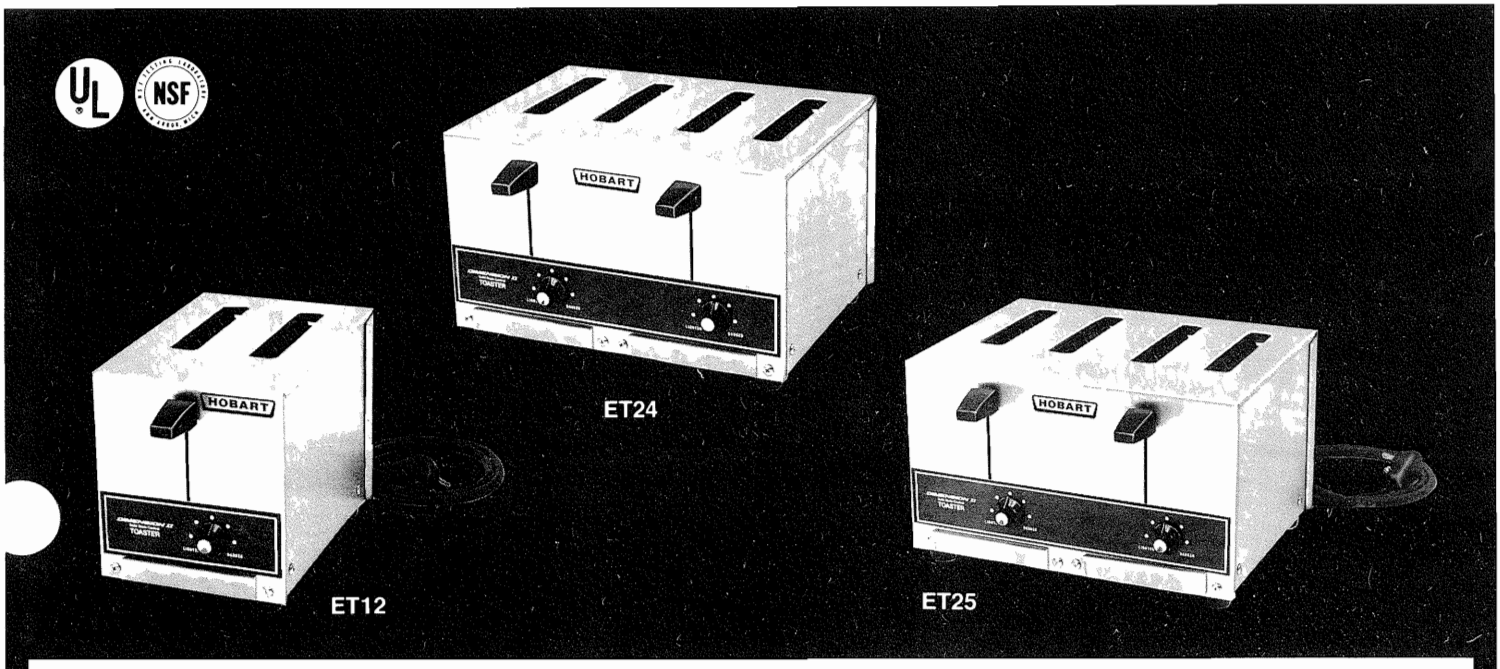

for higher reliability, high production & consistency

INSTALLATION INSTRUCTIONS

GENERAL & DIMENSIONAL DATA

MODEL	DESCRIPTION	TOASTER OUTPUT (SLICES/HOUR)			BODY DIMENSIONS						SLOT WIDTH OPENINGS		APPROX. WEIGHTS			
					W		D (Excluding knobs)		H				SHIP		NET	
		LIGHT	MED.	DARK	IN.	MM	IN.	MM	IN.	MM	IN.	CM.	LBS.	KILOS	LBS.	KILOS
ET12	2-slice bread w/cordset	265	190	125	6.62	168	11.59	294	7.75	197	.69	1.75	12	5.5	9	4
ET24	4-slice bread	530	380	250	12.56	319	11.67	294	7.75	197	.69	1.75	18	8.2	15	7
ET25	4-slice bread w/cordset	530	380	250	12.56	319	11.67	294	7.75	197	.69	1.75	18	8.2	15	7
ET242	8-slice bread (2 ET24's with 1 tiered stand)	1060	760	500	12.56	319	24.04	610	15.38	391	.69	1.75	46	21	34	15.5
ET244	16-slice bread (4 ET24's with 2 tiered stands)	2120	1520	1000	25.25	641	24.04	610	15.38	394	.69	1.75	92	42	68	31

TOASTER CORDSET GUIDE

TOASTER MODEL AND VOLTAGE	CORDSET MODEL AND PLUG CONFIGURATION	TOASTER MODEL AND VOLTAGE	CORDSET MODEL AND PLUG CONFIGURATION
ET12 120V 2-pole/3-wire	**CX323 (Furnished std.)** NEMA 5-15P GE 4363-5 Hubbell 5264 4' long	**ET24** 120/208V 120/240V 3-pole/4-wire **ET25**	**CX303 (Accessory)** NEMA 14-20P Hubbell 8411 4' long **CX303 (Furnished std.)**
ET12, ET25 208V or 240V 2-pole/3-wire **ET24**	**CX273 (Furnished std.)** NEMA 6-15P GE 4366-5 Hubbell 5664 **CX273 (Accessory)** 4' long	**ET24** 120V 2-pole/3-wire	**CX302 (Accessory)** NEMA 5-30P Hubbell 9309 3' long

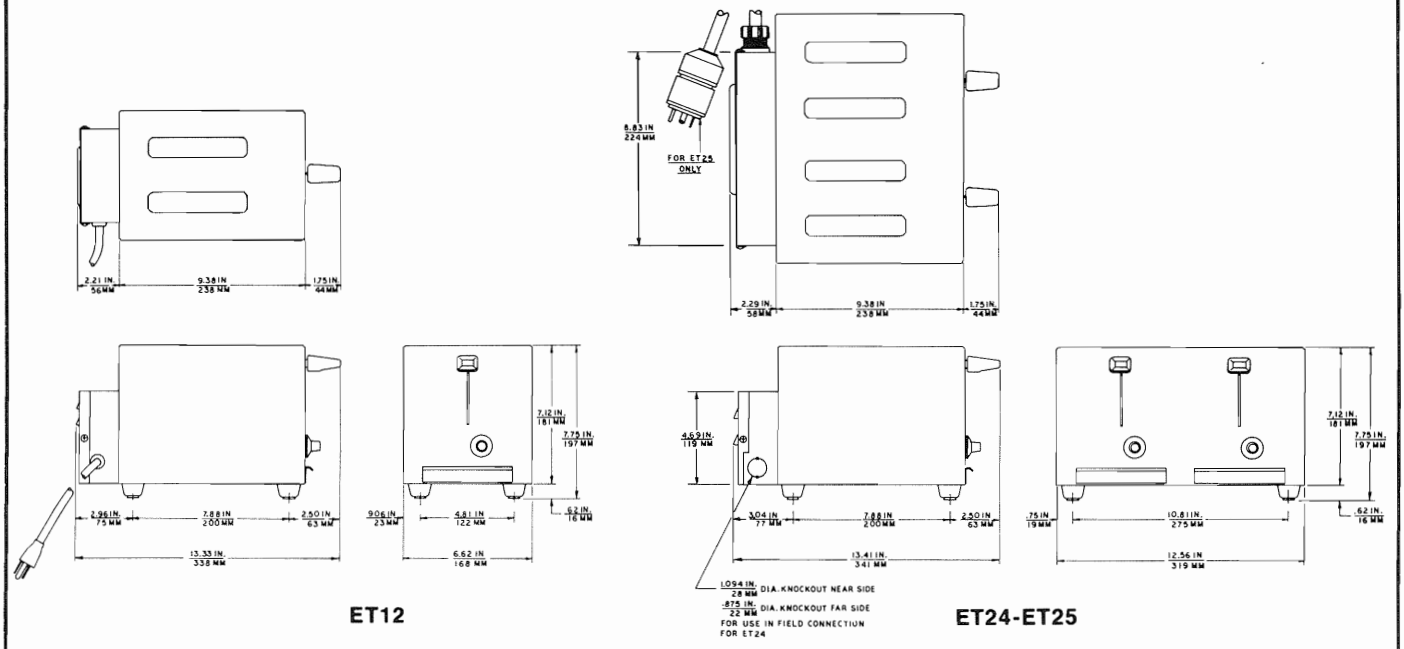

ET12 **ET24-ET25**

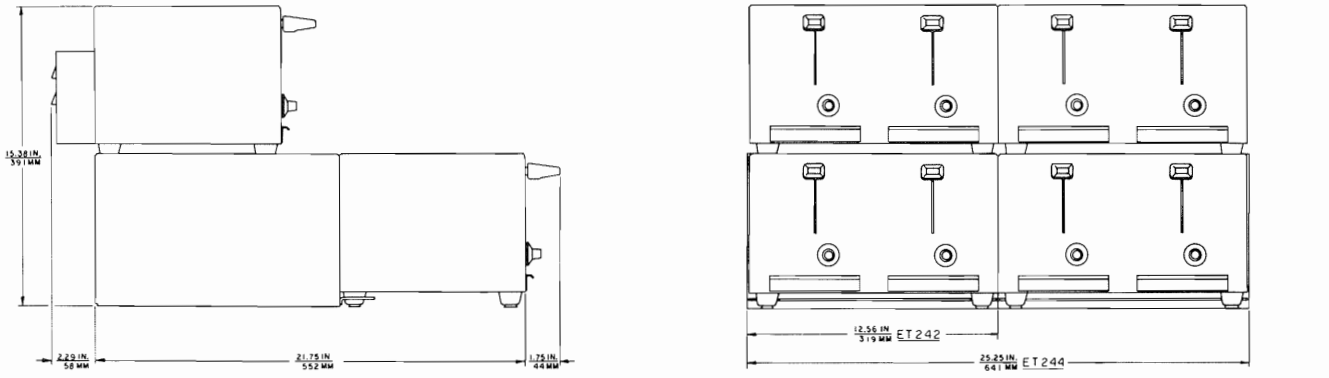

ET242-ET244 **ET242-ET244**

MAKING ELECTRICAL CONNECTIONS

ELECTRICAL DATA (50 OR 60 HZ.)

MODEL	KW RATING	NOMINAL AMPS PER LINE WIRE			
		120/208V-120/240V	120V	208V	240V
		SINGLE PHASE			
ET12	1.4	—	11.7	6.7	5.8
ET24	2.8	11.7 (23.3)*	23.3	13.5	11.7
ET25	2.8	11.7 (23.3)*	N.A.	13.5	11.7
ET242	5.6	SEE AMP. LOADINGS FOR INDIVIDUAL ET24's			
ET244	11.2				

*For most four-slice bread toaster installations, the ET24 (or ET25) 3-pole 4-wire 120/208, 120/240 volt unit will be used. Units will operate on 120/208V or 120/240V 3-pole. ET24 can be operated on 120V, 2-pole by use of a jumper supplied with device. Specify voltage when ordering.

TWO-SLICE (ET12) INSTALLATION

■ AVAILABLE MODELS

This toaster is made in **three distinct** models, one for each of the following voltages:

1. 120 volt AC — 2-pole single phase
2. 208 volt AC — 2-pole single phase
3. 240 volt AC — 2-pole single phase

■ LOAD

The connected load of the **ET12** toaster is 1400 watts. Unit should be connected to a circuit that can handle this load. (A standard 120 volt line circuit is usually rated at 15 AMPS and will handle up to 1800 watts total load).

■ POWER CONNECTIONS

Check the nameplate of the Toaster to make sure that its voltage rating agrees with the voltage of the available power source.

The **120 volt** toaster comes with a 4-foot grounding type cordset attached to the device from the factory. The cord cap has 2 parallel prongs and a round prong linked to the toaster frame and providing electrical grounding.

The 208 volt and the 240 volt toasters also feature an attached cordset. All cordsets can be removed so that any other electrical wiring that may be preferred can be attached to the toaster at the terminal box located in the rear. Suitable knockouts are provided on the terminal box and the electrical connections are made to the terminal board located inside the box shown in the accompanying sketch.

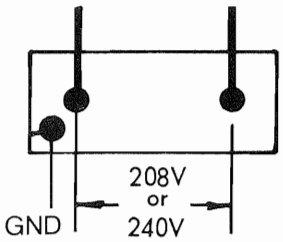

FOUR-SLICE (ET24, ET25) INSTALLATION

■ AVAILABLE MODELS

The 4-slice bread toaster is made in **three distinct** models. One for each of the following voltages:

1. 120 volt AC — 2-pole single phase (**ET24** only)
   120/208 volt AC — 3-pole single phase
   120/240 volt AC — 3-pole single phase
2. 208 volt AC — 2-pole single phase
3. 240 volt AC — 2-pole single phase

■ LOAD

The connected load of the 4-slice toaster is 2800 watts, made up of two 2-slice modules independent of each other, each having a rated load of 1400 watts. The circuit to which the 4-slice toaster is connected should have sufficient capacity to handle the 2800 watts.

■ POWER CONNECTIONS

Check the nameplate of the Toaster to make sure that its voltage rating and wiring agrees with the voltage of the available power source.

Model ET25 — This model toaster comes with attached cordset for the following voltages: 120/208V or 120/240V AC, 3-pole, single phase; 208V AC 2-pole, single phase and 240V AC 2-pole, single phase. (There is no attached cordset for 120V AC 2-pole, single phase although an accessory cordset for this voltage, Model CX302, is available for field attachment to Model **ET24**). The plug on this toaster needs to be plugged into a receptacle with a matching prong configuration.

Model ET24 — It has a terminal box in the back with suitable knockouts and a cover plate that is kept in place with screws.

THREE-POLE SINGLE PHASE POWER SYSTEMS

Inside the box there is a 3-terminal, terminal board. For 3-pole single phase power systems the connections to the toaster are as follows:

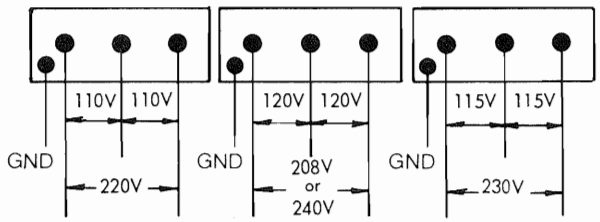

If **2-pole connections** are to be used from these three pole systems, then a jumper must be used between the outside terminals in the toaster terminal box as shown: (The jumper is taped at the outside top of the terminal box should it be required).

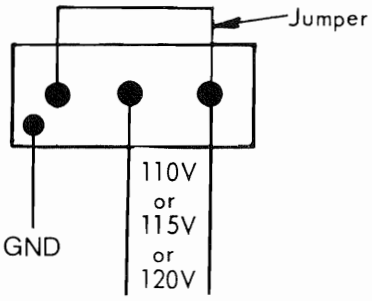

CAUTION: A three-pole toaster 120/208 V or 120/240V cannot be connected to a 2-pole 208V or 240V, 2-pole single phase system.

TWO-POLE SINGLE PHASE POWER SYSTEMS

Two-wire single phase power systems can be connected to the Model **ET24** 4-slice toaster as shown below. For such connections, a different model toaster (than the 3-pole model) is used - one that has a 2-pole, terminal board.

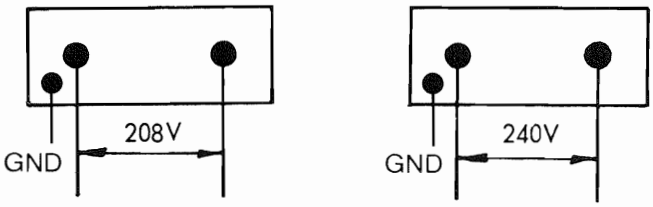

BANKED, TIERED (ET242, ET244) INSTALLATION

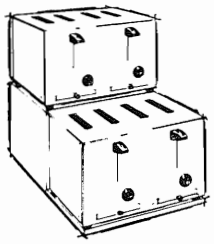

MODEL ET242 consists of two **ET24** 4-slice toasters placed on a stand Model No. CX215.

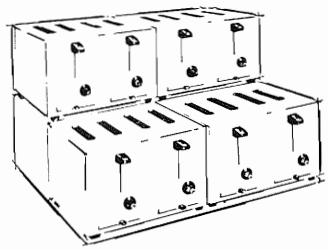

MODEL ET244 is two **ET242** models placed next to each other.

INTERNAL CONNECTIONS - ET12, ET24/25

Unlike other toaster makes on the market, internal wiring changes (beyond the terminal box) cannot be made to make possible toaster operation at voltages other than those for which the toaster is wired.

The reason for this is that the Hobart toaster has solid state control. This design approach has a distinct advantage. The Hobart toaster automatically adjusts toasting time to compensate for ambient temperature and voltage fluctuations. In other words, it automatically compensates for voltage changes so that it is not necessary to change heating elements to do this.

GROUNDING - ALL MODELS

Model **ET25** Toaster is grounded at the factory. For other models, grounding can be accomplished by connecting a separate wire from the grounding screw in the terminal box to a suitable ground or ground lead of a grounding type cordset.

Probably, the easiest way to ground the toaster (any model) is to provide an extra wire with the cord that is needed for power - for a 2-pole supply, a 3-wire cord should be provided; for a 3-pole supply a 4-wire cord is needed. The "extra" wire of the cord can then be connected to the grounding screw in the toaster terminal box. The "extra" terminal in the receptacle can be grounded in accordance with applicable codes.

Solid-State . . . so simple it's more reliable!

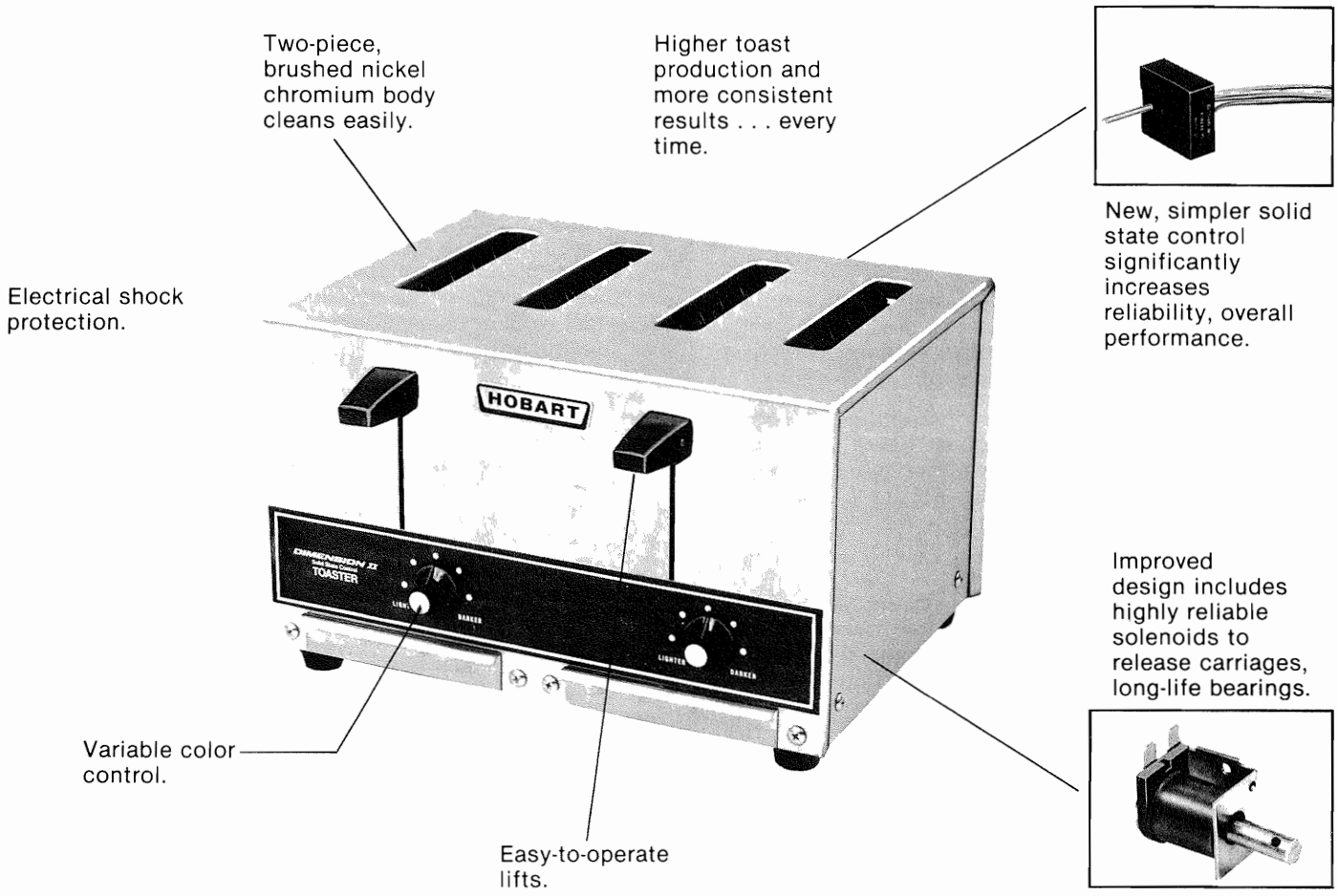

a host of convenience features

HIGH RELIABILITY- innovative Dimension II Solid-State Toaster Control is simpler than mechanical and electromechanical controls. It has no springs or other moving parts to wear out. It requires no calibration and is protected against corrosive contaminants. It has been proven in a year of accelerated laboratory and field tests simulating years of commercial use. Improved, more reliable design includes long-life solenoids and bearings.

HIGHEST PRODUCTION- faster preheat contributes to eight percent higher production than previous Hobart models and the highest of any pop-ups.* Up to 190 medium slices (**ET12**) and 380 medium slices (**ET24, ET25**) hourly.

ENERGY EFFICIENT- the highest production per KW of any pop-up.* Uses energy only when needed, unlike rotary toasters.

UNMATCHED CONSISTENCY- toasting perfection every time since solid state control inherently retains its original design accuracy. Automatically adjusts toasting time to compensate for ambient temperature and voltage fluctuations.

EASY SERVICING- new two-piece body removes easily for fast service.

EASY TO OPERATE- lift levers take less than four pounds of force to operate. Act as cycle interrupts. No need for separate controls.

EASY TO CLEAN- brushed nickel chromium exterior hides finger prints . . . cleans easily.

SHOCK PROTECTION- with bottom crumb tray cover, double-pole main switch.

*Based on current published ratings

OPERATING YOUR TOASTER

Your Toaster is a very simple device to operate. The instructions are the same for the 2- and 4-slice toasters.

■ TOASTING

Once the toaster is connected to a power source, it is energized to toast the bread placed in the slots, by pressing down on the lever as far as it goes. The lever goes down quite easily - it is not necessary to pound on it. The carriage mechanism locks in that position and the current starts to flow in the heaters, bringing their color to a cherry red. When the bread is toasted to the desired doneness the toaster will automatically release the carriage mechanism which will rise exposing the product placed in it. At the same time, the current flow into the heaters will be disrupted. Each lever controls two slots simultaneously.

■ TOASTING INTERRUPT

If for some reason it is desired to interrupt the toasting operation, this can be done by merely pushing up lightly on the carriage lever. The carriage-locking mechanism is released and the toast will then pop up.

It is important to note that after interrupting the toaster cycle, the toaster will go through its entire cycle upon re-cycling which could result in burning the toast. It will not just complete the unfinished portion of the interrupted toasting cycle.

■ COLOR CONTROL

One color control knob is located on the front of the toaster for every two slots. The knob can move from one to the other of two extreme positions labeled LIGHTER-DARKER. When set at the LIGHTER position, the toast produced is almost crisp white, while when set at the DARKER position, the toast comes out dark brown. The numerous in-between positions produce varying shades of doneness or brownness between the two extremes. This color range of toast has been established for commercial toasting usage using one-day-old pullman size loaf bread. It will perform superbly with all normally encountered types of bread. A few trial runs at different settings will familiarize you with the toast color produced at those settings.

At a given setting, the toaster will produce slice after slice within acceptable limits of the same color toast because of the solid state control's automatic adjustment of toasting time for ambient temperature and voltage fluctuations and because solid state control retains its designed accuracy.
Do not attempt to "force" the color control knob as you may damage the unit.

■ TOAST WILL NOT POP UP

On occasion when warped bread is used or forced into the slot, the carriage mechanism will be held down at the end of the toasting cycle. To begin with, the use of such bread should be avoided. But if a jam occurs -

a) Disconnect the Toaster from the electrical source.

b) Permit the Toaster to cool sufficiently so that the stuck product can be removed with the fingers.

c) If the product cannot be removed with the fingers or if there is a need to use the toaster immediately and there is no time to permit it to cool down, then a rounded rod or other slender object can be carefully used to prod the bread out avoiding contact with the heating units and damage to them.

CAUTION: SHORTED OUT HEATING UNITS DAMAGED BY CARELESS POKING INTO THE SLOT ARE NOT COVERED BY THE WARRANTY.

TAKING CARE OF YOUR TOASTER

■ CLEANING

The handsome satin-finished, chrome-plated steel of the toaster exterior is very easy to keep clean. A detergent soaked damp cloth followed with a clear rinse damp cloth, applied daily will keep the finish appealing for years.

From time to time, it may be necessary to remove accumulations such as grease from the surface. A detergent solution and nylon cleaning pad can be used. The surface can then be wiped clean with a clear rinse damp cloth. Reasonable care should be exercised to avoid spillage in the openings and on the controls. No steel wool or cleanser should be used since it will mar the finish.

■ CRUMB TRAYS

The crumb trays can be removed, emptied and washed by merely pulling them out past the slight holding position of a spring clip. Replacing them is equally easy. Crumb trays must be replaced after cleaning. The crumb accumulation, if any, on the bottom cover can be usually removed by shaking the toaster after disconnecting the cord. Extremely dirty accumulation can be removed from the bottom cover by removing the rubber feet, screws in the plastic legs and removing the bottom cover which can then be washed. A screw driver is needed to remove the screws. Proper replacement of the bottom can be made with the bottom cutouts matching those of the crumb trays. Bottom removal and replacement should be preceded by disconnecting the cord or power to the toaster.

■ HEATING UNITS

It is possible to have a condition where the toast is not released when the end of the toasting cycle is complete. This usually happens when the product is not flat and is forced into the slot. (Warped product should not be used). To retrieve the product, many people grab the first object available, like a fork or knife and poke it into the slot. Quite often the result is a ruined heating element. (Shorted heating units are not warranted if caused by the insertion of the slot of objects). **If material must be removed by prodding into the slot then it should be done most carefully.** Refer to the paragraph titled **TOAST WILL NOT POP UP.**

IF SERVICE IS NEEDED ON YOUR TOASTER

Although your toaster is a rugged commercial type device on occasion it is reasonable to expect that in the course of its life, some servicing will be required.

To locate the closest service station to your operation, refer to the Product Service Guide included with your toaster. These service stations have subcontracted others that may be still closer to you. So contact them, or your dealer to obtain precise information on the closest servicing station to you.

NOTE: Refer to the conditions of your warranty. Your toaster is guaranteed for one year against any defect in material and labor. However, all repairs must be made, transportation charges prepaid, both ways, at an authorized service station.

ACCESSORIES

CX215 Stand for two 4-slice units

CX369 Receptacle for CX273 cordset;
2-pole, 3-wire, 15-amp. NEMA #6 - 15R

CX370 Receptacle for CX303 cordset;
3-pole, 4-wire, 20-amp. NEMA #14-20R

As continued product improvement is a policy of Hobart Chicago Heights, Inc., specifications may be changed without notice.



HOBART CHICAGO HEIGHTS, INC.
14th & Arnold Streets · Chicago Heights, Illinois 60411
A SUBSIDIARY OF HOBART CORPORATION

66-4026-1 & 2 (10-80)

PRINTED IN U.S.A.