HOBART

CATALOG OF REPLACEMENT PARTS

HALF-SIZE CONVECTION OVENS

CN85
CN85K

List of Models & Factory Numbers on back page.

A product of HOBART CORPORATION TROY, OHIO 45374

FORM 15550 (8-85)

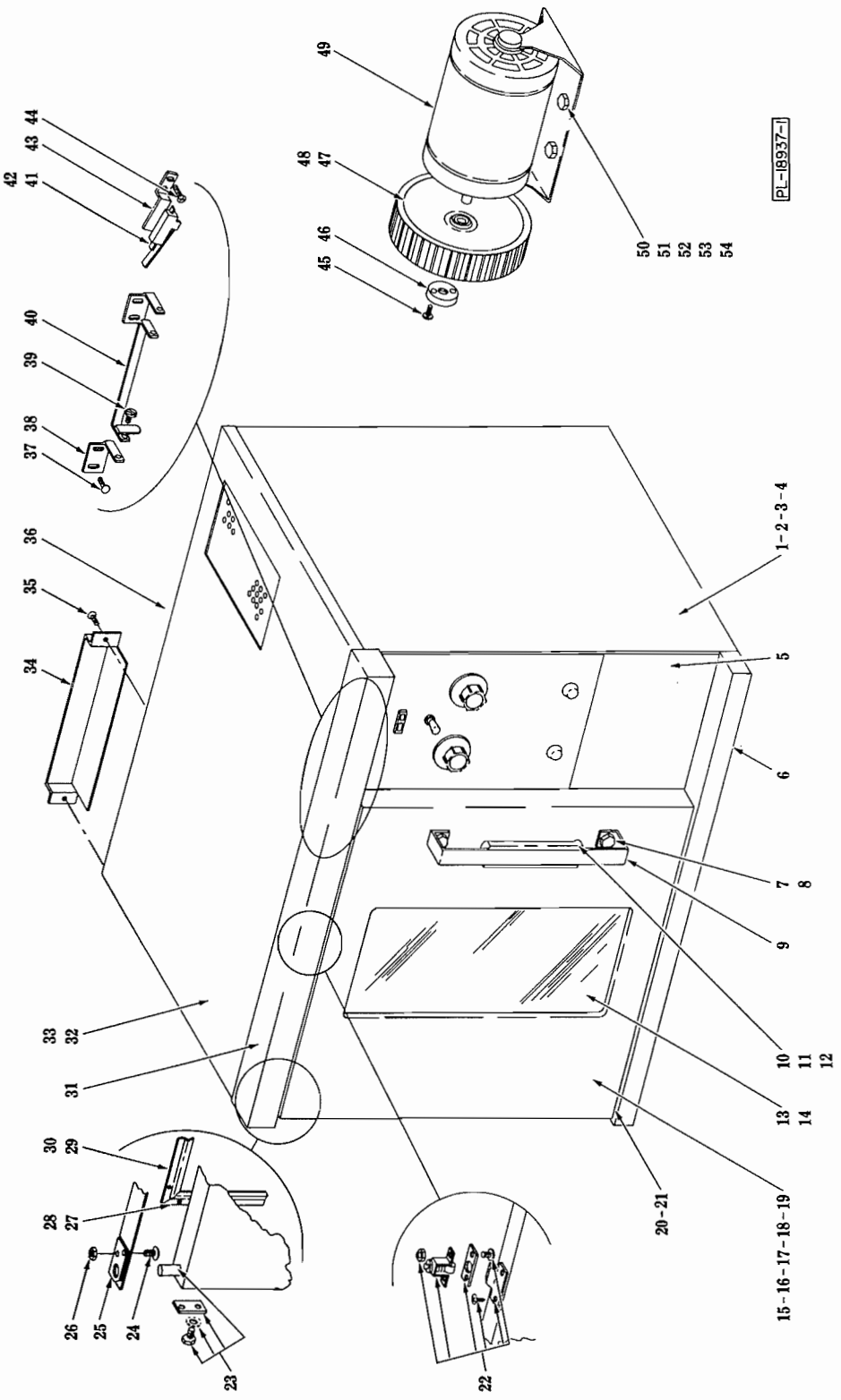

CABINET AND DOORS

CABINET AND DOORS

ILLUS. PL-18937-1	PART NO.	NAME OF PARTS	AMT.
1	347594-1	Side Panel - R.H. (Painted)	1
2	347594-3	Side Panel - R.H. (SST)	1
3	347594-2	Side Panel - L.H. (Painted)	1
4	347594-4	Side Panel - L.H. (SST)	1
5	347538-1	Lower Panel	1
6	347517-1	Lower Cover	1
7	SC-113-80	Cap Screw ¼-20 x ½ Hex Hd	2
8	WL-19-22	Lock Washer ¼ Ext. Shakeproof	2
9	347608-1	Handle & Weld Nuts	1
10	347711-1	Grip - Door Handle	1
11	SC-114-10	Mach. Screw 8-32 x ¼ Phil. Pan Hd	2
12	WS-29-45	Washer	2
13	342129-1	Window	1
14	SD-34-19	Self-Tapping Screw 10 x ⅜ Phil. Truss Hd., Type AB	4
15	347603-1	Outer Door Assy. (With Opening)	1
16	347603-2	Outer Door Assy. (Solid)	1
17	347493-1	Inner Door Assy. (With Opening)	1
18	347493-2	Inner Door Assy. (Solid)	1
19	SD-34-19	Self-Tapping Screw 10 x ⅜ Phil. Truss Hd., Type AB	16
20	347080-2	Bushing	1
21	WS-29-75	Washer	4
22	351430-90	Door Catch & Strike Assy	1
23	351436-58	Door Hinge Pin & Retainer (Set of 2)	1
24	SC-115-62	Mach. Screw ¼-20 x ½ Phil. Truss Hd	2
25	342164-1	Plate - Pivot Shaft	1
26	NS-46-52	Nut & Lock Washer Assy. ¼-20 Hex "Keps"	2
27	347520-2	Seal - Sides (Sides)	2
28	SD-34-5	Self-Tapping Screw 6 x ⅜ Phil. Pan Hd., Type AB	8
29	347520-1	Seal - Door (Top & Bottom)	2
30	SD-34-5	Self-Tapping Screw 6 x ⅜ Phil. Pan Hd., Type AB	8
31	347593-1	Cover - Top	1
32	347592-1	Top Assy. (Painted)	1
33	347592-2	Top Assy. (SST)	1
34	347590-1	Vent	1
35	SD-34-22	Self-Tapping Screw 10 x ⅝ Phil. Truss Hd., Type AB	2
36	347581-1	Back Assy	1
37	SD-34-22	Self-Tapping Screw 10 x ⅝ Phil. Truss Hd., Type AB	4
38	347718-1	Support - Pivot	2
39	343176-1	Screw - Shoulder	2
40	347721-1	Pivot Lever Assy	1
41	347717-1	Switch - Door	1
42	SD-34-47	Self-Tapping Screw 6-32 x 1 Slot. Hex Washer Hd., Type T	2
43	347526-1	Bracket - Switch	1
44	SD-34-22	Self-Tapping Screw 10 x ⅝ Phil. Truss Hd., Type AB	2
45	SC-114-3	Mach. Screw 10-32 x ½ Slot. Hex Washer Hd	2
46	342206-1	Blower Hub Assy	1
47	347237-1	Blower Assy. (9⅞" O.D.)	1
48	343435-1	Blower Assy. (8½" O.D.)	1
49	345201-1	Motor (⅓ H.P.)	1
50	SC-113-77	Cap Screw 5/16-18 x 1½ Hex Hd	4
51	WS-29-46	Washer	8
52	NS-46-86	Nut & Lock Washer Assy. 5/16-18 Hex "Keps"	4
53	350711-3	Spacer - Insulating	2
54	346217-1	Washer - Rubber	8
	347429-1	Door & Glass Assy. (Incls. items 7 thru 15, 17, 19 & 23)	1
	347429-2	Solid Door Assy. (Incls. items 7 thru 12, 16, 18, 19 & 23)	1
	351436-59	Pivot Lever & Support Assy. (Incls. items 37, 38, 39 & 40)	1
	78752-12	Clamp ¼	1

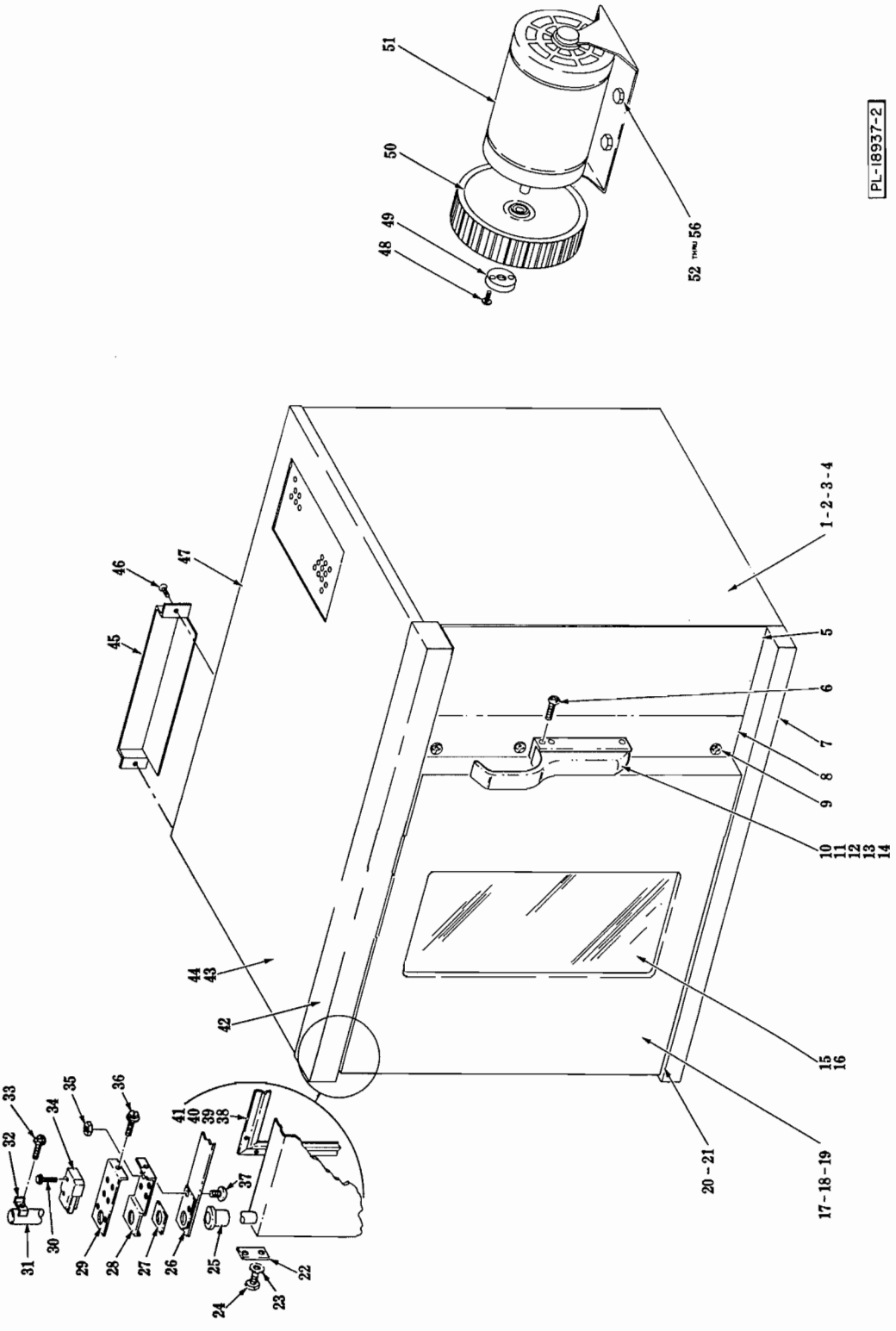

CABINET AND DOORS

CABINET AND DOORS

ILLUS. PL-18937-2	PART NO.	NAME OF PARTS	AMT.
1	347594-1	Side Panel - R.H. (Painted)	1
2	347594-2	Side Panel - L.H. (Painted)	1
3	347594-3	Side Panel - R.H. (SST)	1
4	347594-4	Side Panel - L.H. (SST)	1
5	347538-1	Lower Panel	1
6	SC-117-60	Mach. Screw 10-32 x 1¼ Phil. Oval Hd	3
7	347517-1	Lower Cover	1
8	353692-1	Door Jamb Assy	1
9	SD-34-22	Self-Tapping Screw 10-16 x ⅝ Phil. Truss Hd., Type AB	AR
10	353721-1	Latch	1
11	353939-1	Fastener	1
12	SC-114-99	Mach. Screw 10-32 x ½ Phil. Flat Hd	2
13	353683-1	Support - Latch	1
14	SC-115-51	Mach. Screw 10-32 x ½ Phil. Truss Hd	1
15	342129-1	Window	1
16	SD-34-19	Self-Tapping Screw 10-16 x ⅜ Phil. Truss Hd., Type AB	4
17	353722-1	L.H. Door Assy. (Outer) (W/Window) (Incls. items 15, 18, 19, 22, 23, 24 & 31)	1
18	347493-1	Inner Door Assy. (W/Opening)	1
19	SD-34-19	Self-Tapping Screw 10-16 x ⅜ Phil. Truss Hd., Type AB	20
20	347080-2	Bushing	1
21	WS-29-75	Washer	4
22	347604-1	Pivot - Retainer	2
23	WL-19-22	Lock Washer ¼ Ext. Shakeproof	4
24	SC-113-76	Cap Screw ¼-20 x 1 Hex Hd	4
25	347080-2	Bushing	1
26	353483-1	Plate - Door	1
27	353482-1	Spacer	1
28	353778-1	Support - Switch	1
29	353780-1	Bracket - Switch	1
30	SD-34-47	Self-Tapping Screw 6-32 x 1 Slot. Hex Washer Hd., Type T	2
31	353781-1	Shaft - Door	1
32	353784-1	Bracket - Actuator	1
33	SD-36-30	Self-Tapping Screw 8-32 x ¼ Slot. Hex Washer Hd., Type T	1
34	353782-1	Switch - Door	1
35	NS-46-52	Nut & Lock Washer Assy. ¼-20 "Keps"	2
36	SD-36-30	Self-Tapping Screw 8-32 x ¼ Slot. Hex Washer Hd., Type T	1
37	SC-115-62	Mach. Screw ¼-20 x ½ Phil. Truss Hd	2
38	347520-1	Seal - Door (Sides)	2
39	SD-34-5	Self-Tapping Screw 6-20 x ⅜ Phil. Pan Hd., Type AB	8
40	347520-2	Seal - Door (Top & Bottom)	2
41	SD-34-5	Self-tapping Screw 6-20 x ⅜ Phil. Pan Hd., Type AB	8
42	347593-1	Cover - Top	1
43	347592-1	Top Assy. (Painted)	1
44	347592-2	Top Assy. (SST)	1
45	347590-1	Vent	1
46	SD-34-22	Self-Tapping Screw 10-16 x ⅝ Phil. Truss Hd., Type AB	2
47	347581-1	Back Assy	1
48	SC-114-3	Mach. Screw 10-32 x ½ Slot. Hex Washer Hd	2
49	342206-1	Blower Hub Assy	1
50	342205-1	Blower Assy	1
51	345201-1	Motor (⅓ H.P.)	1
52	SC-116-84	Cap Screw 5/16-18 x 1⅛ Hex Hd	4
53	WS-29-46	Washer	8
54	NS-46-86	Nut & Lock Washer Assy. 5/16-18 Hex "Keps"	4
55	350711-3	Spacer - Insulating	2
56	346217-1	Washer - Rubber	8

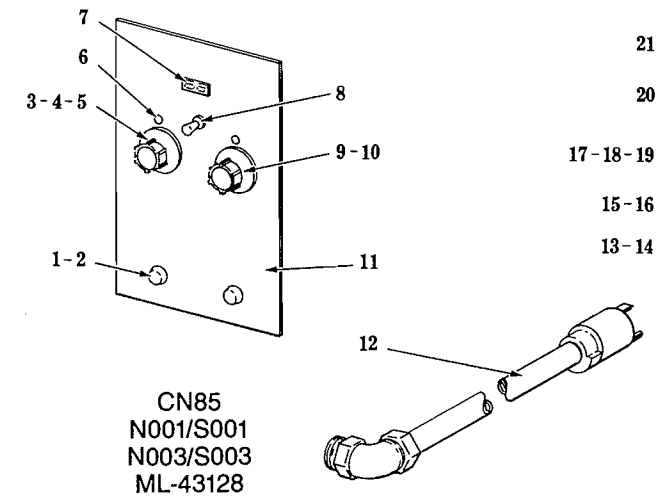

CN85
N001/S001
N003/S003
ML-43128

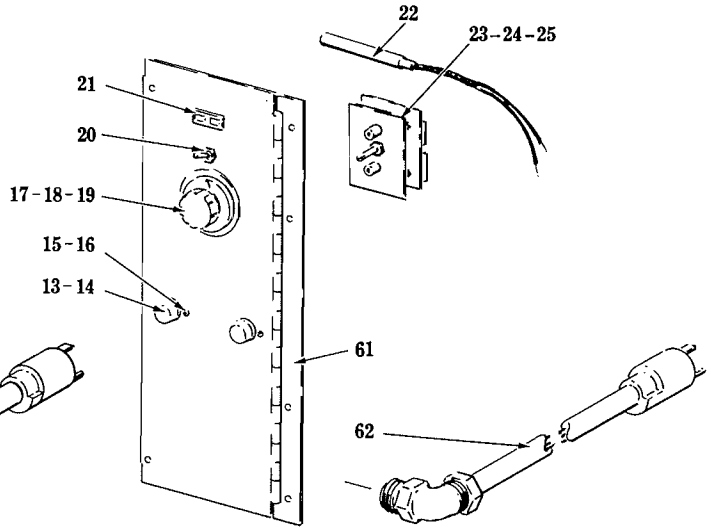

CN85
ML-43309

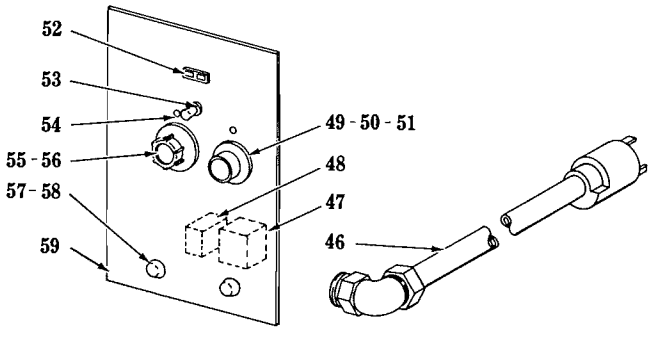

CN85
ML-43077
ML-43078

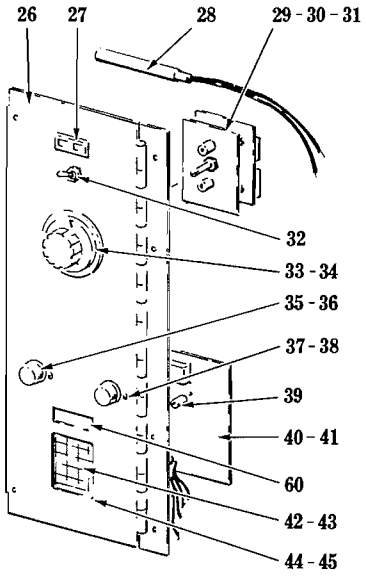

CN85
ML-43325
ML-43327

PL-19329-1

CONTROLS

CONTROLS

ILLUS. PL-19329-1	PART NO.	NAME OF PARTS	AMT.
1	344138-2	Fuse Holder	2
2	FE-19-40	Fuse - 15 Amp	2
3	340287-1	Timer - 1 Hr	1
4	350545-23	Knob Assy. (Timer)	1
5	343521-1	Timer - 5 Hr	1
6	350789-1	Button - Indicator	2
7	345751-5	Light - Indicator	1
8	340324-11	Switch (3 Position)	1
9	343385-1	Thermostat	1
10	345474-5	Knob Assy. (Thermostat)	1
11	347723-1	Panel - Control	1
12	335717-2	Cord & Plug Assy	1
13	344138-2	Fuse Holder	2
14	FE—19-40	Fuse - 15 Amp	2
15	SC-114-27	Mach. Screw 8-32 x ½ Phil. Pan Hd	4
16	NS-46-51	Mach. Nut 8-32 Hex	4
17	345474-5	Knob Assy	1
18	353560-1	Plate - Dial	1
19	SC-114-83	Mach. Screw 6-32 x ¼ Pan Hd	1
20	340324-11	Switch (3 Position)	1
21	345751-5	Light - Indicator	1
22	353589-1	Probe	1
23	353613-1	Controller - Temperature	1
24	SC-114-83	Mach. Scew 6-32 x ¼ Pan Hd	2
25	WS-28-20	Washer	2
26	353802-1	Control Panel Assy	1
27	345751-5	Light - Indicator	1
28	353589-1	Probe	1
29	353613-1	Controller - Temperature	1
30	SC-114-83	Mach. Screw 6-32 x ¼ Pan Hd	2
31	WS-28-20	Washer	2
32	340324-11	Switch (3 Position)	1
33	345474-8	Knob Assy	1
34	353560-1	Plate - Dial	1
35	344138-2	Fuse Holder	2
36	FE-19-40	Fuse - 15 Amp	2
37	SC-114-27	Mach. Screw 8-32 x ½ Phil. Pan Hd	4
38	NS-46-51	Mach. Nut 8-32 Hex	4
39	345967-2	Spacer	4
40	335691-1	P.C. Board Assy	1
41	335691-2	P.C. Board Assy. (ML-43297)	1
42	347618-1	Key Board - Sealed	1
43	347619-1	Gasket - Key Board	1
44	SC-116-86	Mach. Screw 2-56 x ¾ Phil. Pan Hd	4
45	WL-19-29	Lock Washer #2 Int. Shakeproof	4
46	335717-1	Cord & Plug Assy	1
47	345335-3	Relay	1
48	335708-1	Buzzer	1
49	342466-1	Timer	1
50	342845-2	Button - Timer	1
51	342844-1	Knob - Timer	1
52	345751-5	Light - Indicator	1
53	340324-11	Switch (3 Position)	1
54	350789-1	Button - Indicator	1
55	350545-22	Knob Assy. (Thermostat)	1
56	343385-1	Thermostat	1
57	344138-2	Fuse Holder	2
58	FE-19-40	Fuse 15 Amp	2
59	335709-1	Control Panel & Bracket Assy	1
60	353619-1	Filter	1
61	353689-2	Panel & Hinge Assy	1
62	335717-2	Cord & Plug Assy	1

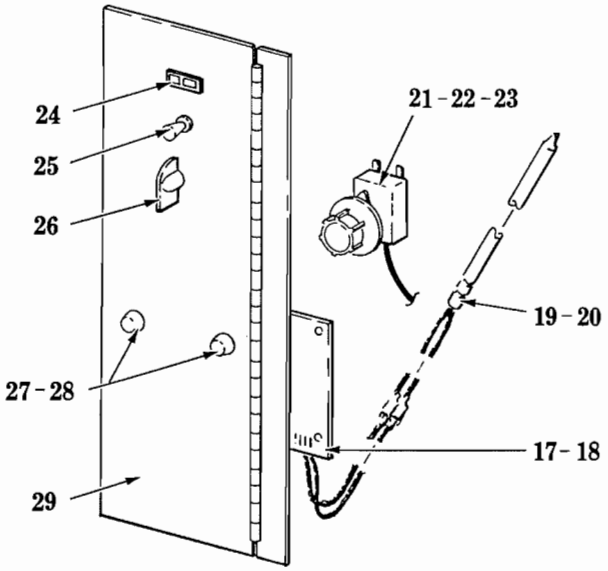

CN85K
ML-43104

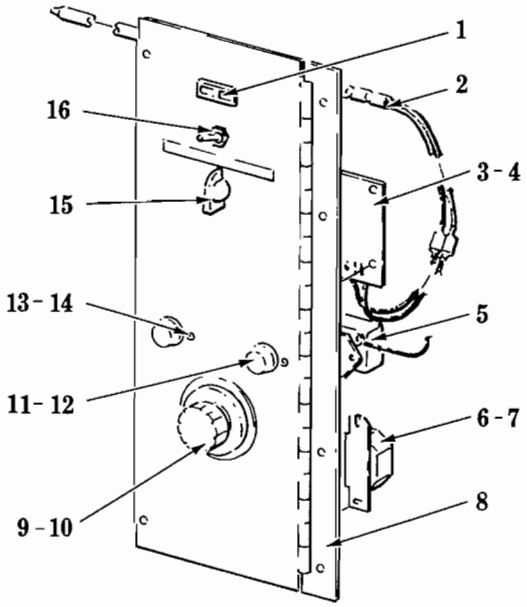

CN85K
ML-43310

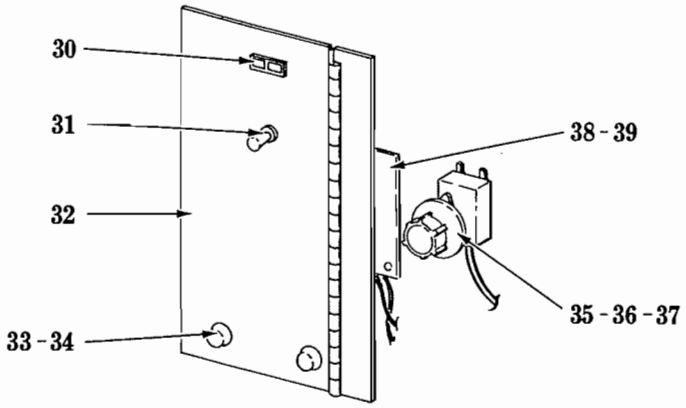

CN85K
N015

PL-19330-1

CONTROLS

CONTROLS

ILLUS. PL-19330-1	PART NO.	NAME OF PARTS	AMT.
1	345751-5	Light - Indicator	1
2	352659-1	Probe	1
3	352658-1	P.C. Board	1
4	NS-46-89	Nut & Lock Washer Assy. 6-32 "Keps"	3
5	353119-1	Timer	1
6	353120-1	Buzzer	1
7	NS-46-89	Nut & Lock Washer Assy. 6-32 "Keps"	2
8	353689-1	Panel & Hinge Assy	1
9	345474-8	Knob Assy	1
10	353116-1	Dial - Plate	1
11	344138-2	Fuse Holder	2
12	FE-19-40	Fuse - 15 Amp	2
13	SC-114-27	Mach. Screw 8-32 x ½ Phil. Pan Hd	4
14	NS-46-51	Mach. Nut 8-32 Hex	4
15	352660-1	Switch	1
16	340324-11	Switch (3 Position)	1
17	352658-1	P.C. Board	1
18	NS-46-89	Nut & Lock Washer Assy. 6-32 "Keps"	3
19	352659-1	Probe	1
20	335668-1	Clamp	1
21	343385-1	Thermostat	1
22	350545-22	Knob Assy. (Thermostat)	1
23	349259-1	Bracket - Thermostat	1
24	345751-5	Light - Indicator	1
25	340324-11	Switch (3 Position)	1
26	352660-1	Switch	1
27	344138-2	Fuse Holder	2
28	FE-19-40	Fuse - 15 Amp	2
29	352739-1	Panel & Hinge Assy	1
30	345751-5	Light - Indicator	1
31	340324-11	Switch (3 Position)	1
32	335238-1	Panel & Hinge Assy	1
33	344138-2	Fuse Holder	2
34	FE-19-40	Fuse - 15 Amp	2
35	343385-1	Thermostat	1
36	350545-22	Knob Assy. (Thermostat)	1
37	349259-1	Bracket - Thermostat	1
38	349200-1	P.C. Board	1
39	349201-1	Probe	1
	349202-1	Hex Connector 24" Lg. (Fastron)	1
	342132-1	Guard - Thermosat Probe	1
	SD-34-10	Self-Tapping Screw 8 x ½ Slot. Hex Washer Hd., Type B	2
	352745-1	Cord & Plug	1
	352732-1	Receptacle	1

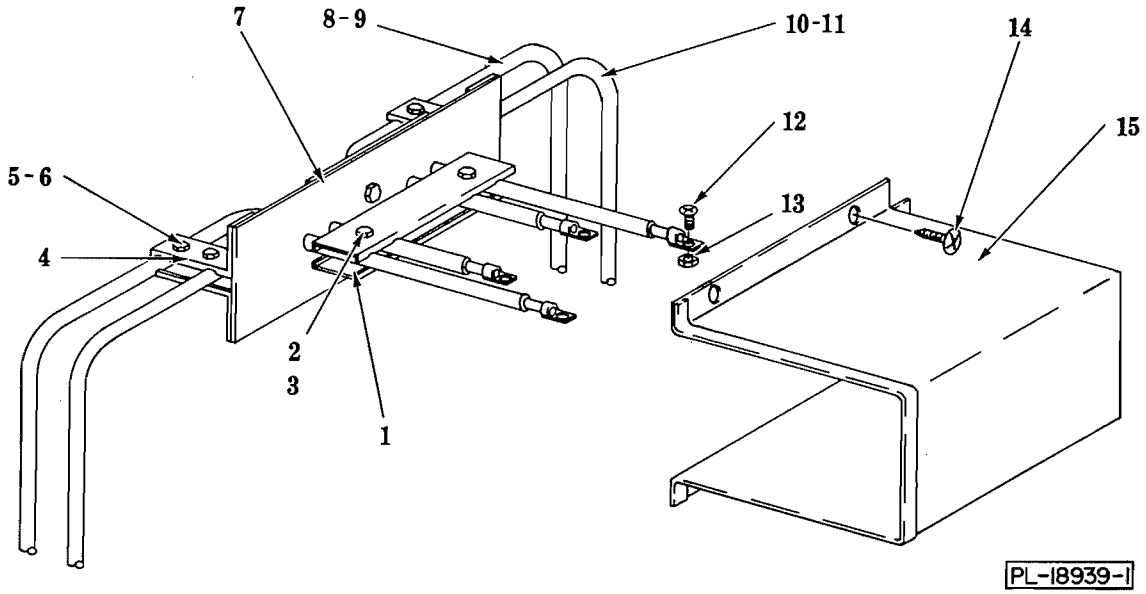

ELECTRIC HEATERS
(TWO UNITS)

ELECTRIC HEATERS
(TWO UNITS)

ILLUS. PL-18939-1	PART NO.	NAME OF PART6	AMT.
1	342131-1	Clamp - Large	2
2	SC-114-2	Mach. Screw 10-32 x ¾ Slot. Hex Washer Hd	2
3	NS-46-88	Nut & Lock Washer Assy. 10-32 "Keps"	2
4	342133-1	Clamp - Small	6
5	SC-114-2	Mach. Screw 10-32 x ¾ Slot. Hex Washer Hd	6
6	NS-46-88	Nut & Lock Washer Assy 10-32 "Keps"	6
7	351433-98	Seal Plate Assy	1
8	351393-2	Heater Unit Assy. (Outer) (208 V.)	1
9	351393-4	Heater Unit Assy. (Outer) (240 V.)	1
10	351393-1	Heater Unit Assy. (Inner) (208 V.)	1
11	351393-3	Heater Unit Assy. (Inner) (240 V.)	1
12	SC-114-3	Mach. Screw 10-32 x ½ Slot. Hex Washer	4
13	NS-46-88	Nut & Lock Washer Assy. 10-32 "Keps"	4
14	SD-34-22	Self-Tapping Screw 10 x ⅝ Phil. Truss Hd., Type AB	3
15	347563-1	Cover - Heater Unit	1
	347494-1	Heater Assy. (208 V.) (Incls. items 1 thru 8 & 10)	1
	347494-2	Heater Assy. (240 V.) (Incls. items 1 thru 7, 9 & 11)	1

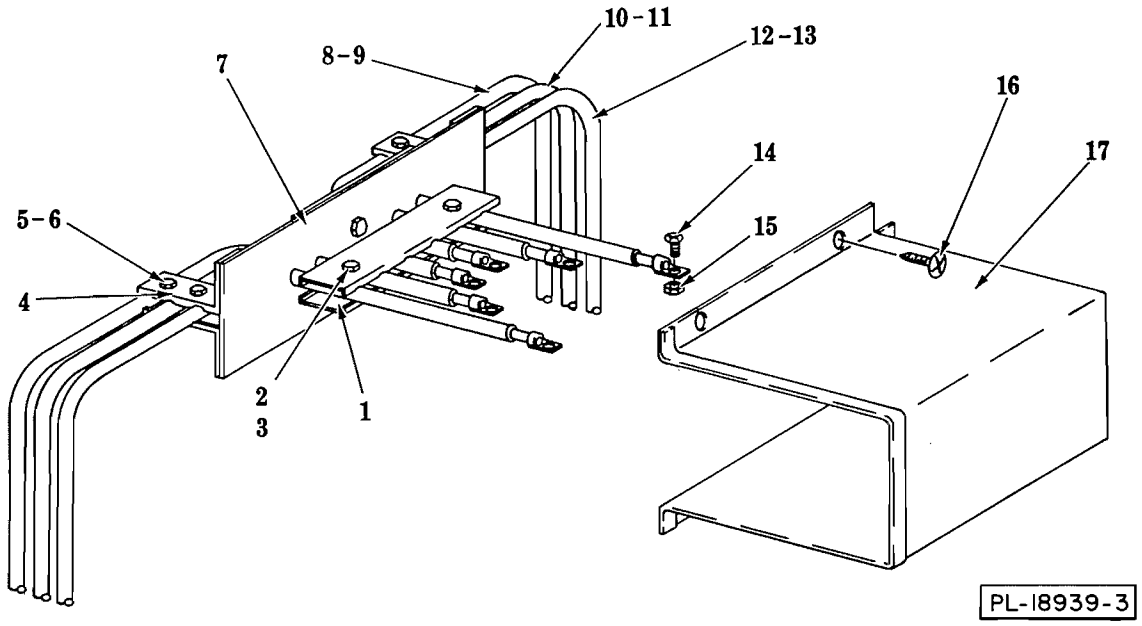

ELECTRIC HEATERS
(THREE UNITS)

ELECTRIC HEATERS
(THREE UNITS)

ILLUS. PL-18939-3	PART NO.	NAME OF PARTS	AMT.
1	342131-1	Clamp - Large	2
2	SC-114-2	Mach. Screw 10-32 x ¾ Slot. Hex Washer Hd	2
3	NS-46-88	Nut & Lock Washer Assy. 10-32 "Keps"	2
4	342133-1	Clamp - Small	6
5	SC-114-2	Mach. Screw 10-32 x ¾ Slot. Hex Washer Hd	6
6	NS-46-88	Nut & Lock Washer Assy. 10-32 "Keps"	6
7	351438-51	Seal Plate Assy	1
8	351393-5	Heater Unit Assy. (208 V.)	1
9	351393-6	Heater Unit Assy. (240 V.)	1
10	351393-2	Heater Unit Assy. (208 V.)	1
11	351393-4	Heater Unit Assy. (240 V.)	1
12	351393-1	Heater Unit Assy. (208 V.)	1
13	351393-3	Heater Unit Assy. (240 V.)	1
14	SC-114-3	Mach. Screw 10-32 x ½ Slot. Hex Washer Hd	4
15	NS-46-88	Nut & Lock Washer Assy. 10-32 "Keps"	4
16	SD-34-22	Self-Tapping Screw 10 x ⅝ Phil. Truss Hd., Type AB	4
17	347563-1	Cover - Heater Unit	1
	352661-1	Heater Assy. (208 V.) (Incls. items 1 thru 8, 10 & 12)	1
	352661-2	Heater Assy. (240 V.) (Incls. items 1 thru 7, 9, 11 & 13)	1

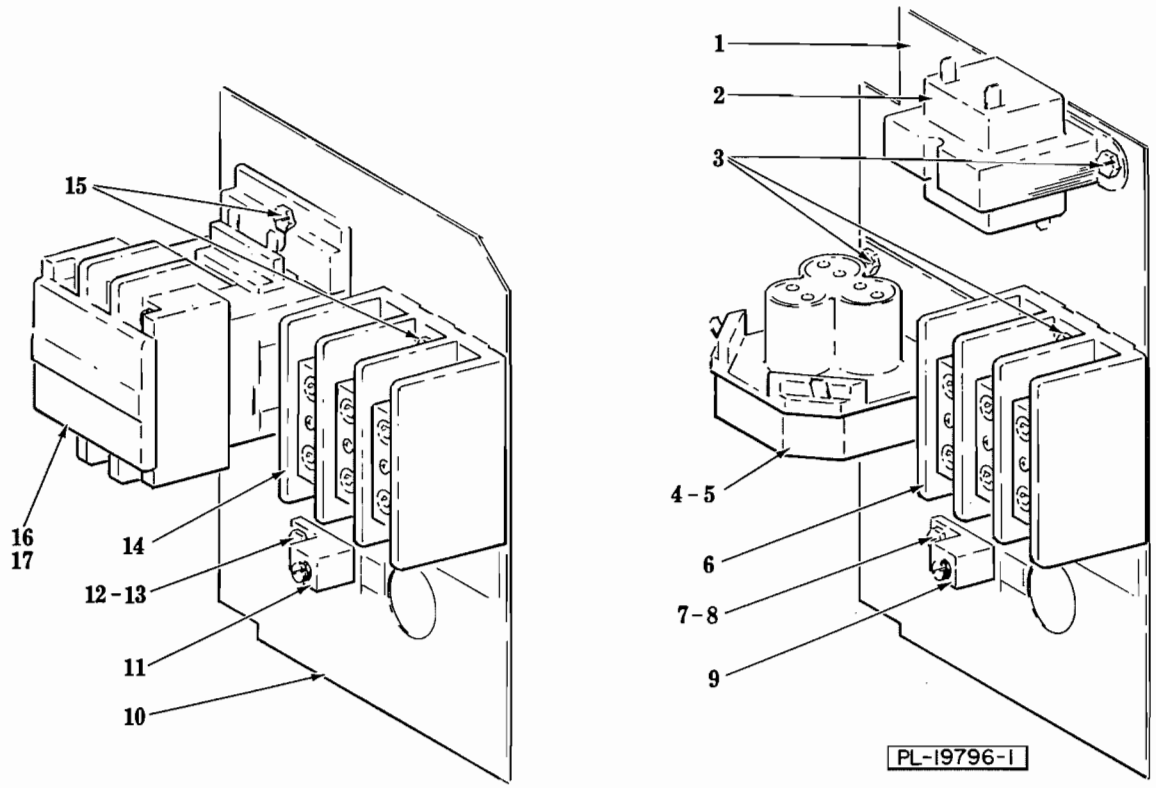

CONTACTOR PLATE

ILLUS. PL-19796-1	PART NO.	NAME OF PARTS	AMT.
1	353564-1	Plate - Contactor	1
2	335653-1	Transformer	1
3	SD-34-62	Self-Tapping Screw 10-32 x ½ Slot. Hex Washer Hd., Type T	6
4	353618-1	Relay - Mercury (ML-43309, ML-43325 & ML-43327)	1
5	349257-1	Relay - Mercury (ML-43104 & ML-43310)	1
6	345504-1	Block - Terminal	1
7	SD-34-62	Self-Tapping Screw 10-32 x ½ Slot. Hex Washer Hd., Type T	1
8	WL-19-22	Lock Washer ¼ Ext. Shakeproof	2
9	350700-2	Lug - Terminal	1
10	349252-1	Plate - Contactor	1
11	350700-2	Lug - Terminal	1
12	SD-34-62	Self-Tapping Screw 10-32 x ½ Slot. Hex Washer Hd., Type T	1
13	WL-19-22	Lock Washer ¼ Ext. Shakeproof	2
14	345504-1	Block - Terminal	1
15	SD-34-62	Self-Tapping Screw 10-32 x ½ Slot Hex Washer Hd., Type T	4
16	346466-10	Contactor (40 Amp.)	1
17	346466-7	Contactor (30 Amp.)	1

OPTIONS AND ACCESSORIES

ILLUS. PL-18940	PART NO.	NAME OF PARTS	AMT.
1	347498-3	Rack Guide (L.H.)	1
2	347498-4	Rack Guide (R.H.)	1
3	347497-2	Rack	AR
4	348164-1	Leg	4
5	347757-2	Panel - Bottom (Liner)	1
6	347758-4	Panel - Top Rear (Liner)	1
7	347759-4	Panel - Top Front (Liner)	1
8	347760-2	Panel - Back (Liner)	1
9	347761-2	Panel - Side (Liner)	1
10	335234-1	Deflector (ML43104, ML43228 & CN85K)	1
11	335235-1	Door Jam (CN85K)	1
12	352744-1	Door Jam (ML43104, ML43228, ML43238 & ML43297)	1
13	341655-6	Caster - 6"	4

MODELS AND FACTORY NUBMERS

CN85	ML43077
	ML43078
	ML43128
	ML43309
	ML43325
	ML43327
CN85	208N001C10
	240N001C10
	208S001C10
	240S001C10
	208N003C10
	240N003C10
	208S003C10
	240S003C10
CN85K	208N015A00
	240N015A00
CN85K	ML43104
	ML43310