HOBART

INSTRUCTION MANUAL

... with Replacement Parts

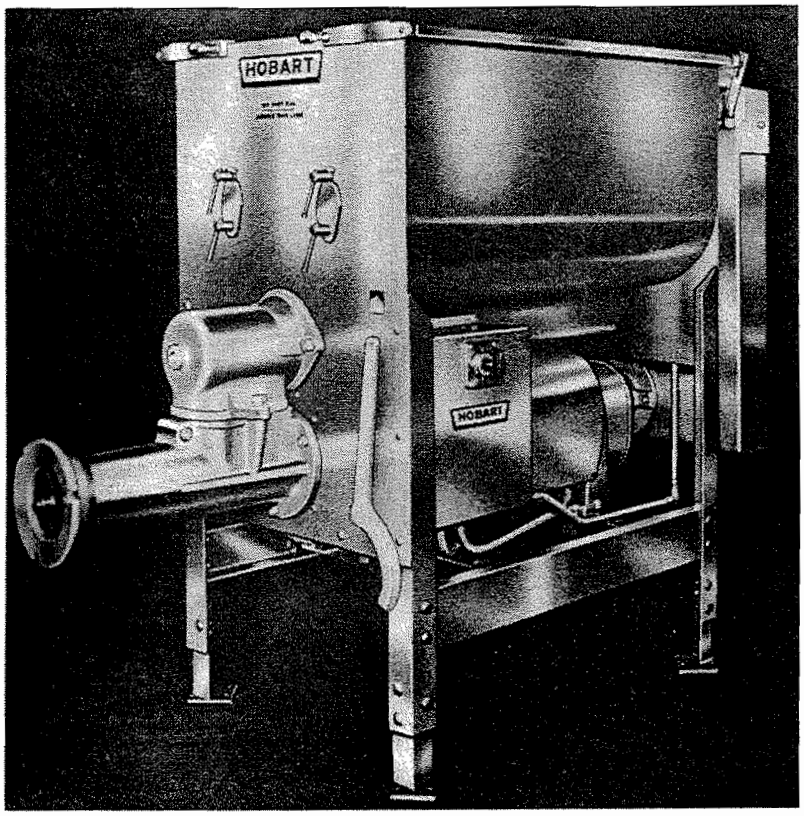

MODEL 4356
MIXER-GRINDER

ML-16855 (R.H.)
ML-17270 (L.H.)

A product of HOBART CORPORATION TROY, OHIO 45374

FORM 10319D (Rev. 10-74) (Supsds. F. 10319C, 8-73)

- THIS PAGE INTENTIONALLY LEFT BLANK -

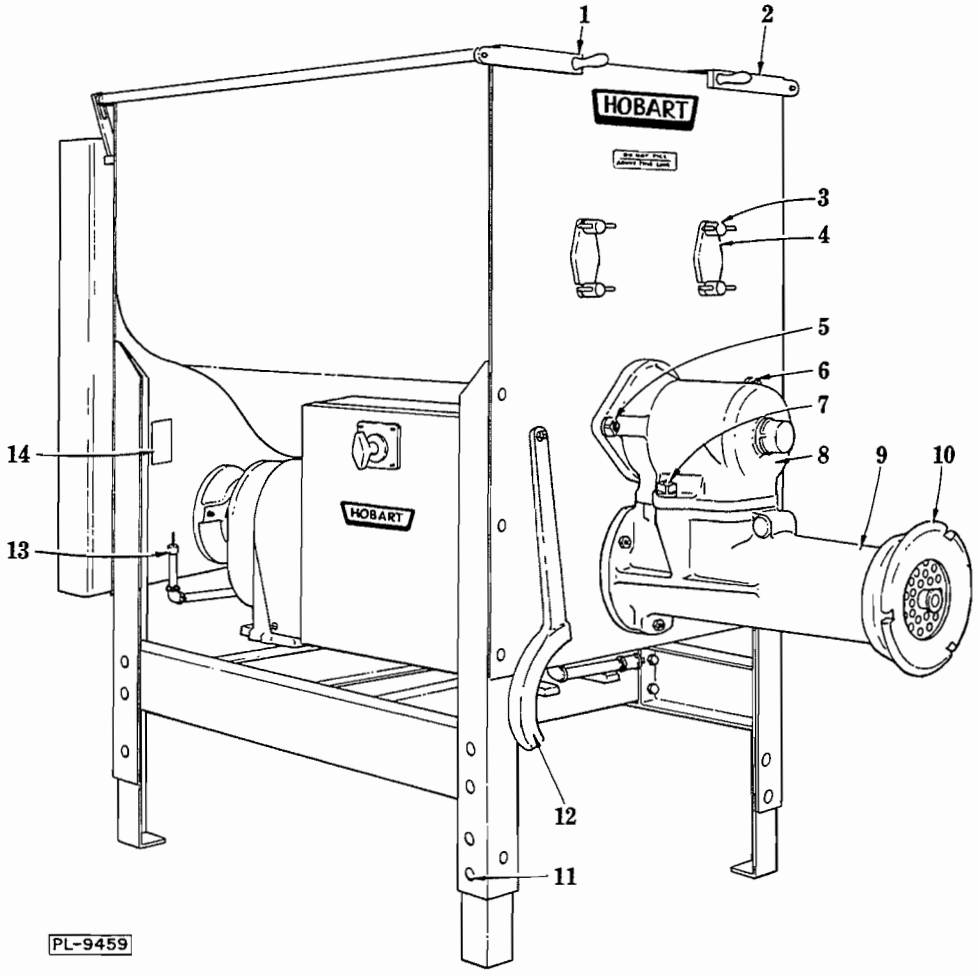

Fig. 1

Instructions for Operation and Care of
MODEL 4356 MIXER-GRINDER

INSTALLATION:

Unpack the machine and place in its operating location. Level the machine by adjusting the four feet, each of which are locked in place by three bolts (11, Fig. 1).

All internal wiring of machine is complete before machine is shipped. Before making any electrical supply connections CHECK THE SPECIFICATIONS ON THE SERIAL PLATE (14, Fig. 1) TO MAKE SURE THEY AGREE WITH THOSE OF YOUR ELECTRICAL SERVICE.

Electrical connections should be made by qualified workmen who will observe all applicable Safety Codes and the National Electrical Code.

SUGGESTED WIRE AND FUSE SIZES FOR INDIVIDUAL BRANCH CIRCUIT

Volts	Phase	Line Fuse	Wire Size
208	3	110	#4
220	3	100	#4
440	3	50	#8

Connect the individual branch electrical power supply to the terminal block inside the switch control box. A 1-3/8" dia. hole (for 1" conduit) is provided in the bottom of the control box (1, Fig. 3) for this connection. Circuit conductors and fuse protection should conform to local as well as national code requirements.

To check cylinder worm rotation, the hopper covers (1 & 2, Fig. 1) must be closed and the

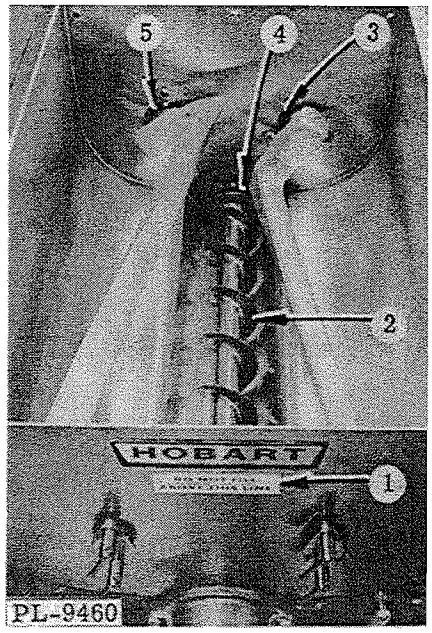

Fig. 2

cylinder feed bowl (8, Fig. 1) must be in place because of interlock switches.

Assemble the grinder attachment (9, Fig. 1), the hopper conveyor screw (2, Fig. 2) and then the cylinder feed bowl (8, Fig. 1).

With selector switch (2, Fig. 3) placed in grind position (see switch operation in Controls paragraph), make an instantaneous type rotation check to determine if the grinder worm revolves counter-clockwise facing the attachment hub (never allow machine to continue operating in reverse as oil will then be pumped out of transmission). If rotation is not counter-clockwise interchange any two power supply leads to the terminal block. (Pull main power disconnect switch to cut off power before changing leads).

CONTROLS:

The push-pull type selector switch (2, Fig. 3) is located in the cover of the control box. This switch has three positions; "M" for mixing only, "FG" for feeding and grinding, and "G" for grinding only. The last position "G" will seldom be used except to empty grinder cylinder (without feeding more meat into it from the hopper).

To select an operation, push-in switch handle (2, Fig. 3) and rotate handle to desired position. A momentary pull-out of handle will start the operation and a momentary push-in of handle will stop the operation.

NOTE: There is a starting delay time of approximately four seconds programmed each time handle is pushed in for stopping or shifting, or each time the circuit is opened by an interlock switch or the main disconnect switch.

CYLINDER FEED BOWL:

The cylinder feed bowl (8, Fig. 1) supports and is at the end of the hopper conveyor screw (2, Fig. 2). Material in the hopper is conveyed thru this feed bowl into the grinder attachment (9, Fig. 1). To remove the feed bowl; loosen the two nuts (7, Fig. 1) at the grinder cylinder and remove the two nuts (5, Fig. 1) on the hopper studs. Slide feed bowl forward and off. A wrench (6, Fig. 1) is provided which fits these retaining nuts. Make sure that "O" ring is properly seated in groove at re-assembly of feed bowl.

The hopper conveyor screw may be withdrawn from the hopper after the feed bowl is removed. A chain driven square drive shaft (1, Fig. 4) drives the conveyor screw. This shaft is supported by two ball bearings and sealed from the hopper by two seals.

GRINDER ATTACHMENT:

The grinder attachment is mounted to the attachment hub on three studs. This attachment is easily cleaned without removal. The notched type adjusting ring (10, Fig. 1) may be removed by

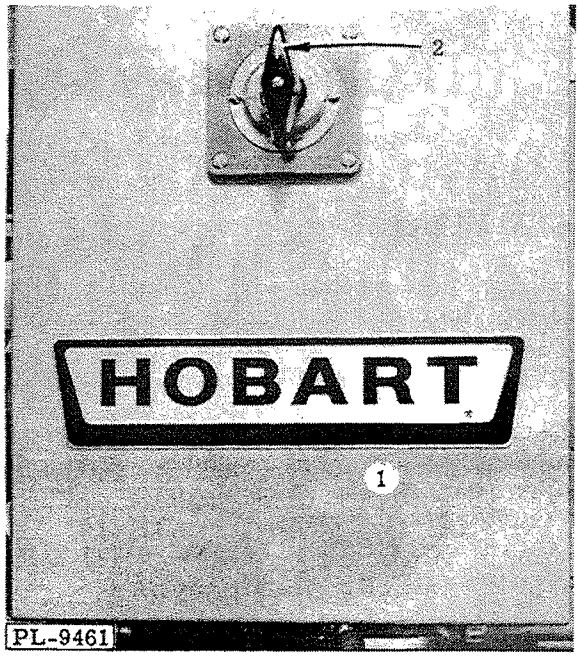

Fig. 3

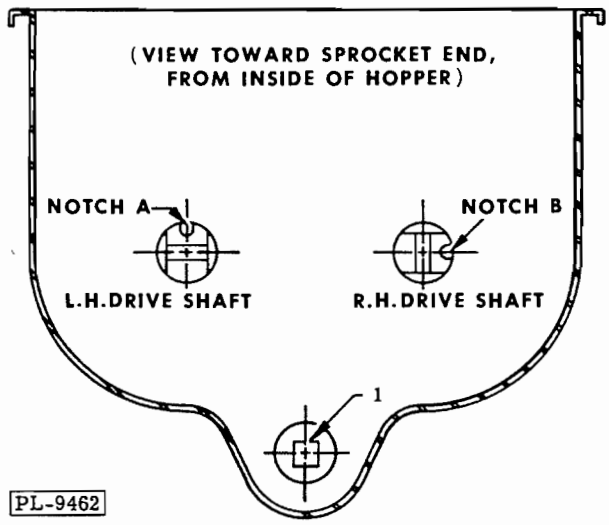

Fig. 4

using the spanner wrench (12, Fig. 1) furnished, and then withdraw grinder worm. If attachment removal is desired, the cylinder feed bowl must first be removed. Next, using the wrench (6, Fig. 1) provided, remove the three retaining nuts (at re-assembly make sure these nuts are tightened before assembling worm and adjusting ring).

A heavy duty tapered roller bearing which is lubricated by the transmission oil takes the worm thrust. Double seals prevent entrance of moisture or loss of lubricant.

Before using the grinder attachment, take it apart and wash it thoroughly. The knife and plate need some preliminary lubrication: rub tallow over the cutting faces of these parts. When assembling the knife be sure to turn the cutting side out toward the perforated plate. See that the notch on the circumference of the plate fits over the pin in the cylinder. Knives and plates must be sharp and true for proper cutting action. Keep the grinder attachment in a clean and sanitary condition.

MIXING ARMS:

Mixing arms must be in proper relation ("time") with each other to avoid interference. When changing or removing chain, drive sprocket relationship can change.

Turn latch and lift off chain cover for chain servicing. Chain connections should be made at the middle of the upper horizontal span (Fig. 5). Proper tension is from 1/4" to 1/2" sag in this span.

Sprocket relation may be checked by having the L.H. drive shaft notch (A, Fig. 4) at the vertical top and the R.H. drive shaft notch (B, Fig. 4) at horizontal right. Check mixing arm clearance by manually rotating assembled arms one complete turn before applying power for the first time.

The mixing arms are readily removable. Mixing arm removal and re-assembly of these arms is made more easily if the operator has a helper (for end alignment) although it can be a one man operation. Make sure the electrical power is shut off. Stand on a platform or box high enough to allow easy access to the mixing arms. Open hinged cover (1 or 2, Fig. 1). Rotate the mixing arm to be removed until the edge at the front is in an up position (1, Fig. 6). Next loosen the two thumb screws (3, Fig. 1) that retain the mixing arm stub-shaft (4, Fig. 1). Rotate and remove stub-shaft while supporting end of mixing arm inside hopper. Lift the front end of the arm and pivot it out of the driving shaft slot. When the arm is re-assembled it can only be installed in one proper position due to the foolproof locating pin. The driving hub groove, for this locating pin, should be in the top position when arm is re-assembled.

OPERATION:

The model 4356 may be ordered with high speed grinder gears which will increase the grinder worm speed from a standard 215 R.P.M. to 288 R.P.M. Using these high speed gears along with a #66 grinder end and deflector you can increase second grind fresh beef output by approx. 50% (thru 1/8" or larger plates). HIGH SPEED GEARS ARE NEVER TO BE USED FOR FIRST GRIND BEEF. Stainless steel second cut mixing arms should be used with this high speed operation.

Optional sprockets (along with the proper drive chains) may also be ordered to increase the feed (conveyor) screw speed from 81 to 110 R.P.M. and the mixing arms from 22 to 30 R.P.M.

The model 4356 grinder has a meat capacity of five hundred pounds as indicated by the capacity line on the end of the hopper (1, Fig. 2). This grinder can grind large chunks of fresh meat, but frozen meat must be chipped, flaked or broken into small enough pieces that will feed into the cylinder feed bowl freely. The hopper conveyor screw and mixing arms are designed to mix and feed the bowl only, not break up frozen pieces.

Meat may be mixed in the hopper for any desired length of time. During the "mixing-only" period, the hopper conveyor screw and mixing arms operates in a reverse direction, assuring a complete mix of all ingredients in the hopper and preventing

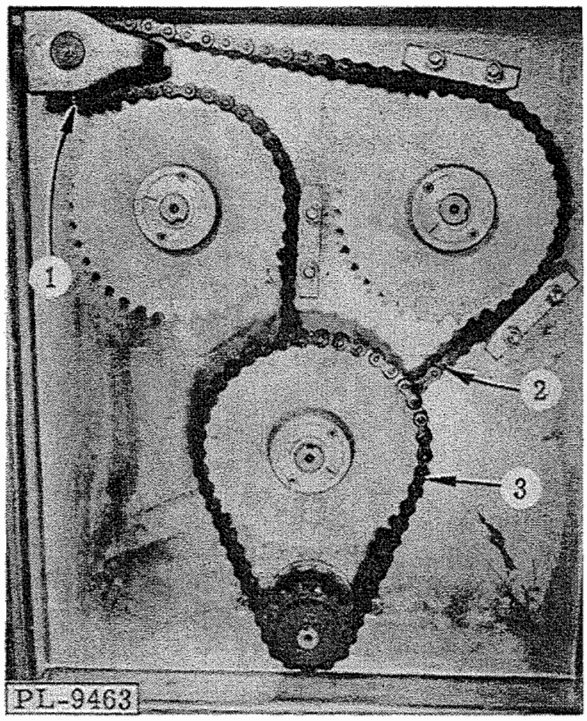

Fig. 5

meat from entering the cylinder feed bowl. Continuous mixing occurs during the grinding cycle.

Selector switch operations are explained under the "Control" section.

LUBRICATION:

Hobart servicing offices have the current lubricants listed in their lubrication manual.

Both motors have the same type lubrication. The fan end bearing is grease lubricated and sealed for life of the motor. The front motor bearing is lubricated from the transmission and will not need lubrication attention.

Both motor transmissions are lubricated at the factory. A dip stick (13, Fig. 1) at each transmission is provided for checking the oil level. Drain and re-fill the transmissions annually with the same oil as used at the factory.

The idler sprocket should be lubricated at both fittings (1, Fig. 5) with the proper lubricant after each 20 hours of operation.

The roller chains (2 & 3, Fig. 5) should be lubricated with the proper lubricant after each 20 hours of operation.

CLEANING:

This meat grinding machine is designed for easy cleaning by removing the following components: cylinder feed bowl and hopper conveyor screw; grinder adjusting ring; plate, knife and worm. Also the mixing/feeding arms are readily removable, if required. Removal of these components has already been described.

A rubber seal (3, 4, 5, Fig. 2) at each of the three driving shafts (inside the hopper) may be removed for cleaning by hand grasping the outer flange or using a dull screw driver tip and pulling seal out.

The grinder can be washed down with hot water or steam as is customary in meat processing operations. Use care to avoid direct high pressure flushing of the switch box, electrical connections, etc.

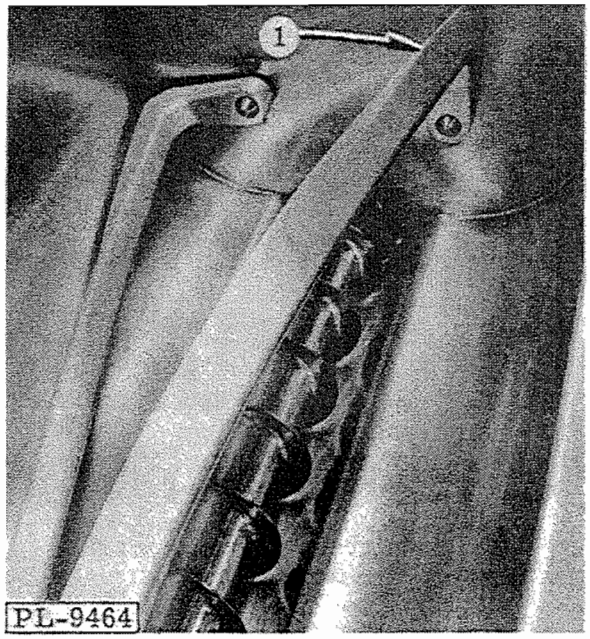

Fig. 6

SAFETY INTERLOCK:

This meat grinder has three (normally open) safety interlock switches, all of which must be closed before grinder can be operated. There is an interlock switch (1, Fig. 7) for each of the two hopper covers (1 & 2, Fig. 1) and one for the cylinder feed bowl (8, Fig. 1). Breaking the circuit on any one of the three switches will break the electrical power supply and render the grinder inoperative.

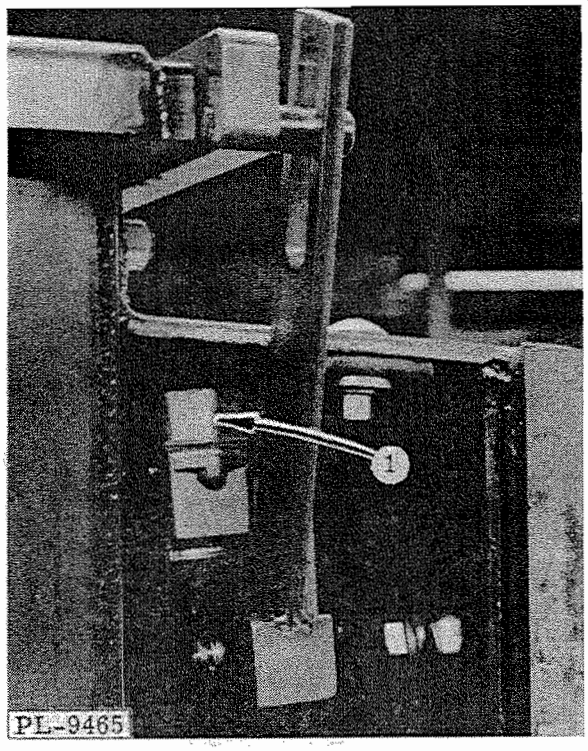

Fig. 7

AIR INTAKE:

Under normal operating conditions the two motor air intake screens (located under each gear case) will need little or no attention. However in some installations where flour, seasonings or other foreign materials are present in the air, these intake screens may become partially or completely covered and throttle the cooling air to the motors. Where an adverse dust condition does exist, periodically check these screens (using an adequate light) and wipe exposed side of screen under each motor with a rag or brush as required.

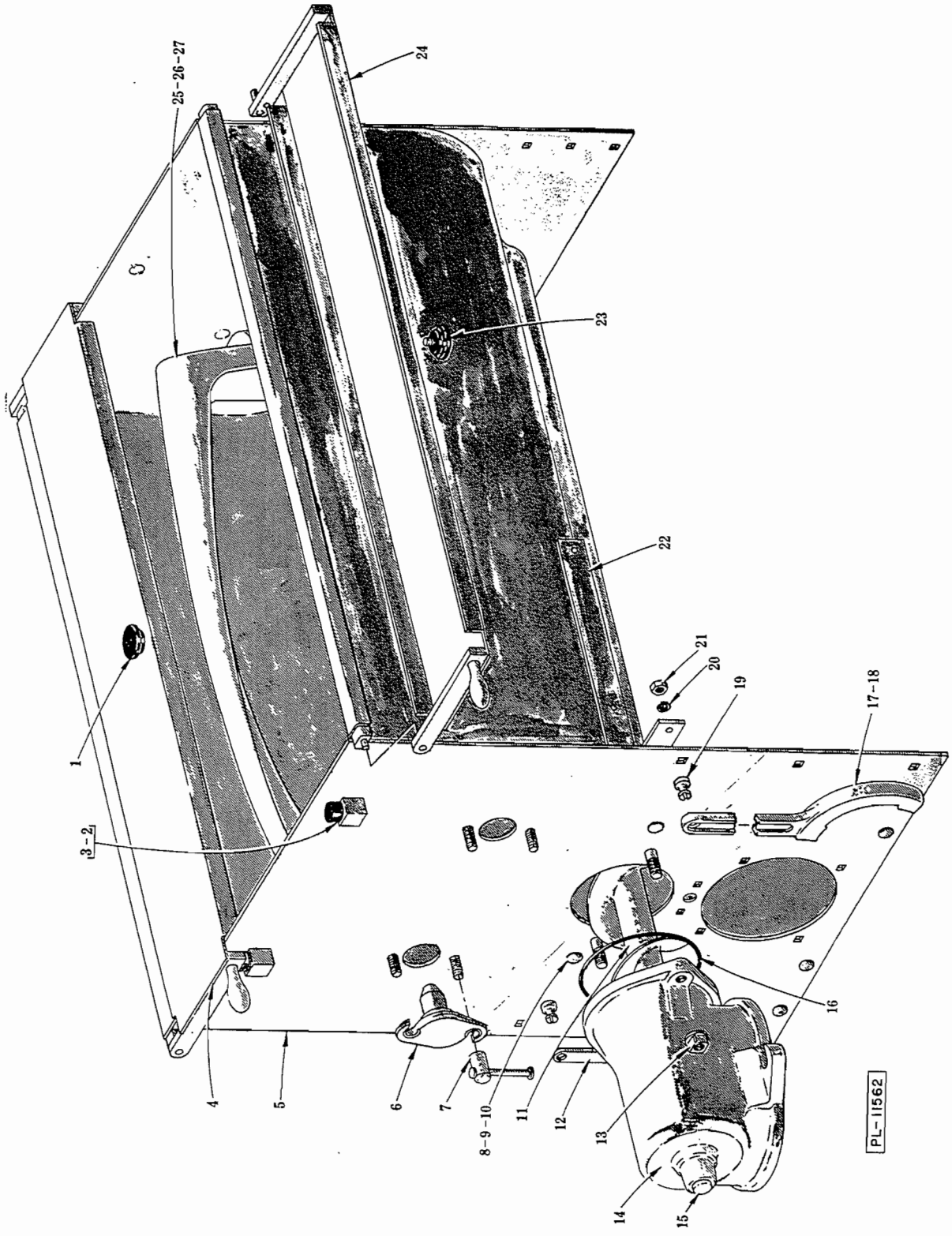
25-26-27
24
23
22
21
20
19
17-18
1
3-2
16
4
5
6
7
8-9-10
11
12
13
14
15
PL-11562

HOPPER UNIT

HOPPER UNIT

ILLUS. PL-11562	PART NO.	NAME OF PART	AMT.
1	M-83681	Bumper - Rubber	1
2	M-18682	Bumper - Rubber	2
3	WS-24-1	Washer	2
4	S-83799-1	Hopper Cover Assy. (L.H.) (Incls. item #1)	1
5	T-83795-1	Hopper Assy.	1
6	P-83787	Shaft - Mixer Arm Stub	2
7	M-101557	"T" Thumb Nut Assy.	4
8	SC-82-2	Carriage Bolt - 3/8"-16 x 1"	6
9	NS-13-25	Full Nut - 3/8"-16 Hex Fin.	6
10	WL-4-4	Lock Washer - 3/8" x .136" x .070"	6
11	S-83814	Conveyor Screw Assy.	1
12	M-69863	Wrench - Cylinder Nut	1
13	M-69862	Nut - Cylinder	2
14	R-86743	Bowl - Cylinder Feed (Incls. item #15)	1
15	B-112926	Feed Screw Bushing Assy.	1
16	R-67500-63	"O" Ring	1
17	S-80368	Wrench - Spanner (#56)	1
18	D-103829	Wrench - Spanner (#66)	1
19	M-83820	Screw - Spanner Wrench Support	2
20	WL-4-4	Lock Washer - 3/8" x .136" x .070"	2
21	NS-13-25	Full Nut - 3/8"-16 Hex Fin.	2
22	P-83802	Bracket - Control Box	2
23	M-83681	Bumper - Rubber	1
24	S-83798-1	Hopper Cover Assy. (R.H.) (Incls. item #23)	1
25	S-84987	Mixing Arm Assy. (Incls. item #27)	2
26	T-101765	2nd Cut Mixing Arm Assy. (High Speed) (Incls. item #27)	2
27	A-105237	Mixing Arm Bushing & Loctite Sub-Assy.	1

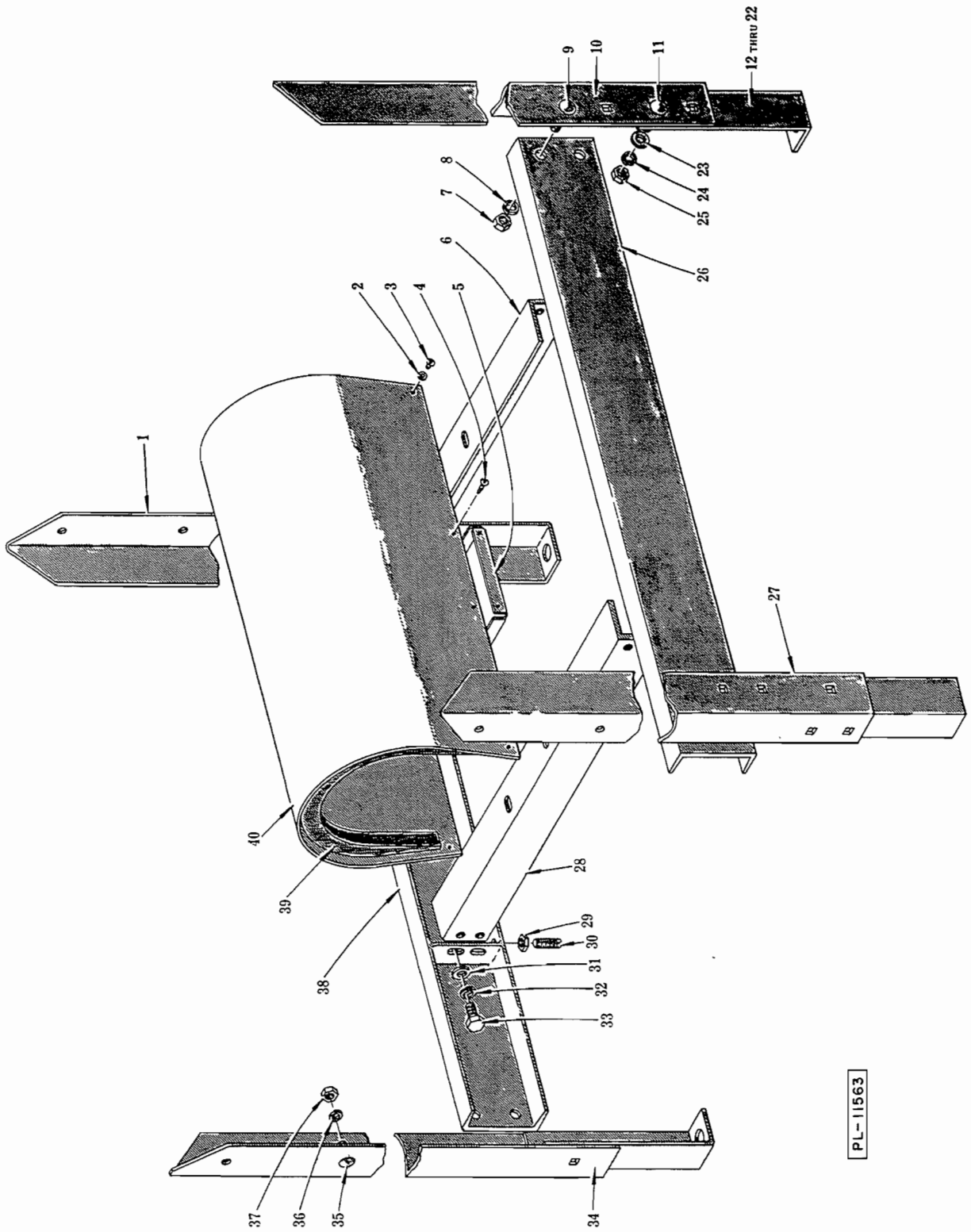
1
2
3
4
5
6
7
8
9
10
11
12 THRU 22
23
24
25
26
27
28
29
30
31
32
33
34
35
36
37
38
39
40
PL-11563

FRAME UNIT

FRAME UNIT

ILLUS. PL-11563	PART NO.	NAME OF PART	AMT.
1	T-83796-9	Leg (L.H. Rear)	1
2	WL-8-17	Lock Washer - 1/4" Int. Shakeproof	4
3	SC-9-41	Mach. Screw - 1/4"-20 x 3/8" Rd. Hd.	4
4	SD-22-13	Self-Tapping Screw - #10 x 3/4" Rd. Hd., Type AB	4
5	R-84885	Guard - Fan	1
6	T-83796-3	Brace - Motor	1
7	NS-13-33	Full Nut - 1/2"-13 Hex Fin.	8
8	WL-4-11	Lock Washer - 1/2" x .171" x .125"	8
9	SC-82-1	Carriage Bolt - 1/2"-13 x 1-1/2"	8
10	T-83796-8	Leg (R.H. Rear)	1
11	SC-82-1	Carriage Bolt - 1/2"-13 x 1-1/2"	12
12	R-83797-1	Foot - Adjustable (Short) (16-1/4" Floor to Adj. Ring) (6" Leg)	4
13	R-83797-2	Foot - Adjustable (Medium) (22-1/4" Floor to Adj. Ring) (12" Leg)	4
14	R-83797-3	Foot - Adjustable (Long) (28-1/4" Floor to Adj. Ring) (Std., 18" Leg)	4
15	R-83797-4	Foot - Adjustable (34-1/4" Floor to Adj. Ring) (24" Leg)	4
16	R-83797-5	Foot - Adjustable (40-1/4" Floor to Adj. Ring) (30" Leg)	4
17	R-83797-6	Foot - Adjustable (19-1/4" Floor to Adj. Ring) (9" Leg)	4
18	R-83797-7	Foot - Adjustable (25-1/4" Floor to Adj. Ring) (15" Leg)	4
19	R-83797-8	Foot - Adjustable (31-1/4" Floor to Adj. Ring) (21" Leg)	4
20	R-83797-9	Foot - Adjustable (37-1/4" Floor to Adj. Ring) (27" Leg)	4
21	R-83797-10	Foot - Adjustable (43-1/4" Floor to Adj. Ring) (33" Leg)	4
22	R-83797-11	Foot - Adjustable (46-1/4" Floor to Adj. Ring) (36" Leg)	4
23	WS-24-1	Washer	12
24	WL-4-11	Lock Washer - 1/2" x .171" x .125"	12
25	NS-13-33	Full Nut - 1/2"-13 Hex Fin.	12
26	T-83796-4	Side Brace & Gusset Assy. (R.H.)	1
27	T-83796-6	Leg (R.H. Front)	1
28	T-83796-3	Brace - Motor	1
29	NS-13-25	Full Nut - 3/8"-16 Hex Fin.	4
30	SC-46-71	Set Screw - 3/8"-16 x 1-1/2" Hdls., Flat Pt.	4
31	WS-24-1	Washer	8
32	WL-4-11	Lock Washer - 1/2" x .171" x .125"	8
33	SC-62-88	Fin. Bolt - 1/2"-13 x 1-1/4" Hex Hd.	8
34	T-83796-7	Leg (L.H. Front)	1
35	SC-82-2	Carriage Bolt - 3/8"-16 x 1"	12
36	WL-4-4	Lock Washer - 3/8" x .136" x .070"	12
37	NS-13-25	Full Nut - 3/8"-16 Hex Fin.	12
38	T-83796-5	Side Brace & Gusset Assy. (L.H.)	1
39	M-83784	Seal - Motor Shield	2
40	S-83793	Shield - Motor	1
	T-83796-1	Frame Assy. (Incls. items #1, 6, 7, 8, 9, 10, 26, 27, 28, 29, 30, 31, 32, 33, 34 & 38)	1

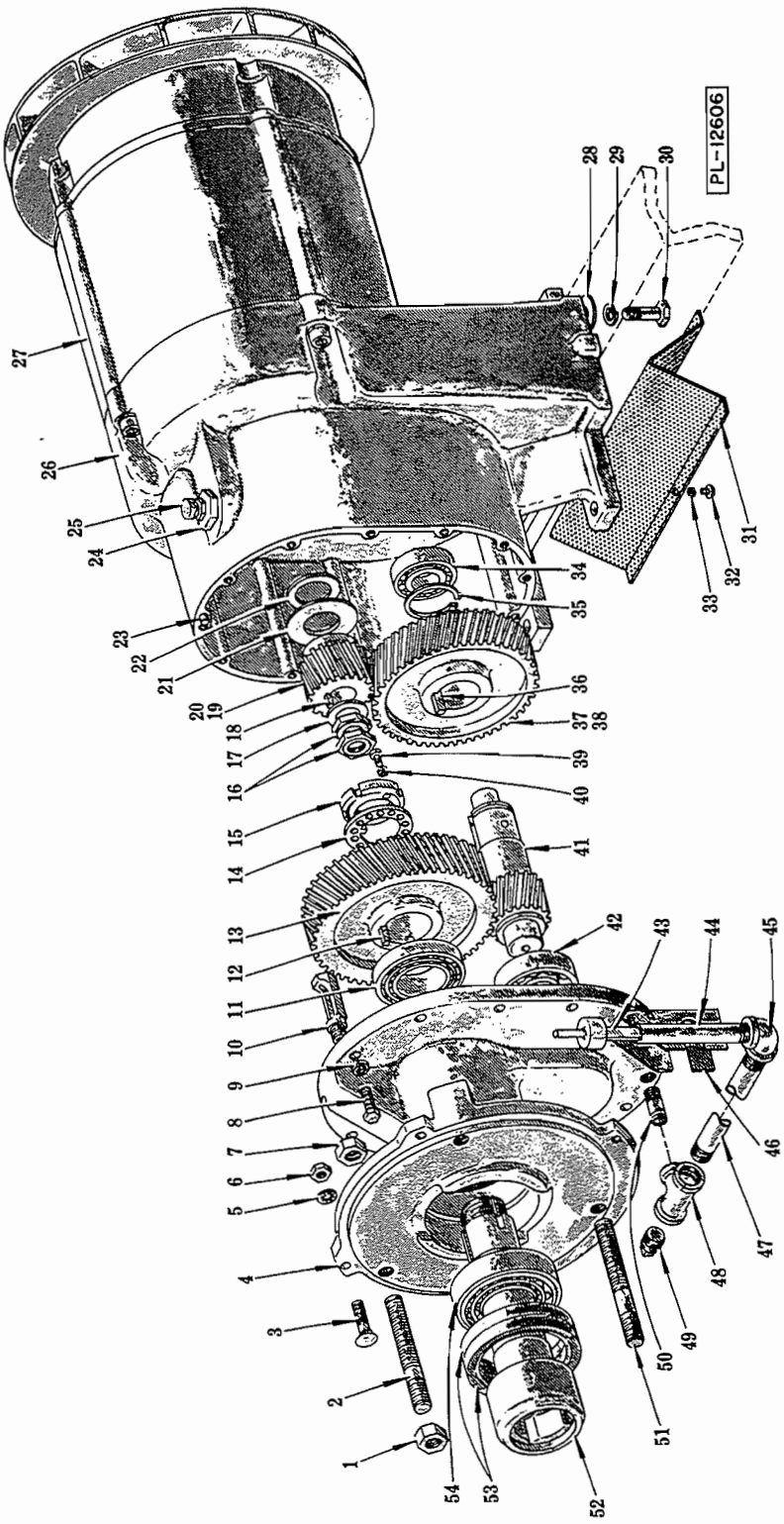

GEAR CASE UNIT

GEAR CASE UNIT (15 H.P.)
(GRINDER)

ILLUS. PL-12606	PART NO.	NAME OF PART	AMT.
1	NS-13-43	Full Nut - 5/8"-11 Hex Fin.	3
2	M-72981-2	Stud - Cylinder (4" Lg.)	2
3	SC-82-3	Carriage Bolt - 1/4"-20 x 1"	4
4	T-83807	Hub - Attachment (Grinder End)	1
5	WL-8-17	Lock Washer - 1/4" Int. Shakeproof	4
6	NS-13-2	Full Nut - 1/4"-20 Hex Fin.	4
7	NS-13-43	Full Nut - 5/8"-11 Hex Fin.	3
8	SC-62-24	Fin. Bolt - 5/16"-18 x 1-1/2" Hex Hd.	12
9	WL-3-45	Lock Washer - 5/16" x .143" x .108"	12
10	M-68963	Oil Return - Roller Bearing	1
11	BR-2-19	Roller Bearing - Cup & Cone Assy.	1
12	M-69572	Key	1
13	P-68953	Gear - Chopper Drive (56T)	1
14	M-64982	Washer - Tongue	1
15	M-65275	Lock Nut - Special	1
16	V-6566	Lock Nut	2
17	WS-11-24	Washer	1
18	C-109070-17	Key	1
19	C-85812-1	Gear - Motor Pinion (24T)	1
20	C-85812-2	Gear - Motor Pinion (29T) (High Speed)	1
21	M-72536	Flinger - Oil	1
22	M-72537	Spacer - Oil Flinger	1
23	D-11800-239	Dowel	2
24	M-83804	Bushing - Air Vent	1
25	M-83805	Vent - Air	1
26	T-85852-1	Case - Gear	1
27	---	Motor (see separate Motor Parts Sheet)	1
28	WS-18-19	Washer	2
29	WL-4-4	Lock Washer - 3/8" x .136" x .070"	2
30	SC-62-22	Fin. Bolt - 3/8"-16 x 1-1/4" Hex Hd.	2
31	S-68853	Screen - Air Inlet	1
32	SC-60-21	Mach. Screw - #10-24 x 1/4" Rd. Hd.	2
33	WL-3-20	Lock Washer - #10 x .055" x .040"	2
34	BB-18-33	Ball Bearing - Fafnir #205K	1
35	RR-6-14	Retaining Ring	1
36	R-12430-214	Key	1
37	C-68954-1	Gear - Main Drive (65T)	1
38	C-68954-2	Gear - Main Drive (60T) (High Speed)	1
39	M-65277	Cap Screw - Soc. Fil. Hd.	1
40	WL-3-15	Lock Washer - #8 x .047" x .031"	1
41	R-68951	Pinion - Countershaft (19T)	1
42	BB-7-21	Ball Bearing - Fafnir #207K	1
43	M-69477-3	Dip Stick & Fill Cap Assy.	1
44	M-70683	Pipe - Oil Level	1
45	FP-14-1	Elbow - 3/8" x 90°	1
46	P-86972	Bracket - Oil Pipe Support	1
47	FP-37-22	Nipple - 3/8" x 7" Lg. (T.B.E.)	1
48	M-70677	Tee - 3/8" x 3/8" x 1/4" Reducing	1
49	FP-28-9	Plug - 3/8" Sq. Hd. Pipe	1
50	FP-37-5	Nipple - 1/4" x 1" Lg. (T.B.E.)	1
51	M-72981-1	Stud - Cylinder (4-1/2" Lg.)	1
52	R-68909	Shaft - Square Drive	1
53	M-72535	Seal	2
54	BR-2-18	Roller Bearing - Cup & Cone Assy.	1

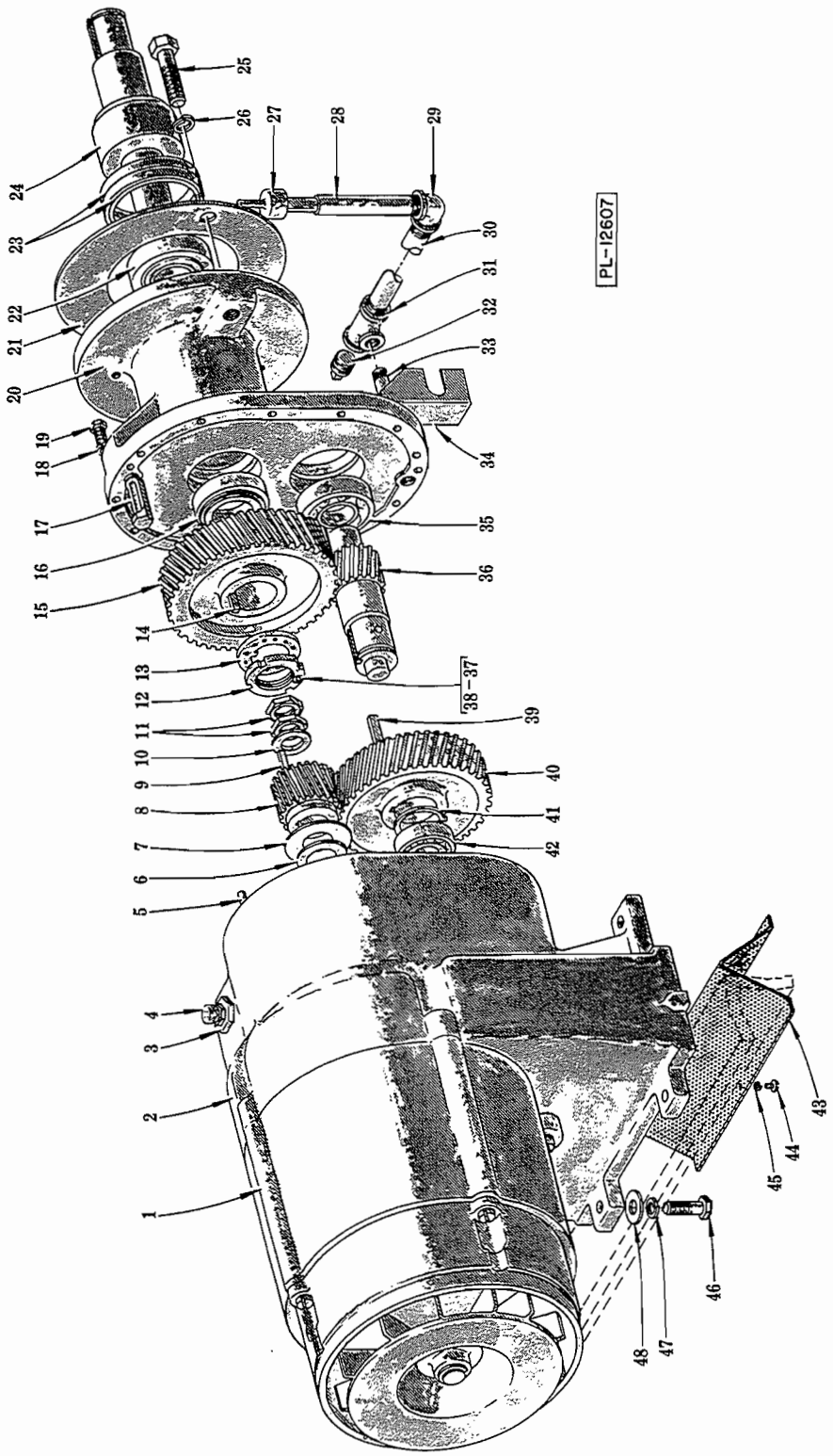

GEAR CASE UNIT

GEAR CASE UNIT (5 H.P.)
(CONVEYOR SCREW AND MIXING ARMS)

ILLUS. PL-12607	PART NO.	NAME OF PART	AMT.
1	---	Motor (see separate Motor Parts Sheet)	1
2	T-85852-1	Case - Gear	1
3	M-83804	Bushing - Air Vent	1
4	M-83805	Vent - Air	1
5	D-11800-239	Dowel	2
6	M-72537	Spacer - Oil Flinger	1
7	M-72536	Flinger - Oil	1
8	C-85812-1	Gear - Motor Pinion (24T)	1
9	C-109070-17	Key	1
10	WS-11-24	Washer	1
11	V-6566	Lock Nut	2
12	M-65275	Lock Nut - Special	1
13	M-64982	Washer - Tongue	1
14	R-12430-210	Key	1
15	P-69833	Gear - Chopper Drive (56T)	1
16	BR-2-20	Roller Bearing - Cup & Cone Assy.	1
17	M-68963	Oil Return - Roller Bearing	1
18	WL-3-45	Lock Washer - 5/16" x .143" x .108"	12
19	SC-62-24	Fin. Bolt - 5/16"-18 x 1-1/2" Hex Hd.	12
20	T-69767	Hub - Attachment (Sprocket End)	1
21	P-83788	Gasket - Attachment Hub	1
22	BR-2-21	Roller Bearing - Cup & Cone Assy.	1
23	M-69490	Seal - Square Drive	2
24	S-85512	Shaft - Sprocket Drive	1
25	SC-62-23	Fin. Bolt - 5/8"-11 x 2" Hex Hd.	2
26	WL-4-17	Lock Washer - 5/8" x .201" x .126"	2
27	M-69477-3	Dip Stick & Fill Cap Assy.	1
28	M-70683	Pipe - Oil Level	1
29	FP-14-1	Elbow - 3/8" x 90°	1
30	FP-37-22	Nipple - 3/8" x 7" Lg. (T.B.E.)	1
31	M-70677	Tee - 3/8" x 3/8" x 1/4" Reducing	1
32	FP-28-9	Plug - 3/8" Sq. Hd. Pipe	1
33	FP-37-5	Nipple - 1/4" x 1" Lg. (T.B.E.)	1
34	P-86972	Bracket - Oil Pipe Support	1
35	BB-7-21	Ball Bearing - Fafnir #207K	1
36	R-69836	Pinion - Countershaft (19T)	1
37	M-65277	Cap Screw - Soc. Fil. Hd.	1
38	WL-3-15	Lock Washer - #8 x .047" x .031"	1
39	R-12430-214	Key	1
40	C-68954-1	Gear - Main Drive (65T)	1
41	RR-6-14	Retaining Ring	1
42	BB-18-33	Ball Bearing - Fafnir #205K	1
43	S-68853	Screen - Air Inlet	1
44	SC-60-21	Mach. Screw - #10-24 x 1/4" Rd. Hd.	2
45	WL-3-20	Lock Washer - #10 x .055" x .040"	2
46	SC-62-22	Fin. Bolt - 3/8"-16 x 1-1/4" Hex Hd.	2
47	WL-4-4	Lock Washer - 3/8" x .136" x .070"	2
48	WS-18-19	Washer	2

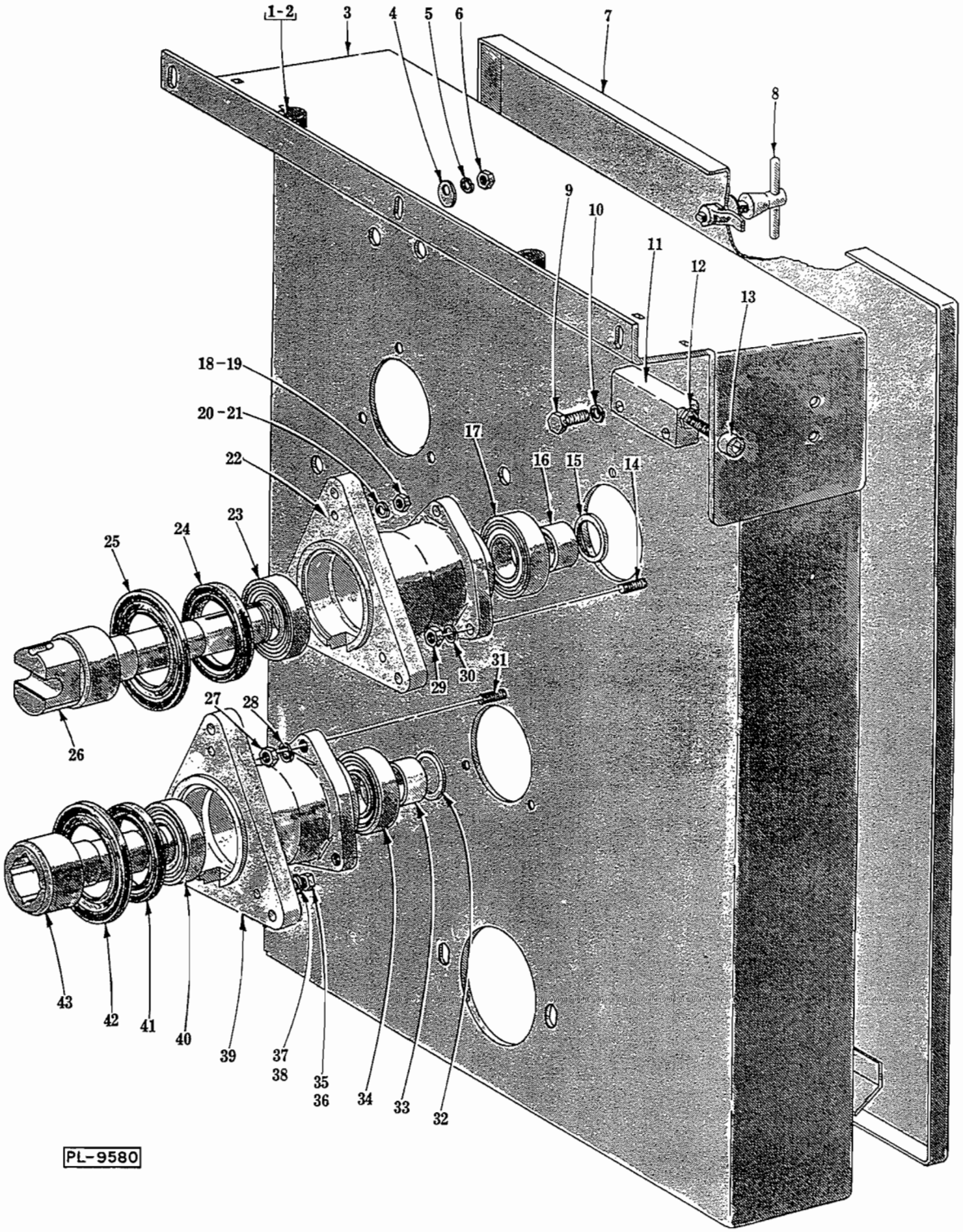

SPROCKET DRIVE CASE UNIT

SPROCKET DRIVE CASE UNIT

ILLUS. PL-9580	PART NO.	NAME OF PART	AMT.
1	M-18682	Bumper - Rubber	2
2	WS-24-1	Washer	2
3	T-87262	Sprocket Drive Case Assy.	1
4	M-85129	Washer - Eccentric	3
5	WL-4-4	Lock Washer - 3/8" x .136" x .070"	3
6	NS-13-25	Full Nut - 3/8"-16 Hex Fin.	3
7	S-86415	Cover - Hopper Drive Case	1
8	P-86409	Fastener - "T" Handle Pawl	1
9	SC-90-1	Fin. Bolt - 1/2"-13 x 2" Hex Hd.	2
10	WL-4-11	Lock Washer - 1/2" x .171" x .125"	2
11	M-87206	Block - Rear Adjustable	1
12	NS-13-33	Full Nut - 1/2"-13 Hex Fin.	1
13	SC-40-82	Cap Screw - 1/2"-13 x 2-1/2" Soc. Fil. Hd.	1
14	M-89235	Bolt - Special	6
15	M-89412	Washer - Sprocket Spacing	As Reqd.
16	M-89367	Sleeve - Spacing	2
17	BB-20-13	Ball Bearing (MRC #308SZZ)	2
18	NS-13-25	Full Nut - 3/8"-16 Hex Fin. (With 3/8" Stud)	6
19	NS-13-33	Full Nut - 1/2"-13 Hex Fin. (With 1/2" Stud)	6
20	WL-4-4	Lock Washer - 3/8" x .136" x .070" (With 3/8" Stud)	6
21	WL-4-41	Lock Washer - 1/2" x .170" x .099" (With 1/2" Stud)	6
22	S-108576	Carrier - Bearing (Mixing Arm)	2
23	BB-20-11	Ball Bearing (MRC #209SZZ)	2
24	M-72535	Seal - Outer	2
25	M-83783	Seal - Inner	2
26	R-89302	Shaft - Mixing Arm Drive	2
27	NS-13-33	Full Nut - 1/2"-13 Hex Fin.	3
28	WL-4-11	Lock Washer - 1/2" x .171" x .125"	3
29	NS-13-33	Full Nut - 1/2"-13 Hex Fin.	6
30	WL-4-11	Lock Washer - 1/2" x .171" x .125"	6
31	M-89235	Bolt - Special	3
32	M-89412	Washer - Sprocket Spacing	As Reqd.
33	M-89367	Sleeve - Spacing	1
34	BB-20-13	Ball Bearing (MRC #308SZZ)	1
35	NS-13-25	Full Nut - 3/8"-16 Hex Fin. (With 3/8" Stud)	3
36	NS-13-33	Full Nut - 1/2"-13 Hex Fin. (With 1/2" Stud)	3
37	WL-4-4	Lock Washer - 3/8" x .136" x .070" (With 3/8" Stud)	3
38	WL-4-41	Lock Washer - 1/2" x .170" x .099" (With 1/2" Stud)	3
39	S-108576	Carrier - Bearing (Conveyor Screw)	1
40	BB-20-11	Ball Bearing (MRC #209SZZ)	1
41	M-72535	Seal - Outer	1
42	M-83783	Seal - Inner	1
43	R-89418	Shaft - Conveyor Square Drive	1
	S-108813-2	Bearing Carrier Sub-Assy. (Mixing Arm) (Incls. items #17, 22, 23, 24 & 26)	2
	S-108814-2	Bearing Carrier Sub-Assy. (Conveyor Screw) (Incls. items #34, 39, 40, 41 & 43)	1

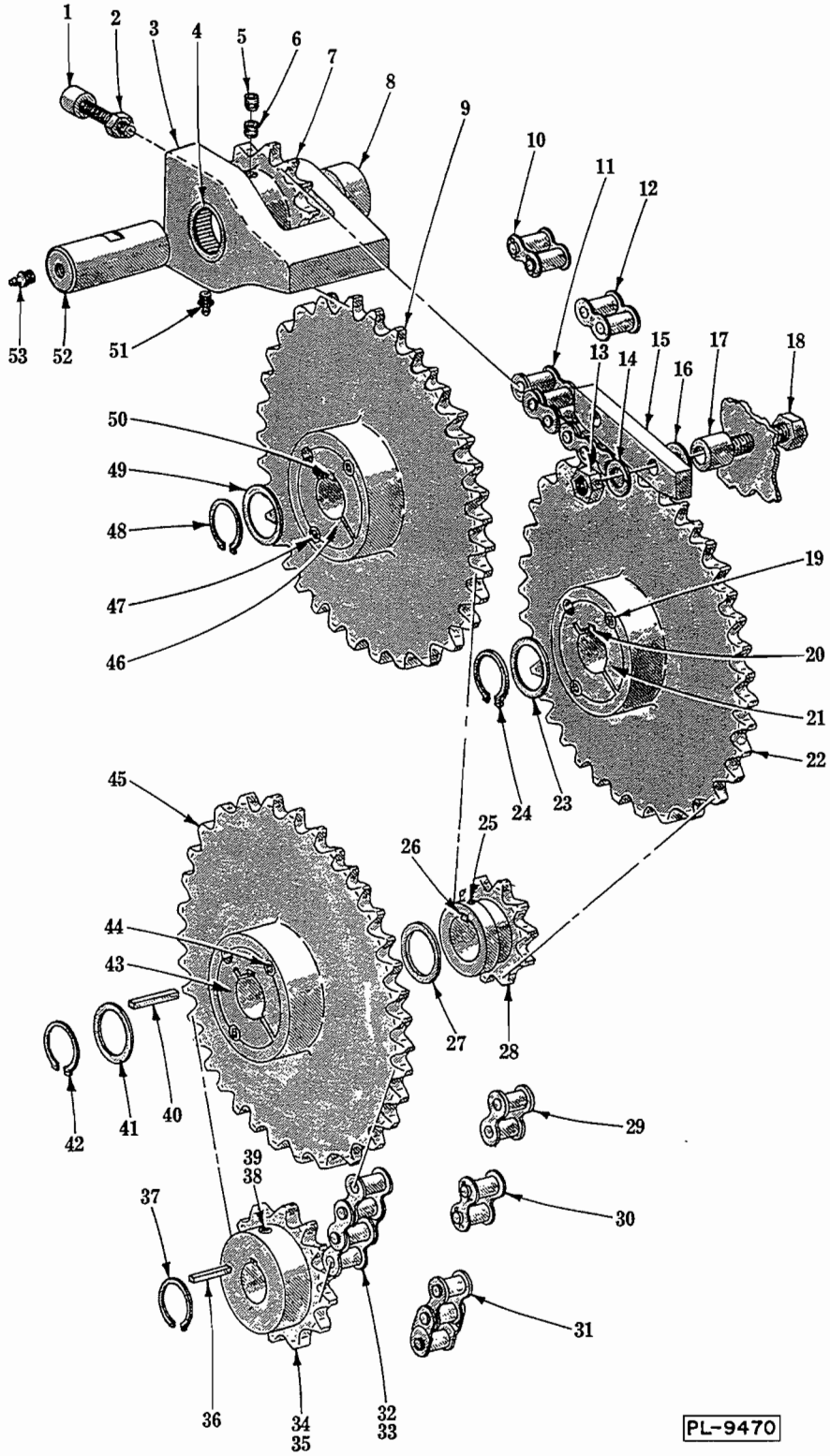

SPROCKET DRIVE UNIT

SPROCKET DRIVE UNIT

ILLUS. PL-9470	PART NO.	NAME OF PART	AMT.
1	SC-40-82	Cap Screw - 1/2"-13 x 2-1/2" Soc. Fil. Hd.	2
2	NS-13-33	Full Nut - 1/2"-13 Hex Fin.	2
3	R-87909	Idler Sprocket Support & Needle Bearing Sub-Assy. (Incls. items #4 & 8)	1
4	BN-2-19	Bearing - Needle (Torrington #B-2414-OH)	1
5	SC-64-18	Set Screw - 1/2"-13 x 1/2" Soc. Hdls., Cup Pt. "Nylok"	1
6	SC-47-59	Set Screw - 1/2"-13 x 1/2" Soc. Hdls., Kn. Cup Pt.	1
7	P-84985	Sprocket (13T) (Idler)	1
8	BN-2-20	Bearing - Needle (Torrington #M-24141)	1
9	D-102484	Sprocket Assy. (37T) (Driven, Mixing Arm) (Incls. item #46)	1
10	M-86204	Link - Connecting (#80 H)	As Reqd.
11	M-101195	Chain - Mixing Arm Drive (84 P)	1
12	M-86203	Link - Roller (#80 H)	As Reqd.
13	NS-13-43	Full Nut - 5/8"-11 Hex Fin.	6
14	WL-4-17	Lock Washer - 5/8" x .201" x .126"	6
15	P-89842	Block - Chain Guide	3
16	WS-10-41	Washer	As Reqd.
17	M-89844	Spacer	6
18	SC-90-53	Fin. Bolt - 5/8"-11 x 2-3/4" Hex Hd.	6
19	SC-88-58	Set Screw - 1/2"-13 x 1" Soc. Hdls., Oval Pt.	2
20	M-104067	Key	1
21	B-105286	Bushing - Taper Lock (Incls. item #19)	1
22	D-102484	Sprocket Assy. (37T) (Driven, Mixing Arm) (Incls. item #21)	1
23	M-89412	Washer - Sprocket Spacing	As Reqd.
24	RR-7-17	Retaining Ring	1
25	SC-47-32	Set Screw - 5/16"-18 x 5/16" Soc. Hdls., Cup Pt.	1
26	M-89426	Key	1
27	M-89412	Washer - Sprocket Spacing	As Reqd.
28	P-101194	Sprocket (10T) (Driven, Mixing Arm) (Incls. item #25)	1
29	M-86200	Link - Roller (#80)	As Reqd.
30	M-86201	Link - Connecting (#80)	As Reqd.
31	M-86202	Link - Two Pitch Offset (#80)	As Reqd.
32	M-101193	Chain - Conveyor Drive (47 P) (Standard)	1
33	B-102540	Chain - Conveyor Drive (49 P) (High Speed)	1
34	P-101192	Sprocket (14T) (Motor Drive) (Standard) (Incls. item #38)	1
35	C-102539	Sprocket (19T) (Motor Drive) (High Speed) (Incls. item #39)	1
36	M-87922	Key	1
37	RR-6-8	Retaining Ring	1
38	SC-47-34	Set Screw - 5/16"-18 x 1/2" Soc. Hdls., Cup Pt. (Standard)	1
39	SC-47-97	Set Screw - 5/16"-18 x 1" Soc. Hdls., Cup Pt. (High Speed)	1
40	M-104067	Key	1
41	M-89412	Washer - Sprocket Spacing	As Reqd.
42	RR-7-17	Retaining Ring	1
43	B-105286	Bushing - Taper Lock (Incls. item #44)	1
44	SC-88-58	Set Screw - 1/2"-13 x 1" Soc. Hdls., Oval Pt.	2
45	D-102484	Sprocket Assy. (37T) (Driven, Conveyor Screw) (Incls. item #43)	1
46	B-105286	Bushing - Taper Lock (Incls. item #47)	1
47	SC-88-58	Set Screw - 1/2"-13 x 1" Soc. Hdls., Oval Pt.	2
48	RR-7-17	Retaining Ring	1
49	M-89412	Washer - Sprocket Spacing	As Reqd.
50	M-104067	Key	1
51	OG-3-49	Oiler - 1/8" Pipe Thd.	1
52	P-84982	Shaft - Idler Support	1
53	OG-3-49	Oiler - 1/8" Pipe Thd.	1
	R-87331-1	Idler Sub-Assy. (Incls. items #3, 5, 6, 7, 51, 52 & 53)	1

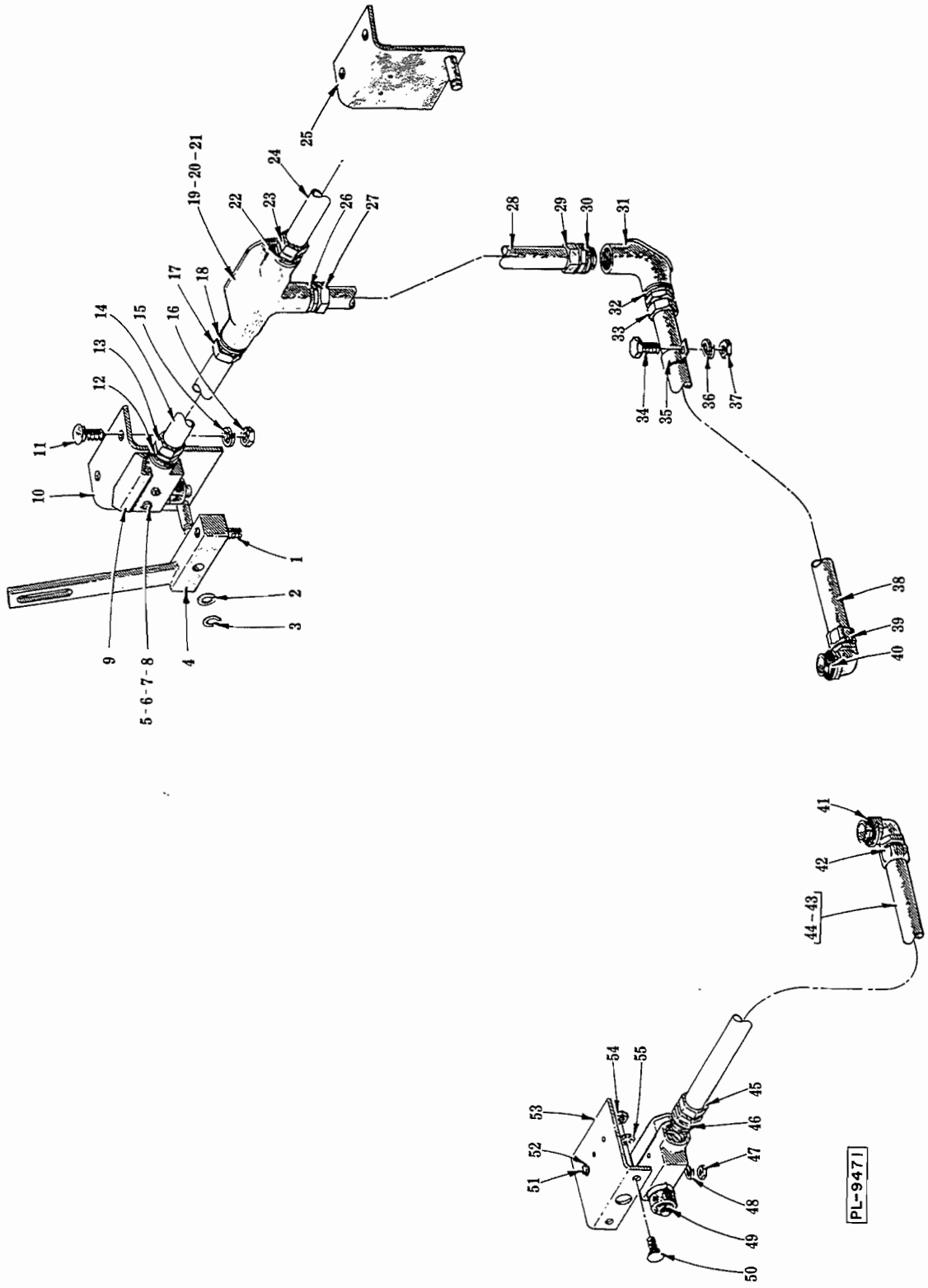

INTERLOCK UNIT

INTERLOCK UNIT

ILLUS. PL-9471	PART NO.	NAME OF PART	AMT.
1	SC-49-19	Set Screw - 1/2"-13 x 3/4" Hdls., Flat Pt.	2
2	WS-8-50	Washer	2
3	RR-4-17	Retaining Ring	2
4	P-85187	Switch Actuator Sub-Assy.	2
5	SC-27-24	Mach. Screw - #6-32 x 1-1/2" Rd. Hd.	4
6	WS-2-6	Washer	8
7	WL-6-40	Lock Washer - #6 x .040" x .025"	4
8	NS-10-6	Mach. Nut - #6-32 Hex	4
9	M-85616	Switch - Interlock (Incls. items #5, 6 & 8)	2
10	P-85191	Switch Bracket Assy. (L.H.)	1
11	SC-82-2	Carriage Bolt - 3/8"-16 x 1"	4
12	FE-8-10	1/2" Gasket Assy.	1
13	FE-6-45	Connector - Straight (1/2" Male Thd. x 1/2" Thinwall)	1
14	P-67572-42	Conduit - 1/2" x 8-1/2" (Thinwall) (Interlock Switch to Conduit Box)	1
15	WL-4-4	Lock Washer - 3/8" x .136" x .070"	4
16	NS-13-25	Full Nut - 3/8"-16 Hex Fin.	4
17	FE-6-45	Connector - Straight (1/2" Male Thd. x 1/2" Thinwall)	1
18	FE-8-10	1/2" Gasket Assy.	1
19	FE-3-18	Conduit Box (1/2" x 1/2" x 1/2")	1
20	FE-4-18	Cover - Conduit Box	1
21	FE-8-35	Gasket	1
22	FE-8-10	1/2" Gasket Assy.	2
23	FE-6-45	Connector - Straight (1/2" Male Thd. x 1/2" Thinwall)	2
24	P-67572-42	Conduit - 1/2" x 8-1/2" (Thinwall) (Interlock Switch to Conduit Box)	1
25	P-85190	Switch Bracket Assy. (R.H.)	1
26	FE-8-10	1/2" Gasket Assy.	1
27	FE-6-45	Connector - Straight (1/2" Male Thd. x 1/2" Thinwall)	1
28	R-84784	Conduit - 1/2" (Thinwall) (Conduit Box to Pulling Ell)	1
29	FE-6-45	Connector - Straight (1/2" Male Thd. x 1/2" Thinwall)	1
30	FE-8-10	1/2" Gasket Assy.	1
31	FE-6-52	Ell - 90° x 1/2" Pulling	1
32	FE-8-10	1/2" Gasket Assy.	1
33	FE-6-45	Connector - Straight (1/2" Male Thd. x 1/2" Thinwall)	1
34	SC-37-87	Fin. Bolt - 1/4"-20 x 1" Hex Hd.	1
35	FE-6-47	Clamp - 1/2" Conduit	1
36	WL-3-36	Lock Washer - 1/4" x .107" x .047"	1
37	NS-13-2	Full Nut - 1/4"-20 Hex Fin.	1
38	R-84782	Conduit - 1/2" (Thinwall) (Pulling Ell to Control Box)	1
39	FE-6-37	Ell - 90° Short (1/2" Male Thd. x 1/2" Thinwall)	1
40	FE-8-10	1/2" Gasket Assy.	1
41	FE-8-10	1/2" Gasket Assy.	1
42	FE-6-37	Ell - 90° Short (1/2" Male Thd. x 1/2" Thinwall)	1
43	R-84785	Conduit - 1/2" (Thinwall) (Control Box to Interlock Switch) (R.H.)	1
44	R-84786	Conduit - 1/2" (Thinwall) (Control Box to Interlock Switch) (L.H.)	1
45	FE-6-45	Connector - Straight (1/2" Male Thd. x 1/2" Thinwall)	1
46	FE-8-10	1/2" Gasket Assy.	1
47	NS-10-6	Mach. Nut - #6-32 Hex	2
48	WL-6-40	Lock Washer - 1/4" Int. Shakeproof	2
49	M-85616	Switch - Interlock (Incls. items #47, 51 & 52)	1
50	SC-82-4	Carriage Bolt - 1/4"-20 x 3/4"	2
51	SC-27-24	Mach. Screw - #6-32 x 1-1/2" Rd. Hd.	2
52	WS-2-6	Washer	4
53	P-83818	Bracket - Interlock Switch (Front)	1
54	NS-13-2	Full Nut - 1/4"-20 Hex Fin.	2
55	WL-8-17	Lock Washer - #6 x .040" x .025"	2

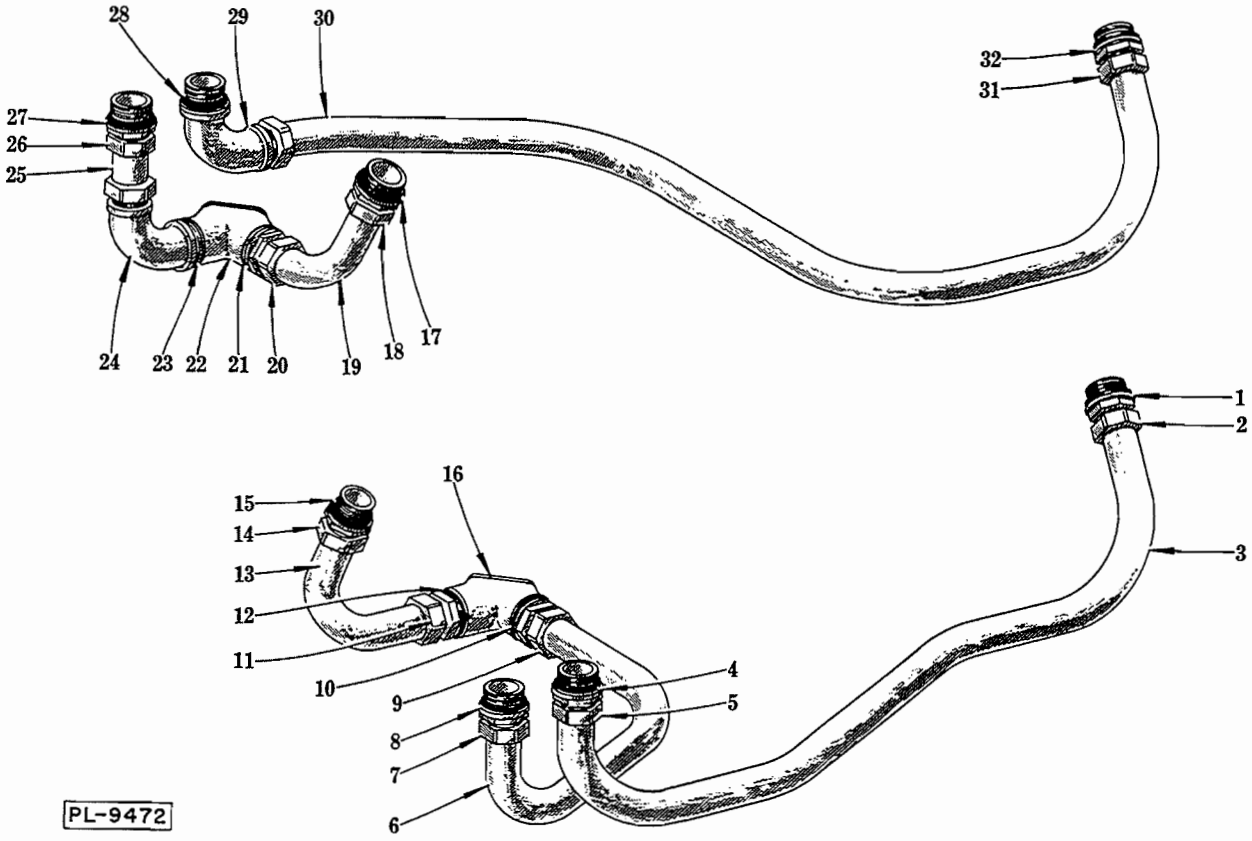

CONDUIT (MOTOR TO CONTROL BOX)

CONDUIT (MOTOR TO CONTROL BOX)

ILLUS. PL-9472	PART NO.	NAME OF PART	AMT.
*1	FE-8-11	3/4" Gasket Assy.	1
*2	FE-7-32	Connector - Straight (3/4" Male Thd. x 3/4" Thinwall)	1
*3	S-84787	Conduit - 3/4" (Thinwall) (Sprocket Motor to Control Box)	1
*4	FE-8-11	3/4" Gasket Assy.	1
*5	FE-7-32	Connector - Straight (3/4" Male Thd. x 3/4" Thinwall)	1
*6	R-84783	Conduit - 3/4" (Thinwall) (Pulling Ell to Control Box)	1
*7	FE-7-32	Connector - Straight (3/4" Male Thd. x 3/4" Thinwall)	1
*8	FE-8-11	3/4" Gasket Assy.	1
*9	FE-7-32	Connector - Straight (3/4" Male Thd. x 3/4" Thinwall)	1
*10	FE-8-11	3/4" Gasket Assy.	1
*11	FE-7-32	Connector - Straight (3/4" Male Thd. x 3/4" Thinwall)	1
*12	FE-8-11	3/4" Gasket Assy.	1
*13	P-84781	Conduit - 3/4" (Thinwall) (Grinder Motor to Pulling Ell)	1
*14	FE-7-32	Connector - Straight (3/4" Male Thd. x 3/4" Thinwall)	1
*15	FE-8-11	3/4" Gasket Assy.	1
*16	FE-7-28	Ell - 90° x 3/4" Pulling	1
**17	FE-8-11	3/4" Gasket Assy.	1
**18	FE-7-32	Connector - Straight (3/4" Male Thd. x 3/4" Thinwall)	1
**19	P-84780	Conduit - 3/4" (Thinwall) (Grinder Motor to Pulling Ell)	1
**20	FE-7-32	Connector - Straight (3/4" Male Thd. x 3/4" Thinwall)	1
**21	FE-8-11	3/4" Gasket Assy.	1
**22	FE-7-28	Ell - 90° x 3/4" Pulling	1
**23	FE-8-11	3/4" Gasket Assy.	1
**24	FE-8-29	Ell - 90° Long (3/4" Male Thd. x 3/4" Thinwall)	1
**25	P-72654-13	Conduit - 3/4" x 2" (Thinwall) (Pulling Ell to Control Box)	1
**26	FE-7-32	Connector - Straight (3/4" Male Thd. x 3/4" Thinwall)	1
**27	FE-8-11	3/4" Gasket Assy.	1
**28	FE-8-11	3/4" Gasket Assy.	1
**29	FE-8-29	Ell - 90° Long (3/4" Male Thd. x 3/4" Thinwall)	1
**30	S-84788	Conduit - 3/4" (Thinwall) (Control Box to Sprocket Motor)	1
**31	FE-7-32	Connector - Straight (3/4" Male Thd. x 3/4" Thinwall)	1
**32	FE-8-11	3/4" Gasket Assy.	1

*R.H. Mounted Control Box.
**L.H. Mounted Control Box.

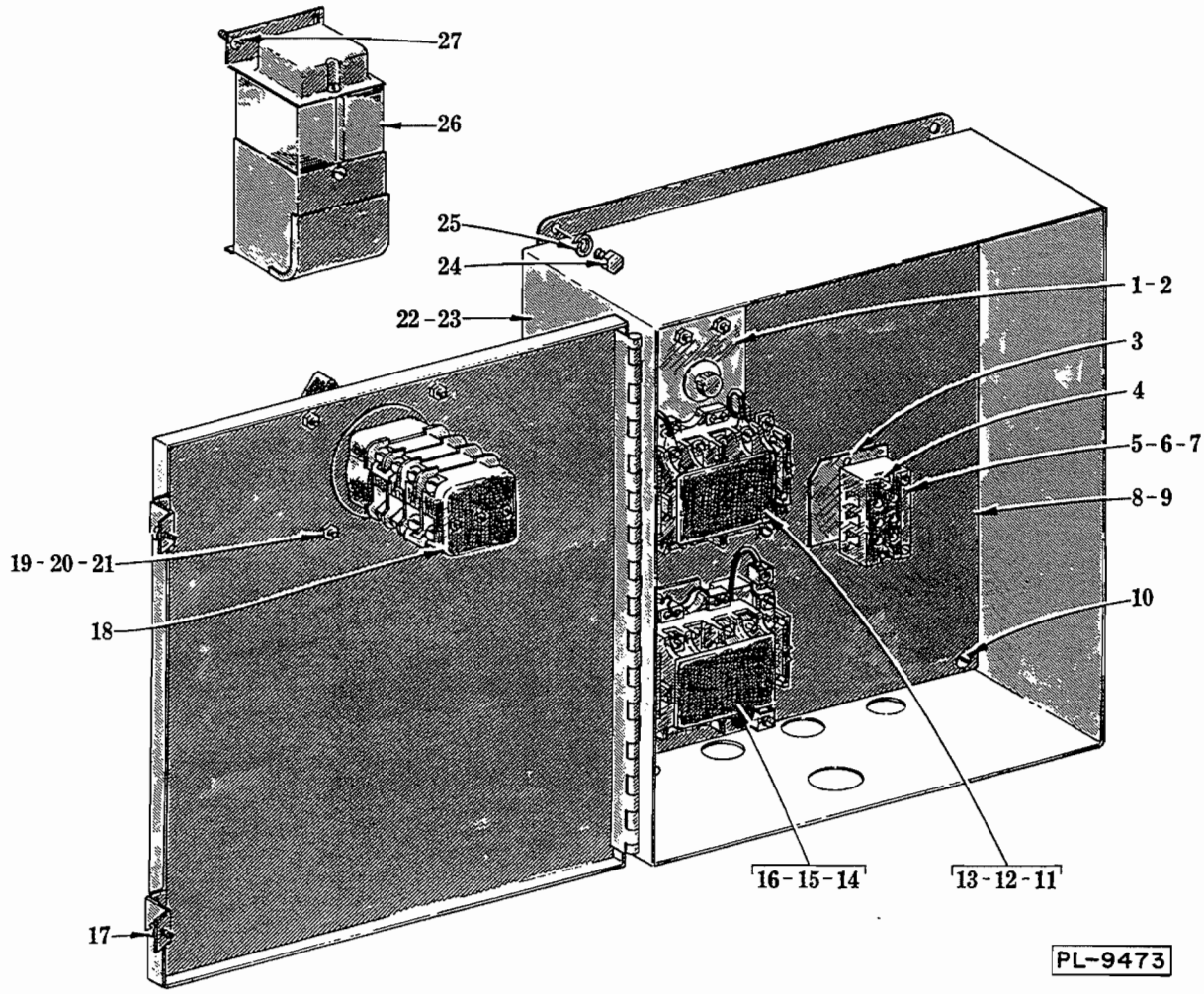

CONTROL BOX UNIT

CONTROL BOX UNIT

ILLUS. PL-9473	PART NO.	NAME OF PART	AMT.
1	M-86555	Timer Assy.	1
2	SC-7-33	Mach. Screw - #8-32 x 3/8" Rd. Hd.	2
3	M-82053	Insulator - Terminal Block	1
4	SC-9-55	Mach. Screw - #10-24 x 1-1/4" Rd. Hd.	2
5	P-77656	Terminal Block	1
6	P-87715-2-2	Switch - Panel Disconnect (Incls. item #7)	1
7	SC-9-28	Mach. Screw - #10-24 x 3/8" Rd. Hd.	4
8	R-83844-1	Panel - Control (W/Disconnect Switch)	1
9	R-83844-2	Panel - Control (Pilot Circuit Control) (W/O Disconnect Switch)	1
10	SD-9-12	Self-Tapping Screw - #10-32 x 3/8" Rd. Hd., Type F	4
**11	P-87712-19-1	Starter - Magnetic (Less Elements) (208-220 V., 3 Phase) (Mixer Motor)	1
**12	*	Heater Element - Magnetic Starter	As Reqd.
13	SC-9-28	Mach. Screw - #10-24 x 3/8" Rd. Hd.	3
**14	P-87819	Magnetic Starter & Label Assy. (Less Elements) (208-220 V., 3 Phase) (Grinder Motor)	1
**15	*	Heater Element - Magnetic Starter	As Reqd.
16	SC-9-28	Mach. Screw - #10-24 x 3/8" Rd. Hd.	3
17	SC-11-88	Mach. Screw - 1/4"-28 x 5/8" Fil. Hd.	2
18	P-87711-92-1	Switch - Start/Stop Selector	1
19	SC-11-75	Mach. Screw - 1/4"-20 x 5/8" Fil. Hd.	4
20	NS-13-2	Full Nut - 1/4"-20 Hex Fin.	4
21	WL-3-38	Lock Washer - 1/4" x .109" x .062"	4
22	R-81372-1	Box - Control (W/O Disconnect Switch) (Incls. items #10 & 17)	1
23	R-81372-2	Box - Control (W/Disconnect Switch) (Incls. items #10 & 17)	1
24	SC-62-53	Fin. Bolt - 1/4"-20 x 1/2" Hex Hd.	4
25	WL-3-38	Lock Washer - 1/4" x .109" x .062"	4
26	S-68437-1	Transformer (Pilot Circuit Control)	1
27	SC-7-33	Mach. Screw - #8-32 x 3/8" Rd. Hd.	3

* Hobart service technician to use Starter Element Part No. as listed on Starter Parts Sheet.

** Give Elec. Spec. & Mach. Model.

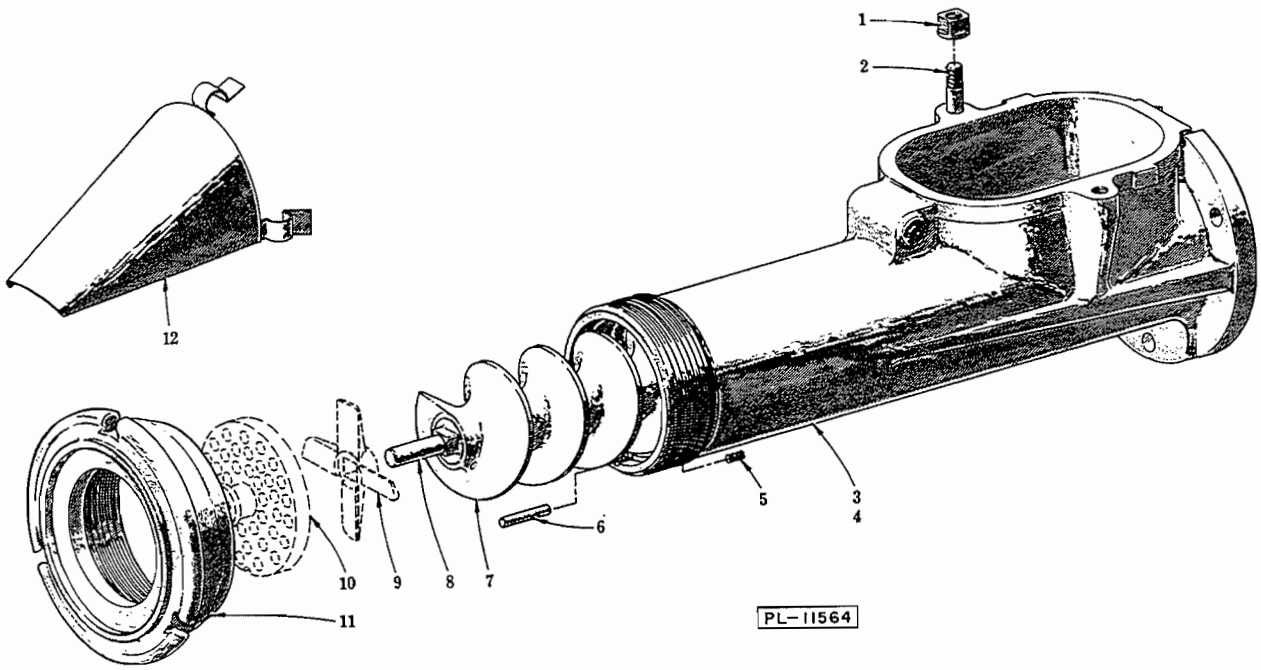

#56 GRINDER UNIT

ILLUS. PL-11564	PART NO.	NAME OF PART	AMT.
1	M-69862	Nut - Cylinder	2
2	M-83785	Stud - Conveyor Screw Chamber Mtg.	2
3	A-103254-1	Grinder Cylinder Sub-Assy. (Spiral Flute) (Incls. items #2, 5 & 6)	1
4	A-103254-3	Grinder Cylinder Sub-Assy. (Straight Flute) (Not Shown) (Incls. items #2, 5 & 6)	1
5	V-4313	Screw - Plate Pin Retaining	1
6	M-69474	Pin - Plate	1
7	S-78820-1	Worm Assy. (Incls. item #8)	1
8	R-70388	Stud	1
9	*	Knife - Grinder	1
10	*	Plate - Grinder	1
11	R-87299	Ring - Adjusting	1
12	R-80748	Deflector Assy.	1

*Sharp, high quality knives and plates should be purchased or rented for this grinder.

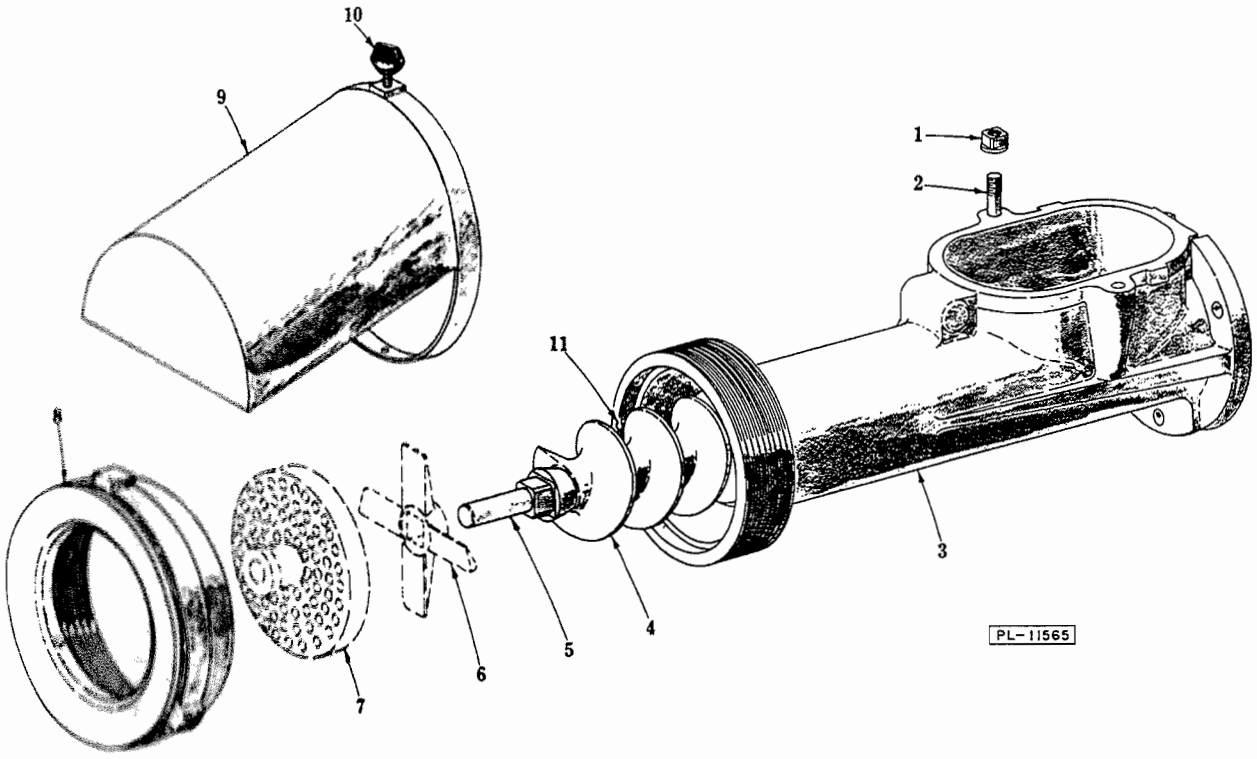

#66 GRINDER UNIT

ILLUS. PL-11565	PART NO.	NAME OF PART	AMT.
1	M-69862	Nut - Cylinder	2
2	M-83785	Stud - Conveyor Screw Chamber Mtg.	2
3	A-103254-2	Grinder Cylinder Sub-Assy. (Incls. items #2 & 11)	1
4	D-104213	Worm Assy. (Incls. item #5)	1
5	C-104039	Stud	1
6	*	Knife - Grinder	1
7	*	Plate - Grinder	1
8	D-103141	Ring - Adjusting	1
9	D-103293	Deflector Assy. (Incls. item #10)	1
10	C-108197-12	Thumb Screw	1
11	508722	Pin - Plate	1

* Sharp, high quality knives and plates should be purchased or rented for this grinder.

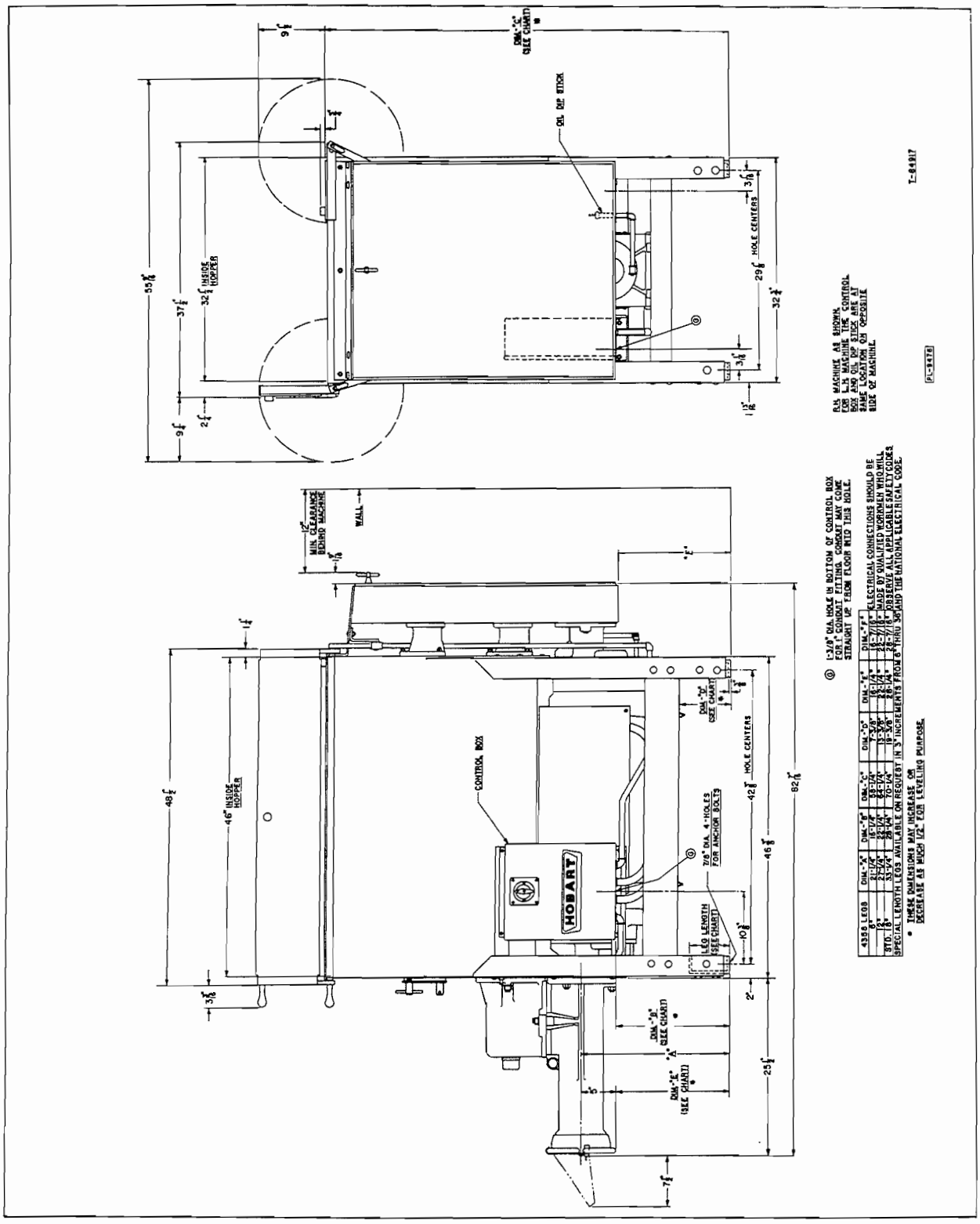

⑥ 1-3/4" DIA. HOLE IN BOTTOM OF CONTROL BOX FOR 3/4" CONDUIT FITTING. CONDUIT MAY COME STRAIGHT UP FROM FLOOR INTO THIS HOLE.

RH. MACHINE AS SHOWN. FOR L.H. MACHINE THE CONTROL BOX AND OIL DIP STICK ARE AT SAME LOCATION ON OPPOSITE SIDE OF MACHINE.

4356 LEGS	DIM. "A"	DIM. "B"	DIM. "C"	DIM. "D"	DIM. "E"	DIM. "F"
6"	21-3/4"	23-1/4"	8-1/4"	15-3/4"	18-1/4"	28-7/8"
8"	23-3/4"	25-1/4"	8-1/4"	17-3/4"	18-1/4"	28-7/8"
8,10,18"	33-3/4"	35-1/4"	10-1/4"	19-3/4"	28-1/4"	28-7/8"

SPECIAL LENGTH LEGS AVAILABLE ON REQUEST IN 3" INCREMENTS FROM 6" THRU 36"

* THESE DIMENSIONS MAY INCREASE OR DECREASE AS MUCH 1/2" FOR LEVELING PURPOSE.

ELECTRICAL CONNECTIONS SHOULD BE MADE BY QUALIFIED WORKMEN WHO WILL OBSERVE ALL APPLICABLE SAFETY CODES AND THE NATIONAL ELECTRICAL CODE.

INSTALLATION DIAGRAM