CATALOG OF REPLACEMENT PARTS



4246 MODEL MIXER-GRINDERS

STANDARD (5 HP./1 HP.)

4246S	ML-134220

HEAVY DUTY (7.5 HP./1 HP.)

4246HD	ML-134221

PRIOR MLS COVERED IN THIS MANUAL

STANDARD (5 HP./1HP.)

4246S	ML-038397
4246S	ML-134216

HEAVY DUTY (7.5 HP./1 HP.)

4246HD	ML-038401
4246HD	ML-134214

A product of HOBART 701 S. RIDGE AVENUE TROY, OHIO 45374-0001

FORM 16107 Rev. J (December 2024)

 © HOBART 2024

Table of Contents

5 CONTROL BOX
7 CONTROL PANEL (ML-38397 AND ML-38401)
9 CONTROL PANEL (ML-134214, ML-134216, ML-134220, & ML-134221)
11 OPERATOR'S PANEL (ML-38397 AND ML-38401)
13 OPERATOR'S PANEL (ML-134214, ML-134216, ML-134220, & ML-134221)
15 HOPPER AND FRAME
19 GRIND TRANSMISSION (PREVIOUS CONSTRUCTION)
21 GRIND TRANSMISSION (CURRENT CONSTRUCTION)
23 GRIND CONVEYOR AND MIXING ARM/TRANSMISSION
25 GRIND MOTOR/DRIVE UNIT
27 MIX ARM MOTOR/VENTILATING UNIT
29 FOOT SWITCH
31 #32 GRINDER
33 SIDE FEED

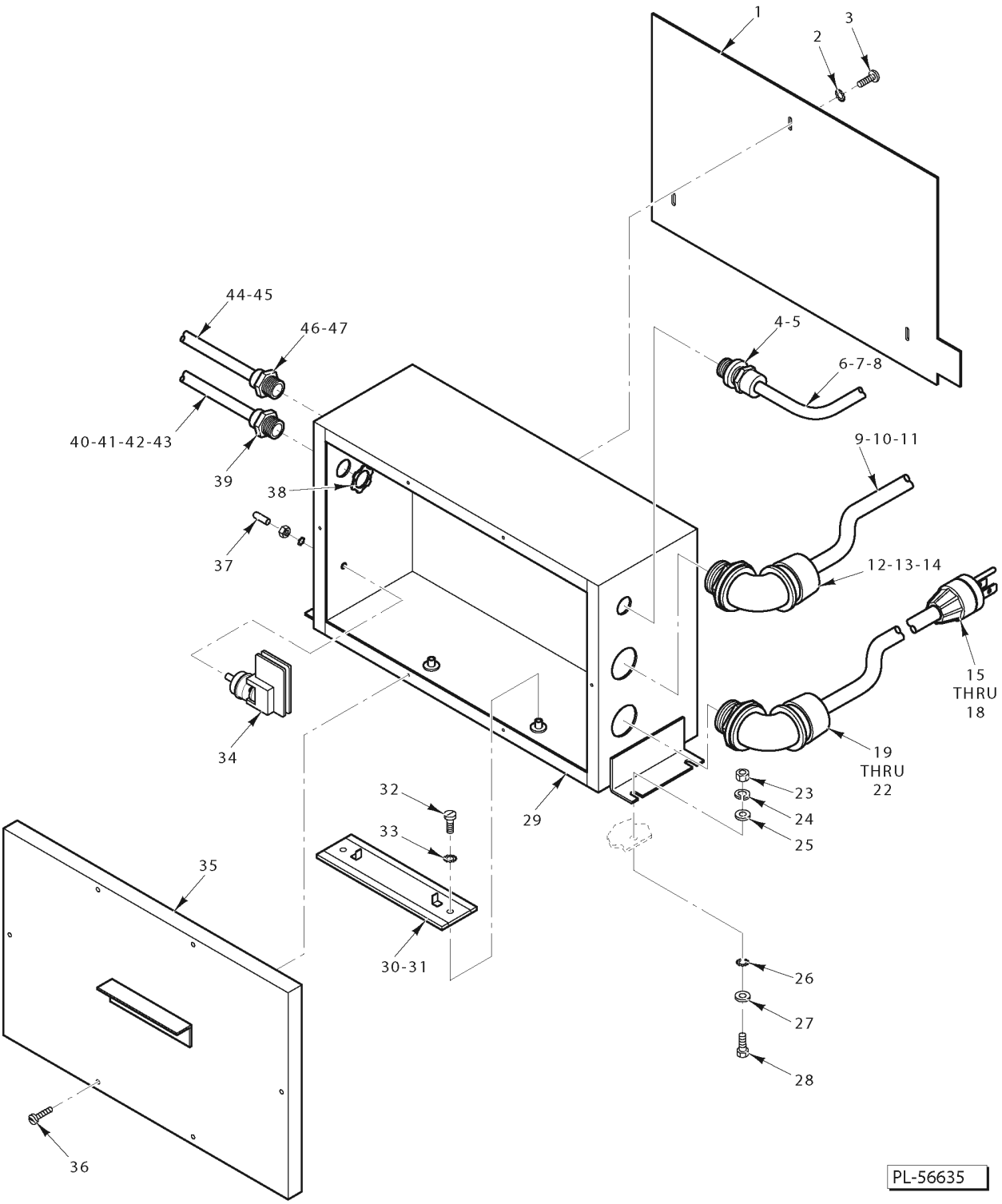
1
2
3
44-45
46-47
4-5
6-7-8
40-41-42-43
39
38
37
9-10-11
12-13-14
15
THRU
18
34
19
THRU
22
23
24
25
32
33
29
35
30-31
26
27
28
36
PL-56635

CONTROL BOX

CONTROL BOX

ILLUS. PL-56635	PART NO.	NAME OF PART	AMT.
1	00-292671	Panel - Air Deflector (3 Ph.)	1
2	WL-007-12	Lockwasher #10 External Shakeproof	3
3	SC-008-09	Mach. Screw 10-24 x 3/8 Rd. Hd	3
4	FE-022-84	Strain Relief	1
5	FE-024-88	Lock Nut Electrical 1/2	1
6	00-294853-00041	Cable - Mix Motor Control (ML-134214 & ML-134216)	1
7	00-294853-00002	Cable - Mix Motor Control (3 Ph.) (ML-38397 & ML-38401)	1
8	00-294853-00007	Cable - Mix Motor Control (1 Ph.) (ML-38397)	1
9	00-294853-00052	Cable - Grind Motor Control (ML-134214 & ML-134216)	1
10	00-294853-00001	Cable - Grind Motor Control (3 Ph.) (ML-38397 & ML-38401)	1
11	00-294853-00008	Cable - Grind Motor Control (1 Ph.) (ML-38397)	1
12	FE-023-41	Strain Relief	1
13	FE-006-50	Lock Nut Electrical 1	1
14	FE-008-12	Gasket - Electrical	1
15	00-478551-00001	Cord/Plug Assy. (208 V., 3 Ph.)	1
16	00-478551-00002	Cord/Plug Assy. (240 V., 3 Ph.)	1
17	00-117612-00016	Cord/Plug Assy. (480 V., 3 Ph.)	1
18	00-294899-00001	Cord/Plug Assy. (208-240 V., 1 Ph.)	1
19	FE-023-42	Strain Relief (208 V., 3 Ph.; 208-240 V., 1 Ph.)	1
20	FE-023-41	Strain Relief (380-415 V., 50 Hz., 3 Ph.; 240-480 V., 60 Hz., 3 Ph.)	1
21	FE-006-50	Lock Nut Electrical 1	1
22	FE-008-12	Gasket - Electrical	1
23	NS-015-01	Nut Hex 1/4-20	4
24	WL-006-17	Lockwasher 1/4 Helical	4
25	WS-017-06	Washer (SST)	4
26	WS-017-06	Washer (SST)	4
27	WL-007-16	Lockwasher 1/4 External Shakeproof	4
28	SC-041-01	Cap Screw 1/4-20 x 3/4 Hex Hd	4
29	00-186704-00001	Box Wldt. - Lower Control	1
30	00-478220-00001	Heater (208 V.) (ML-134214 & ML-134216)	1
31	00-478220-00002	Heater (240 V.) (ML-134214)	1
32	SC-018-11	Mach. Screw 10-24 x 3/8 Slotted Pan Hd	2
33	WL-007-12	Lockwasher #10 External	2
34	00-087711-213-1	Switch - Air Activated	1
35	00-186771	Lid & Gasket Assy	1
36	SD-036-39	Self-Tapping Screw 10-24 x 3/8 Truss Hd., Type TT	6
37	00-294855-00001	Cap	1
38	FE-024-88	Lock Nut Electrical 1/2	1
39	FE-022-84	Relief - Strain, Electrical	1
40	00-294853-00051	Cable - Interlock Switch (ML-134214 & ML-134216)	1
41	00-294853-00003	Cable - Interlock Switch (3 Ph.) (ML-38397 & ML-38401)	1
42	00-294853-00009	Cable - Interlock Switch (1 Ph.) (ML-38397)	1
43	00-294853-00038	Cable - Interlock Switch (ML-134214 & ML-134216)	1
44	00-294853-00004	Cable - Interlock Switch (3 Ph.) (ML-38397 & ML-38401)	1
45	00-294853-00006	Cable - Interlock Switch (1 Ph.) (ML-38397)	1
46	FE-022-84	Strain Relief	1
47	FE-024-88	Lock Nut Electrical 1/2	1

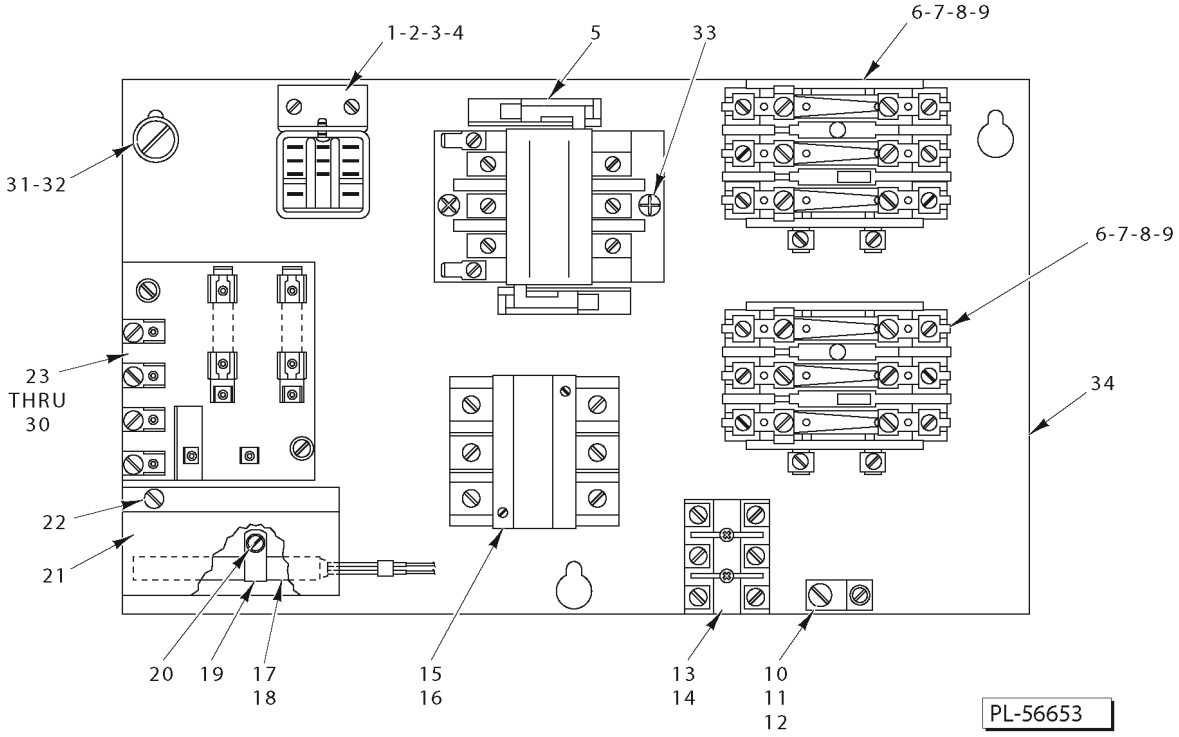

CONTROL PANEL
(ML-38397 AND ML-38401)

CONTROL PANEL
(ML-38397 AND ML-38401)

ILLUS. PL-56653	PART NO.	NAME OF PART	AMT.
1	00-087714-020-3	Relay - 3 P.D.T. (240VAC)	1
2	00-087714-020-5	Relay 3 P.D.T. (208VAC)	1
3	00-186748	Relay Mounting	1
4	SD-009-24	Self-Tapping Screw 6-32 x 3/8 Slotted Rd. Hd., Type F	4
5	00-087713-030-1	Contactor	1
6	SD-009-08	Self-Tapping Screw 8-32 x 3/8 Slotted Bndg. Hd., Type F	4
7	00-088196-009-1	Relay - Thermal Overload (3 Ph.)	2
8	00-088196-006-1	Relay - Thermal Overload (1 Ph.) (W/Overload Protection)	2
9		Heater Elements (Give Elec. Spec.)	AR
10	00-118544-00001	Lug - Solderless	1
11	SD-009-12	Self-Tapping Screw 10-32 x 3/8 Slotted Rd. Hd., Type F	1
12	WL-007-12	Lockwasher #10 External Shakeproof	AR
13	00-294325-003-1	Block - Terminal	AR
14	SD-029-11	Self-Tapping Screw 6-32 x 1 Phil. Pan Hd., Type F	2
15	00-087713-071-1	Contactor (50A, 3 Pole, 2 Side Switches)	1
16	SD-009-08	Self-Tapping Screw 8-32 x 3/8 Slotted Bndg. Hd., Type F	2
17	00-108202-00002	Heater	1
18	00-292708	Spacer - Heater	2
19	00-108199-00001	Clamp - Air Heater	1
20	SD-009-09	Self-Tapping Screw 8-32 x 1/2 Slotted Bndg. Hd., Type F	1
21	00-108101	Shield - Heater	1
22	SD-009-08	Self-Tapping Screw 8-32 x 3/8 Slotted Bndg. Hd., Type F	1
23	00-114707	Terminal & Mounting Board Assy. (480 V.)	1
24	00-293555-00002	Transformer & Terminal Assy. (480 V., 60 Hz.)	1
25	00-293555	Transformer & Terminal (480 V., 50 Hz.)	1
26	FE-022-74	Fuse (Buss #FNQ-6/10)	2
27	SC-019-33	Mach. Screw 8-32 x 1/2 Slotted Bndg. Hd	2
28	NS-009-12	Nut 8-32 Hex	2
29	WL-007-07	Lockwasher #8 External Shakeproof	2
30	SD-009-08	Self-Tapping Screw 8-32 x 3/8 Slotted Bndg. Hd., Type F	2
31	SC-008-09	Mach. Screw 10-24 x 3/8 Slotted Rd. Hd	3
32	WL-007-12	Lockwasher #10 External Shakeproof	3
33	SD-009-08	Self-Tapping Screw 8-32 x 3/8 Slotted Bndg. Hd., Type F	2
34	00-186727	Plate - Control Mounting	1
	00-293215	Barrier - Control Box (480 V., 50 Hz.)	1

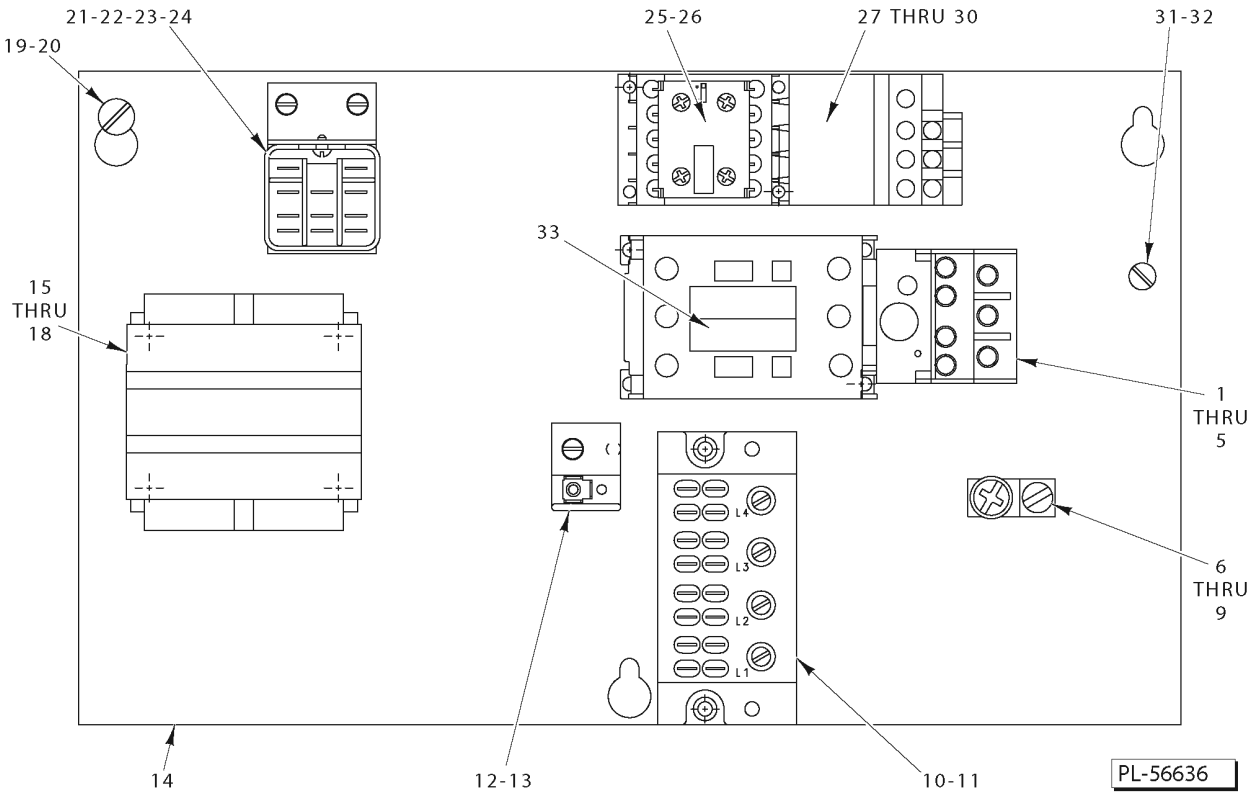

CONTROL PANEL
(ML-134214, ML-134216, ML-134220, & ML-134221)

CONTROL PANEL
(ML-134214, ML-134216, ML-134220, & ML-134221)

ILLUS. PL-56636	PART NO.	NAME OF PART	AMT.
1	00-937850	Contactor Contactor (208 V., 60 Hz., 3 Ph.)	1
2	00-087713-094-3	Contactor (380-415 V., 50 Hz., 3 Ph.)	1
3	00-088196-024-2	Relay - Overload (380-415 V., 50 Hz., 3 Ph.)	1
4	00-937851-00001	Relay - Overload (208 V., 60 Hz., 3 Ph.)	1
5	SD-009-09	Self-Tapping Screw 8-32 x 1/2 Slotted Bndg. Hd	2
6	00-118544-00002	Lug	1
7	SC-114-29	Mach. Screw 1/4-20 x 3/8 Phil. Pan Hd	1
8	WL-007-14	NLA - Obsolete--Lockwasher 1/4 Medium	1
9	NS-046-38	Mach. Nut 1/4-20 Hex (SST)	1
10	00-294325-00021	Block - Terminal (4 Pole)	1
11	SD-038-03	Self-Tapping Screw 10-16 x 3/4 Slotted Truss Hd., Type B (SST)	2
12	00-873203-00002	Block - Terminal (Modified)	1
13	SD-009-24	Self-Tapping Screw 6-32 x 3/8 Slotted Rd. Hd., Type F	1
14	00-186727	Plate - Control Mounting	1
15	00-478962	Transformer & Fuse Block Assy. (380-415 V., 50 Hz., 3 Ph.)	1
16	SD-009-08	Self-Tapping Screw 8-32 x 3/8 Slotted Bndg. Hd., Type F	4
17	FE-025-20	Fuse (0.2 Amp.) (600 V.) (380-415 V., 50 Hz., 3 Ph.)	2
18	FE-025-58	Fuse (0.3 Amp.) (600 V.) (380-415 V., 50 Hz., 3 Ph.)	1
19	SC-008-09	Mach. Screw 10-24 x 3/8 Slotted Rd. Hd	3
20	WL-007-12	Lockwasher #10 External	3
21	00-186748	Bracket - Relay Mounting	1
22	00-087714-020-3	Relay 3 P.D.T. (240VAC)	1
23	00-087714-020-5	Relay 3 P.D.T. (208VAC)	1
24	SD-009-24	Self-Tapping Screw 6-32 x 3/8 Slotted Rd. Hd., Type F	4
25	00-087711-00266	Switch - Auxiliary	1
26	SD-038-96	Self-Tapping Screw 6-32 x 1/2 Slotted Phil. Rd. Hd., Type F	2
27	00-087713-089-3	Contactor (208 V., 60 Hz., 3 Ph.)	1
28	00-087713-089-2	Contactor (380-415 V., 50 Hz., 3 Ph.)	1
29	00-088196-017-1	Relay - Overload (208 V., 60 Hz., 3 Ph.)	1
30	00-088196-017-2	Relay - Overload (380-415 V., 50 Hz., 3 Ph.)	1
31	SD-009-08	Self-Tapping Screw 8-32 x 3/8 Slotted Bndg. Hd., Type F	1
32	WL-007-12	Lockwasher #10 External	1
33	00-937848	Switch - Auxiliary	2

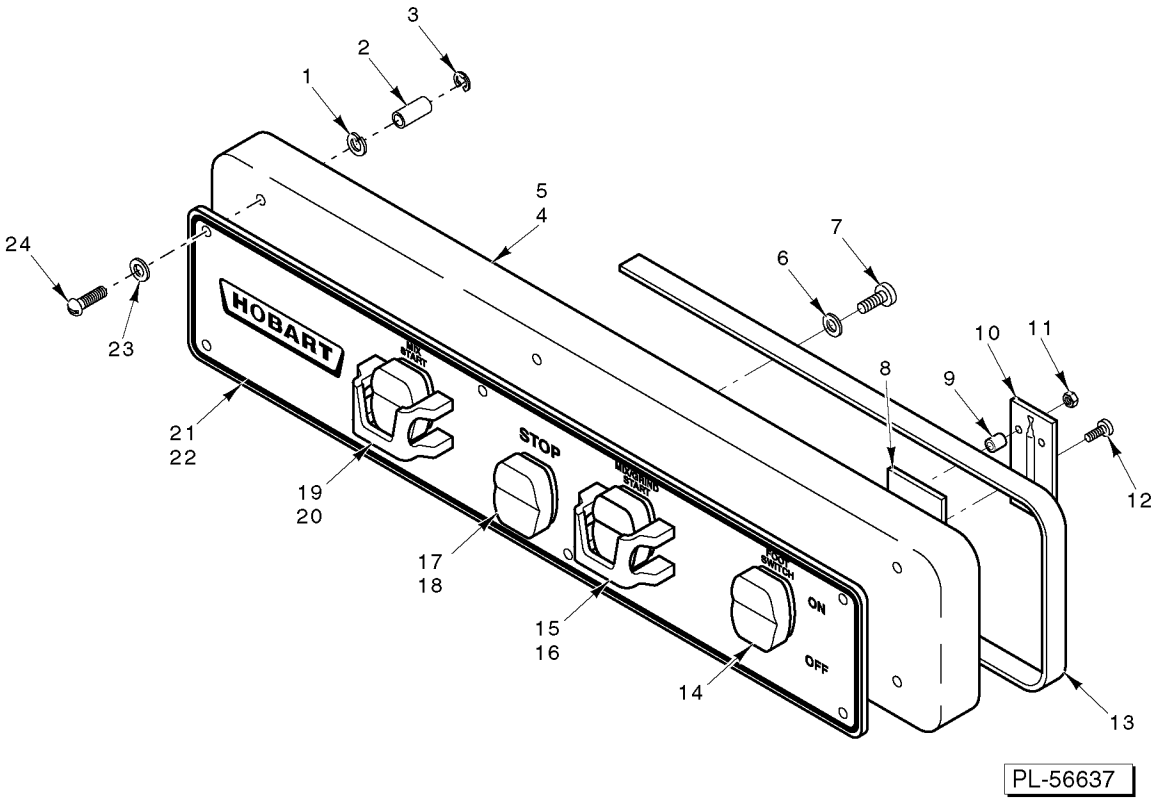

OPERATOR'S PANEL
(ML-38397 AND ML-38401)

OPERATOR'S PANEL
(ML-38397 AND ML-38401)

ILLUS. PL-56637	PART NO.	NAME OF PART	AMT.
1	WL-006-17	Lockwasher 1/4 Helical (SST)	6
2	00-292917	Spacer - Switch Cover	6
3	00-067500-00058	O-Ring	6
4	00-186736-00001	Switch Cover Assy. (60 Hz.)	1
5	00-292998-00001	Switch Cover Assy. (50 Hz.)	1
6	WS-002-14	Washer	8
7	00-123109	Screw 6-32 x 3/8 Serrated Hd	8
8	00-124022	Insulator - Reed Mounting Board	4
9	00-118349-00003	Spacer - Control Panel	16
10	00-294854	Reed Mounting Board Assy	4
11	NS-031-01	Stop Nut 6-32 Hex Special	8
12	SD-009-40	Self-Tapping Screw 6-32 x 3/4 Phil. Pan Hd., Type F	8
13	00-102825-00003	Gasket (Switch Cover)	1
14	00-120872-00003	Switch - Select	1
15	00-186739	Guard - Switch	1
16	00-120872-00002	Switch - Start	1
17	00-120872-00004	Switch - Stop (60 Hz.) (Shown)	1
18	00-087711-223-1	Switch - Push Pull (50 Hz.)	1
19	00-186739	Guard - Switch	1
20	00-120872-00002	Switch - Start	1
21	00-186741	Panel - Trim (60 Hz.)	1
22	00-292997	Panel - Trim (50 Hz.)	1
23	WS-017-06	Washer (SST)	6
24	SC-117-90	Mach. Screw 1/4-20 x 1 3/8 Slotted Rd. Hd. (SST)	6

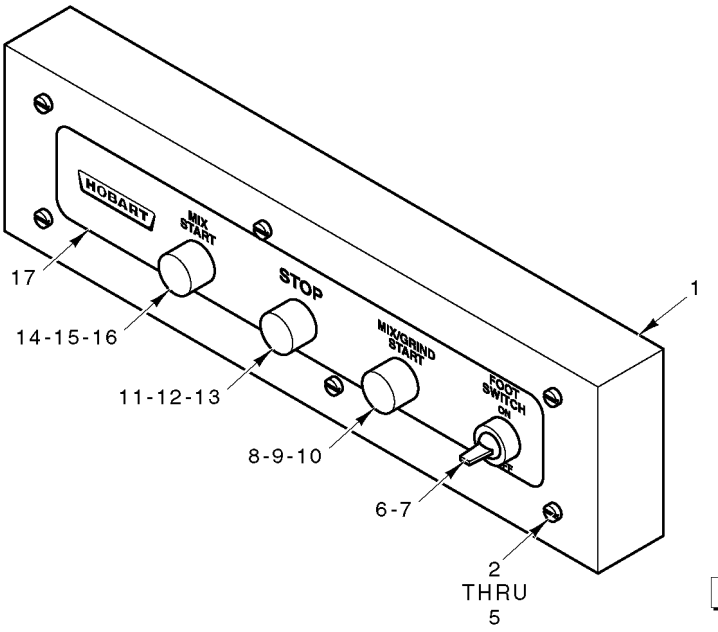

OPERATOR'S PANEL
(ML-134214, ML-134216, ML-134220, & ML-134221)

(ML-134214, ML-134216, ML-134220, & ML-134221)

OPERATOR'S PANEL
(ML-134214, ML-134216, ML-134220, & ML-134221)

ILLUS. PL-56668	PART NO.	NAME OF PART	AMT.
1	00-875455	Box - Operator Control Wldt	1
2	SC-128-44	Mach. Screw 1/4-20 x 2 1/4 Slotted Rd. Hd. (SST)	6
3	WL-006-17	Lockwasher 1/4 Helical (SST)	6
4	00-875537	Spacer	6
5	00-067500-00058	O-Ring	6
6	00-478752-00005	Switch - Select	1
7	00-087711-322-3	Block - Contact	1
8	00-478752-00003	Switch - Start	1
9	00-873427	Cap - Protective	1
10	00-087711-322-3	Block - Contact	1
11	00-478752-00008	Switch - Stop	1
12	00-873427-00002	Cap - Protective	1
13	00-087711-322-5	Block - Contact	1
14	00-478752-00003	Switch - Start	1
15	00-873427	Cap - Protective	1
16	00-087711-322-3	Block - Contact	1
17	00-875456	Trim - Panel	1
	00-522898	Tie - Cable	3
	SC-021-14	Mach. Screw 8-32 x 3/8 Slotted Rd. Hd. (SST)	2
	WL-014-05	Lockwasher #8 External Shakeproof (SST)	2
	SC-060-85	Mach. Screw 10-24 x 1 Slotted Rd. Hd	1
	00-478220-00001	Heater (208 V.)	1
	00-478220-00002	Heater (240 V.)	1
	SC-041-50	Cap Screw 1/4-20 x 1/2 Hex Hd. (SST) (Use W/478220)	2
	WS-017-06	Washer (SST) (Use W/478220)	2
	WL-010-01	Lockwasher #8 External Shakeproof (Use W/478220)	2
	00-520228	Adhesive (Loctite #242, Blue) (Use W/478220)	AR

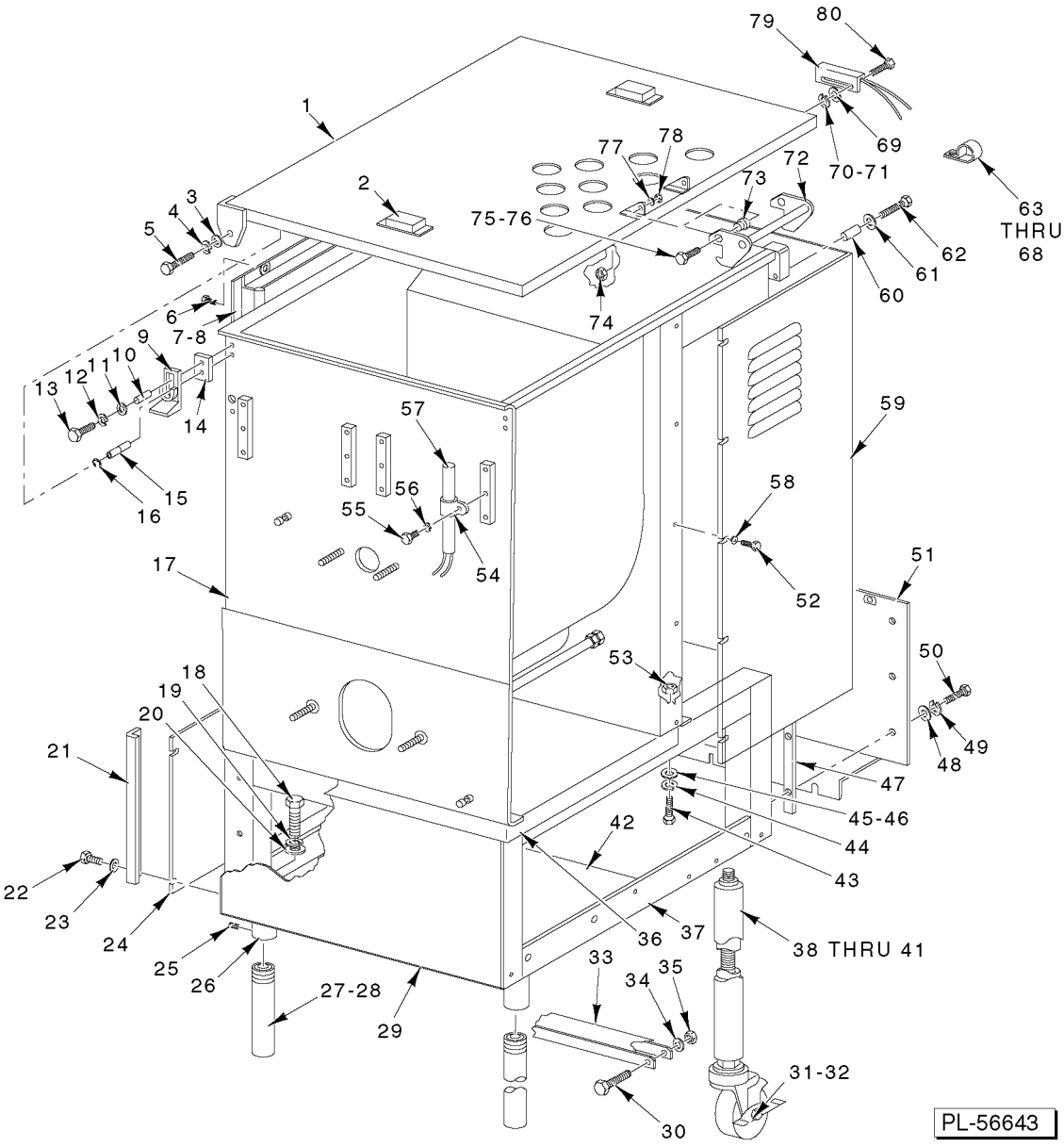

HOPPER AND FRAME

HOPPER AND FRAME

ILLUS. PL-56643	PART NO.	NAME OF PART	AMT.
1	00-186742	Lid Assy. (Incls. Item 2)	1
2	00-290160	Magnet	2
3	WS-008-48	Washer (SST)	1
4	WL-006-23	Lockwasher 5/16 Helical (SST)	1
5	SC-120-99	Cap Screw 5/16-18 x 2 1/4 Hex Hd	1
6	SC-053-05	Mach. Screw 10-24 x 3/8 Slotted Truss Hd. (SST)	2
7	00-186753	Raceway & Gasket Assy. (Incls. Item 8)	1
8	00-102825-00004	Gasket (Raceway)	1
9	00-186654	Block - Cover Stop	1
10	00-186661-00001	Bushing - Pivot	1
11	WS-005-39	Washer (SST)	1
12	WL-006-23	Lockwasher 5/16 Helical (SST)	1
13	SC-120-32	Cap Screw 5/16-18 x 1 1/2 Hex Hd	1
14	00-186663	Spacer - Block	1
15	00-186625	Bushing - Pivot	1
16	RR-004-05	Retaining Ring	1
17	00-186683-00001	Hopper (Std.)	1
18	SC-062-51	Cap Screw 5/8-11 x 1 1/2 Hex Hd	4
19	WL-004-20	Lockwasher 5/8 Helical	4
20	WS-030-07	Washer	4
21	00-186643	Cover - Corner Angle	4
*22	SD-036-39	Self-Tapping Screw 10-24 x 3/8 Slotted Truss Hd., Type T (SST)	8
**	SC-053-02	Mach. Screw 10-24 x 1/2 Slotted Truss Hd. (SST)	8
23	WS-019-10	Washer (SST)	8
24	00-186653	Cover - Side	2
25	SC-117-84	Set Screw 1/4-20 x 5/16 Hex Hdls., Cup Pt. (SST)	8
26	00-186722	Leg	4
27	00-186669	Foot	4
28	00-186730	Leg Assy. (Std. W/Foot) (Incls. Items 18, 19, 20, 25, 26, & 27)	4
29	00-186651	Cover - Front Panel	1
30	SC-097-16	Cap Screw 1/4-20 x 2 3/4 Hex Hd	2
31	00-186724	Caster - Rigid	AR
32	00-186725	Caster - Locking (Swivel)	AR
33	00-292902	Bracket - Rigid Caster	1
34	WL-006-17	Lockwasher 1/4 Helical (SST)	2
35	NS-015-01	Nut 1/4-20 Hex (SST)	2
36	00-186652	Cover - Top	1
37	00-186620	Frame	1
38	00-292904	Adjustable Leg & Rigid Caster Assy. (Frt. Long Adj.) (17 1/2 Max) (Incls. Item 31)	AR
39	00-292602	Adjustable Leg & Swivel Caster Assy. (Long Adj.) (17 1/2 Max) (Incls. Item 32)	AR
40	00-292605	Adjustable Leg & Swivel Caster Assy. (Short Adj.) (12 1/4 Max) (Incls. Item 32)	AR
41	00-186731	Leg Assy. (Std. W/Casters) (Incls. Items 18, 19, 20, 25, 26, & 32)	4
42	00-186686-00001	Cover - Frame Bottom	1
43	SC-041-31	Cap Screw 3/8-16 x 1 1/4 Hex Hd. (SST)	7
44	WL-006-28	Lockwasher 3/8 Helical (SST)	7
45	WS-018-04	Washer (SST)	7
46	WS-030-05	Washer (SST)	7
47	00-186695	Plate - Nut	2
48	WS-017-08	Washer (SST)	6
49	WL-006-23	Lockwasher 5/16 Helical (SST)	6
50	SC-041-11	Cap Screw 5/16-18 x 3/4 Hex Hd. (SST)	6
51	00-186650-00001	Cover - Lower Back	1
*52	SD-036-39	Self-Tapping Screw 10-24 x 3/8 Slotted Truss Hd., Type TT (SST)	AR
**	SC-053-02	Mach. Screw 10-24 x 1/2 Slotted Truss Hd. (SST)	AR
53	NS-015-13	Nut 3/8-16 Hex (SST)	7

HOPPER AND FRAME

ILLUS. PL-56643	PART NO.	NAME OF PART	AMT.
54	00-108199-00001	Clamp - Air Heater (ML-38397 & ML-38401 - Previous Construction)	1
55	SC-009-56	Mach. Screw 8-32 x 3/8 Slotted Rd. Hd	1
56	WL-010-01	Lockwasher #8 External Shakeproof	1
57	00-122345-00003	Heater Assy. (Ceramic) (ML-38397 & ML-38401 - Previous Construction)	1
58	WS-019-10	Washer (SST)	AR
59	00-186645-00001	Cover - Top Back	1
60	00-186661-00002	Bushing - Pivot	1
61	WL-006-23	Lockwasher 5/16 Helical (SST)	1
62	SC-120-32	Cap Screw 5/16-18 x 1 1/2 Hex Hd	1
63	00-078752-00001	Clamp 11/16 (ML-134214 & ML-134216)	1
64	00-078752-00002	Clamp 1/4 P (ML-134214)	1
65	SC-062-50	Cap Screw 10-24 x 5/8 Hex Hd	1
66	WS-019-10	Washer (SST)	1
67	WL-006-07	Lockwasher #10 Helical (SST)	1
68	NS-009-22	Mach. Nut 10-24 Hex	1
69	WS-019-10	Washer (SST)	2
70	NS-009-22	Mach. Nut 10-24 Hex	2
71	WL-006-07	Lockwasher #10 Helical (SST)	2
72	00-186698	Handle Assy	1
73	00-289854	Pivot - Lid Stop	2
74	NS-010-16	Nut 10-24 Hex (Brass)	2
75	SC-041-01	Cap Screw 1/4-20 x 3/4 Hex Hd. (SST)	2
76	00-520228	Adhesive - Loctite	AR
77	WL-006-17	Lockwasher 1/4 Helical	2
78	NS-025-04	Crown Nut 1/4-20 (SST)	2
79	00-087711-215-2	Switch - Reed (Interlock)	1
80	SC-062-30	Cap Screw 10-24 x 5/8 Hex Hd	2
	00-295269	Leg Assy. (Set of 4, Std. W/Foot) (Packaged)	1
	00-295271	Leg Assy. (Set of 4, Std. W/Caster) (Packaged)	1
	00-295276	Leg Assy. (Set of 4, Short Adj.) (Packaged)	1
	00-295282	Leg Assy. (Set of 4, Long Adj.) (Packaged)	1

* Machines built before 7/15
** Machines built 7/15 or later

NOTES

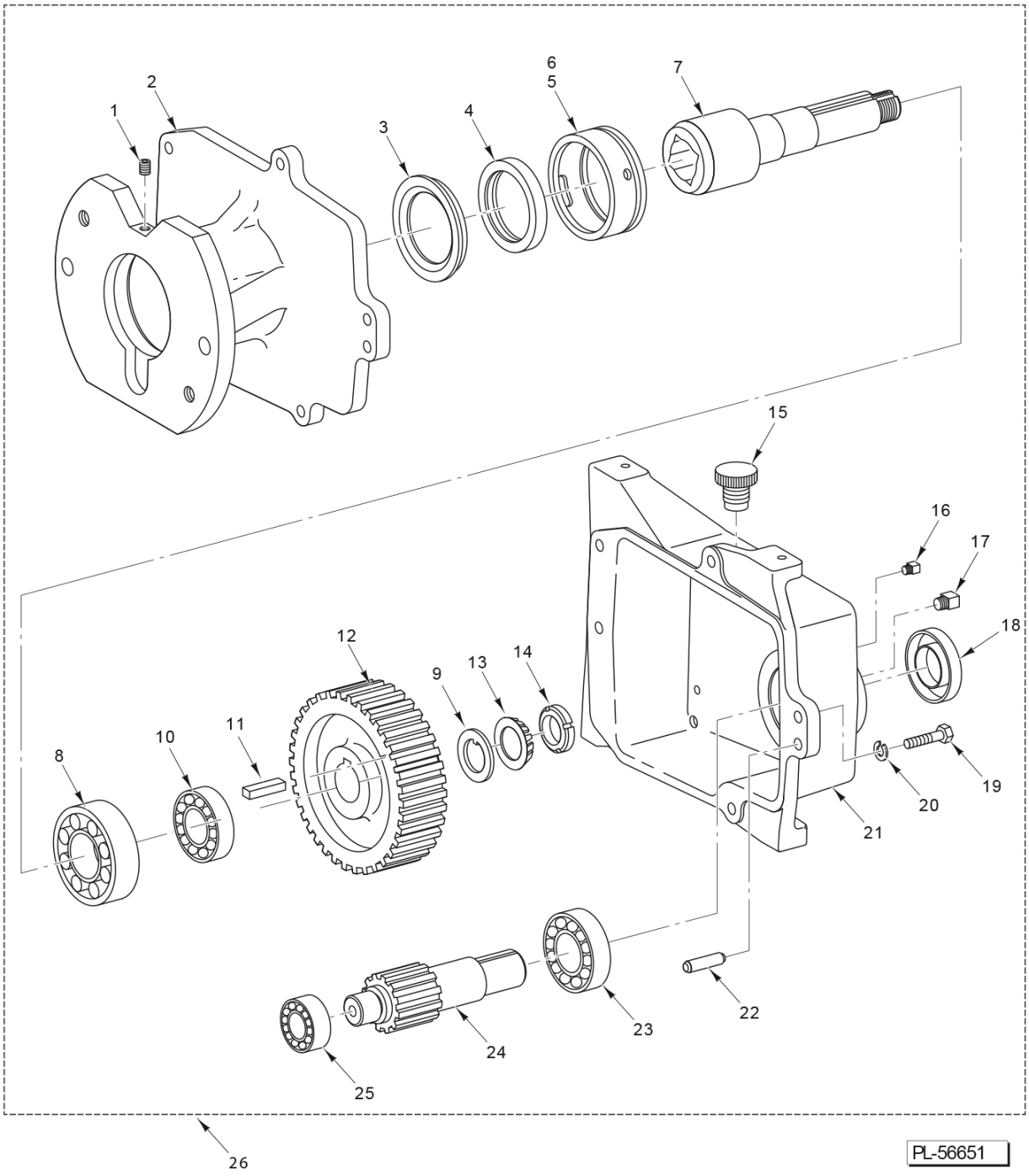

GRIND TRANSMISSION
(PREVIOUS CONSTRUCTION)

GRIND TRANSMISSION
(PREVIOUS CONSTRUCTION)

ILLUS. PL-56651	PART NO.	NAME OF PART	AMT.
1	SC-047-35	Set Screw 5/16-18 x 1/2 Hex Hdls., Knife Cup Pt	1
2	00-186627	Hub - Attachment	1
3	00-105196	Seal - Outer Conveyor	1
4	00-108591	Seal - Square Drive Shaft	1
5	00-186655	Retainer - Seal	1
6	00-067500-00052	O-Ring	1
7	00-186635	Shaft - Grind Worm Drive	1
8	BR-002-28	Roller Bearing - Cone & Cup Assy. (1.625 x 3.25)	1
9	WS-031-36	WASHER,1.188 X 2.200 X .125	1
10	BR-002-20	Roller Bearing - Cone & Cup Assy. (1.375 x 2.56)	1
11	00-012430-00210	Key 5/16 x 5/16 x 1 3/8	1
12	00-186642	Gear (57T)	1
13	WL-017-07	Lockwasher - Bearing Lock Nut	1
14	NS-034-07	Lock Nut N.D. #N-06 Lock Nut - Bearing	1
15	00-108963-00002	Plug - Oil Fill	1
16	FP-028-42	Plug - Pipe 1/8	1
17	FP-028-38	Plug - Pipe 3/8	1
18	00-186657	Seal - Oil	1
19	SC-062-22	Cap Screw 3/8-16 x 1-1/4 Hex Hd	5
20	WL-006-28	Lockwasher 3/8 Helical (SST)	5
21	00-186626	Case - Gear	1
22	00-508199	Dowel Pin	2
23	BB-007-21	Ball Bearing SKF 6207BE	1
24	00-186636	Shaft - Pinion (18T)	1
25	BB-018-33	Ball Bearing - Fafnir #205K	1
26	00-186712	Transmission Assy. (Includes Items 1 through 25)	1

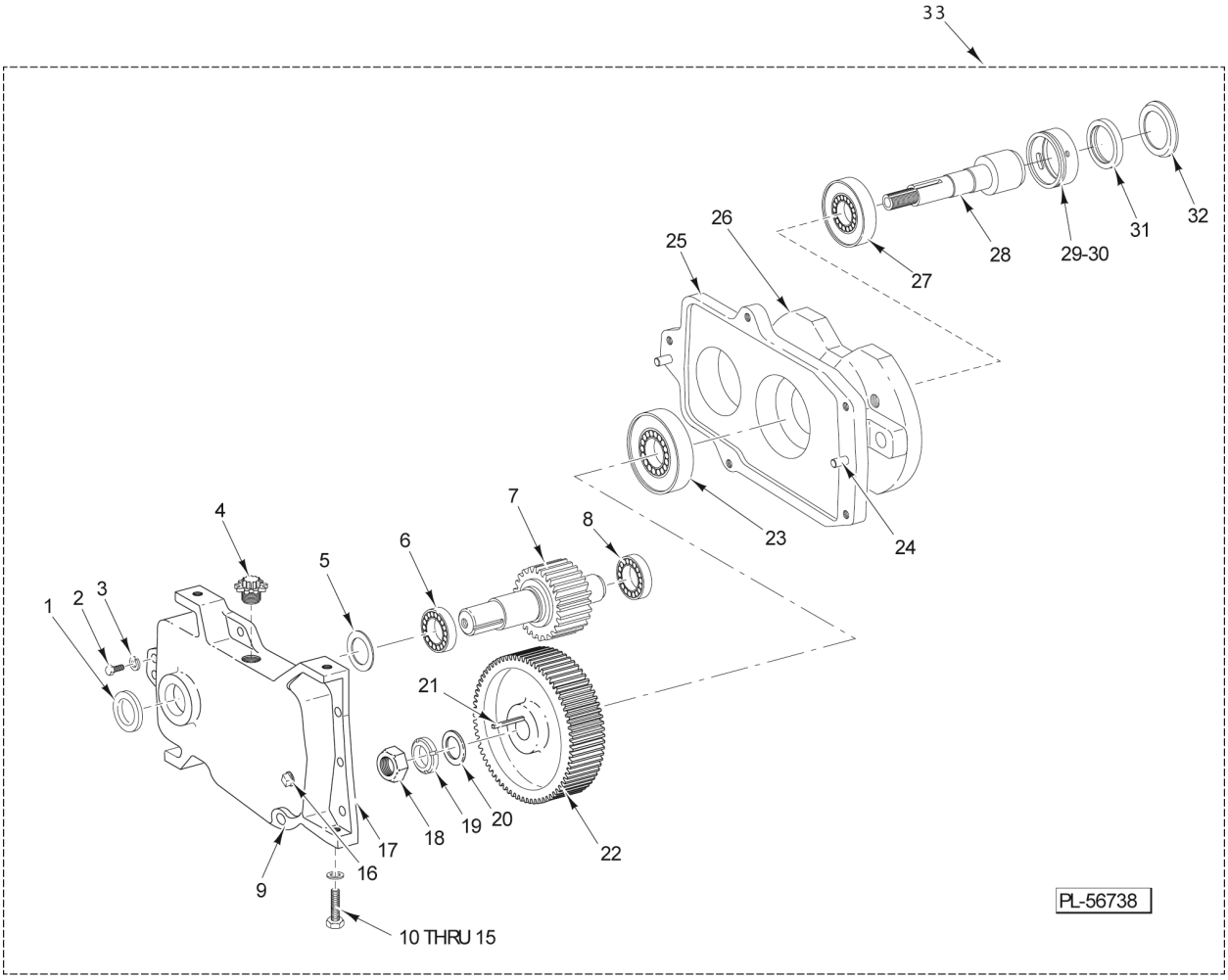

GRIND TRANSMISSION
(CURRENT CONSTRUCTION)

GRIND TRANSMISSION
(CURRENT CONSTRUCTION)

ILLUS. PL-56738	PART NO.	NAME OF PART	AMT.
1	00-186657	Seal - Oil	1
2	SC-062-22	Cap Screw 3/8-16 x 1-1/4 Hex Hd	5
3	WL-006-28	Lockwasher 3/8 Helical (SST)	5
4	00-108963-00002	Plug - Oil Fill	1
5	SL-003-11	Spring - Loading N.D. 72	1
6	BB-007-21	Ball Bearing - N.D. 3207	1
7	00-477940	Shaft - Pinion (18T)	1
8	BB-018-33	Ball Bearing Fahnir #205KF	1
9	FP-028-38	Plug - Pipe 3/8	1
10	SC-062-22	Cap Screw 3/8-16 x 1-1/4 Hex Hd	2
11	WL-006-28	Lockwasher 3/8 Helical (SST)	2
12	00-186646-00001	Shim (0.120 Thk.)	AR
13	00-186646-00002	Shim (0.060 Thk.)	AR
14	00-186646-00003	Shim (0.030 Thk.)	AR
15	00-186646-00004	Shim (0.018 Thk.)	AR
16	FP-028-42	Plug - Pipe 1/8	1
17	00-873483-00002	Case - Gear	1
18	NS-034-07	Lock Nut N.D. #N-06	1
19	WS-031-36	Washer	1
20	WL-017-07	Lockwasher - Bearing Lock Nut	1
21	00-012430-00215	Key 5/16 x 5/16 x 1 1/2	1
22	00-477939	Gear (57T)	1
23	BR-002-20	Bearing Assy. - Roller 1.37 x 2.56	1
24	00-508199	Pin Dowel (Mach.)	2
25	00-477946-00002	Hub - Attachment	1
26	SC-047-35	Set Screw 5/16-18 x 1/2 Hex Hdls., Knife Cup Pt	1
27	BR-002-28	Bearing Assy. - Roller 1.62 x 3.25	1
28	00-186635	Shaft - Grind Worm Drive	1
29	00-186655	Retainer - Seal	1
30	00-067500-00052	O-Ring (Rubber)	1
31	00-108591	Seal - Sq. Drive Shaft	1
32	00-105196	Seal - Outer Conveyor	1
33	00-875585	Transmission Assy. (Includes Items 1 through 32)	1

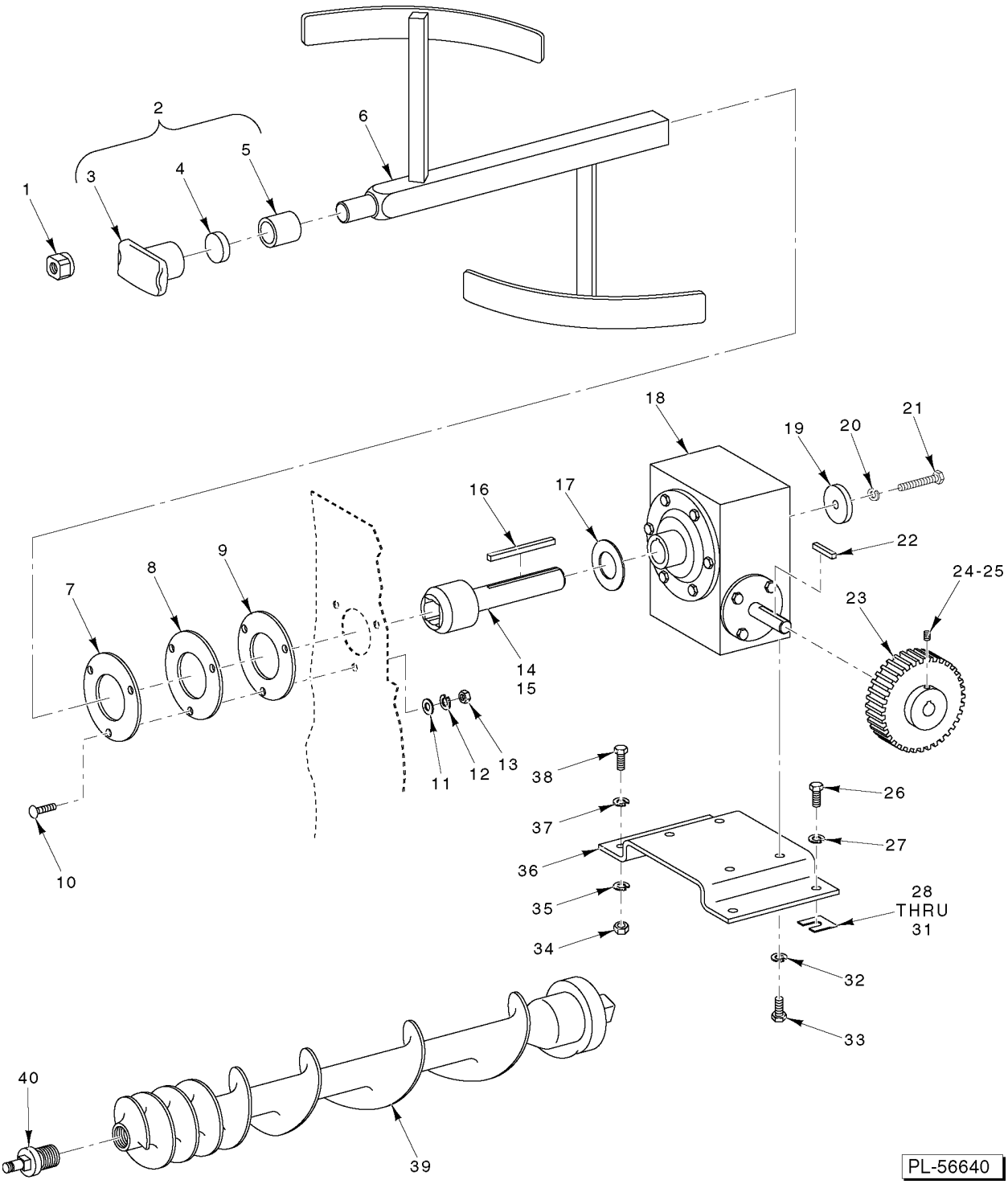

GRIND CONVEYOR AND MIXING ARM/TRANSMISSION

GRIND CONVEYOR AND MIXING ARM/TRANSMISSION

ILLUS. PL-56640	PART NO.	NAME OF PART	AMT.
1	NS-048-57	Nut 5/8-11 Flanged	2
2	00-186728	Pilot Bushing Assy	1
3	00-186629	Bushing	1
4	00-186660	Washer - Thrust	1
5	00-186659	Bearing - Pilot Bushing	1
6	00-186718	Arm - Mixing	1
7	00-186649	Washer - Backing	1
8	00-186656	Seal - Mixing Arm Drive Shaft	1
9	00-186649	Washer - Backing	1
10	SC-094-20	Bolt Sq. Neck 5/16-18 x 1 Rd. Hd. (SST)	3
11	WS-005-39	Washer (SST)	3
12	WL-006-23	Lockwasher 5/16 Helical (SST)	3
13	NS-015-11	Nut 5/16-18 Hex (SST)	3
14	00-875578	Shaft - Mixing Arm Square Drive	1
15	00-186706	Plug	1
16	00-012430-00196	Key 1/4 x 1/4 x 4-3/4	1
17	00-186702	Washer - Shim	AR
18	00-186696	Gear Reducer	1
19	00-186703	Washer	1
20	WL-006-28	Lockwasher 3/8 Helical (SST)	4
21	SC-062-22	Cap Screw 3/8-16 x 1-1/4 Hex Hd	1
22	00-012430-00067	Key 3/16 x 3/16 x 1 1/2	1
23	00-186623-00001	Pulley - Driven (40T)	1
24	SC-088-46	Set Screw 10-24 x 3/8 Hex Hdls., Cup Pt	2
25	00-520228	Adhesive - Loctite	AR
26	SC-062-22	Cap Screw 3/8-16 x 1-1/4 Hex Hd	2
27	WL-006-28	Lockwasher 3/8 Helical (SST)	2
28	00-186646-00001	Shim (0.120 In.)	AR
29	00-186646-00002	Shim (0.060 In.)	AR
30	00-186646-00003	Shim (0.030 In.)	AR
31	00-186646-00004	Shim (0.018 In.)	AR
32	WL-006-28	Lockwasher 3/8 Helical (SST)	4
33	SC-118-12	Cap Screw 3/8-16 x 3/4 Hex Hd	4
34	NS-015-13	Nut 3/8-16 Hex (SST)	2
35	WL-006-28	Lockwasher 3/8 Helical (SST)	2
36	00-293444	Plate - Mounting	1
37	WS-026-02	Washer (SST)	2
38	SC-066-22	Cap Screw 3/8-16 x 1 1/4 Hex Hd	2
39	00-186641	Conveyor Screw Assy. (Incls. Item 40)	1
40	00-110576	Plate - Stud	1

25 00-186713 Belt - Flexa - Gear

PARTS NOT ILLUSTRATED

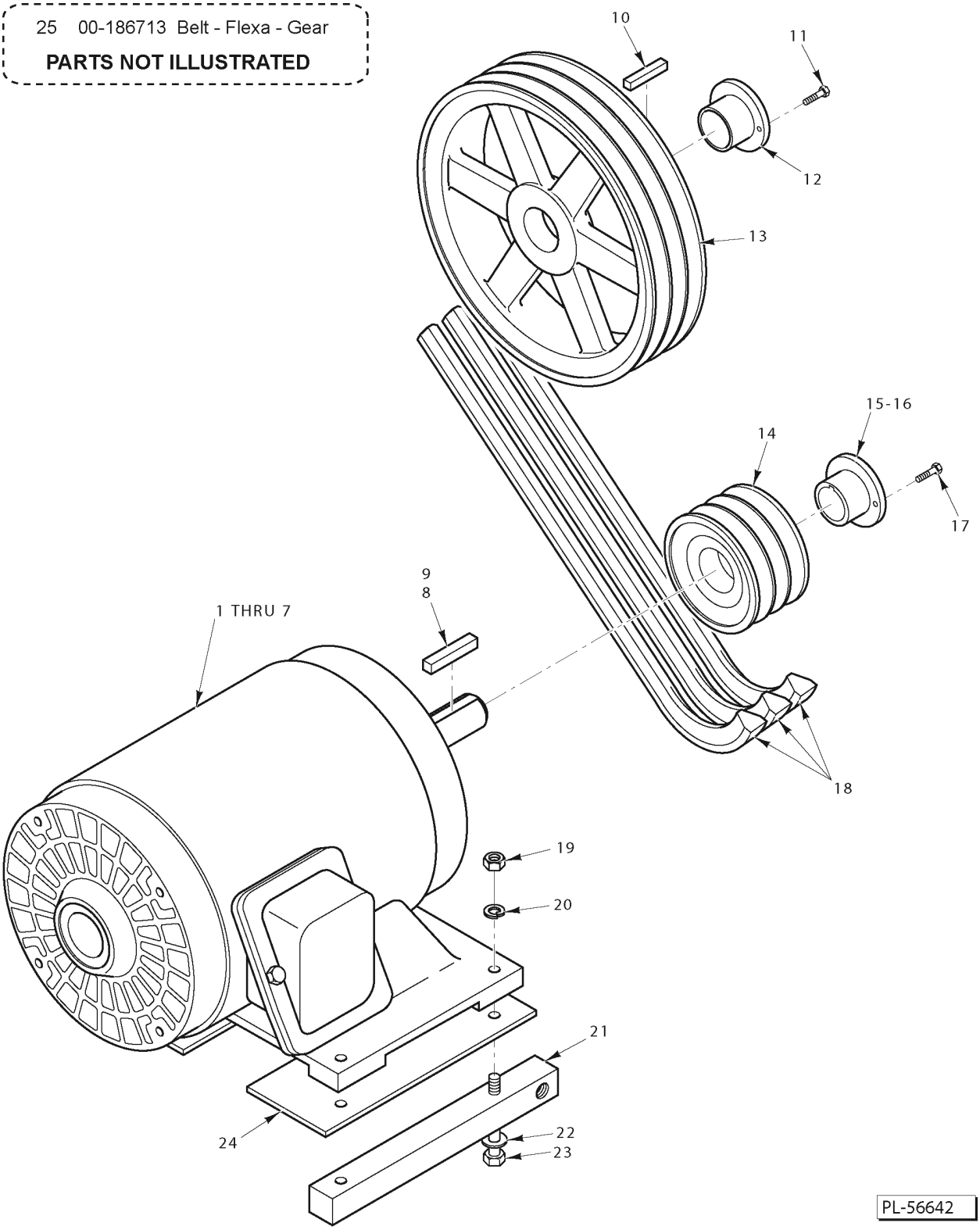

GRIND MOTOR/DRIVE UNIT

GRIND MOTOR/DRIVE UNIT

ILLUS. PL-56642	PART NO.	NAME OF PART	AMT.
1	00-435696-00003	Motor Assy. - Drive (208 V., 60 Hz., 3 Ph., 5 Hp.)	1
2	00-435696-00004	Motor Assy. - Drive (240/480 V., 60 Hz., 3 Ph., 5 Hp.)	1
3	00-435697-00003	Motor Assy. - Drive (208 V., 60 Hz., 3 Ph., 7.5 Hp.)	1
4	00-435697-00004	NLA - Obsolete--Motor - Grind (240/480 V., 60 Hz., 3 Ph., 7-1/2 Hp.)	1
5	00-293210-00001	Motor Assy. - Drive (240/480 V., 50 Hz., 3 Ph., 7.5 Hp.)	1
6	01-650122-00002	Motor - Grind 5HP (1 Ph.), Assy Motor Assy. - Drive (208-240 V., 60 Hz., 1 Ph., 5 Hp.)	1
7	FE-023-47	Strain Relief - Electrical (1 In.)	1
8	00-012430-00106	Key 3/16 x 5/16 1 1/4	1
9	00-012430-00163	Key 1/4 x 1/4 x 1-3/4	1
10	00-012430-00178	Key 1/4 x 1/4 x 1-1/2	1
11	SC-118-19	Cap Screw 1/4-20 x 3/4 Hex Hd	2
12	00-479615-00002	Hub	1
13	00-479615-00001	Pulley - Transmission	1
14	00-479613-00001	Pulley - Grind Motor	1
15	00-479613-00002	Hub (7.5 Hp.)	1
16	00-479613-00003	Hub (5 Hp.)	1
17	SC-118-19	Cap Screw 1/4-20 x 3/4 Hex Hd	2
18	BV-013-37	V - Belt (BX Cross Section)	3
19	NS-015-13	Nut 3/8-16 Hex (SST)	4
20	WL-006-28	Lockwasher 3/8 Helical (SST)	4
21	00-186694	Support - Motor Mount	2
22	WS-018-04	Washer (SST)	4
23	SC-097-31	Cap Screw 3/8-16 x 2 1/2 Hex Hd	4
24	00-186682	Cover - Motor Plate	1
25	00-186713	Belt - Flexa - Gear	1
	00-875243	Conversion Kit - Belt/Pulley Assy.(60Hz.,7.5 Hp.)(Incls. Items 12-15,18,&FP-028-38)	1
	00-875244	Conversion Kit - Belt/Pulley Assy.(60Hz.,5Hp.)(Incls.Items 12,13,14,16,18,&FP-028-38)	1
	00-875245	Conversion Kit - Belt/Pulley Assy.(50Hz.,7.5Hp.)(Incls. Items 12-15,18,&FP-028-38)	1

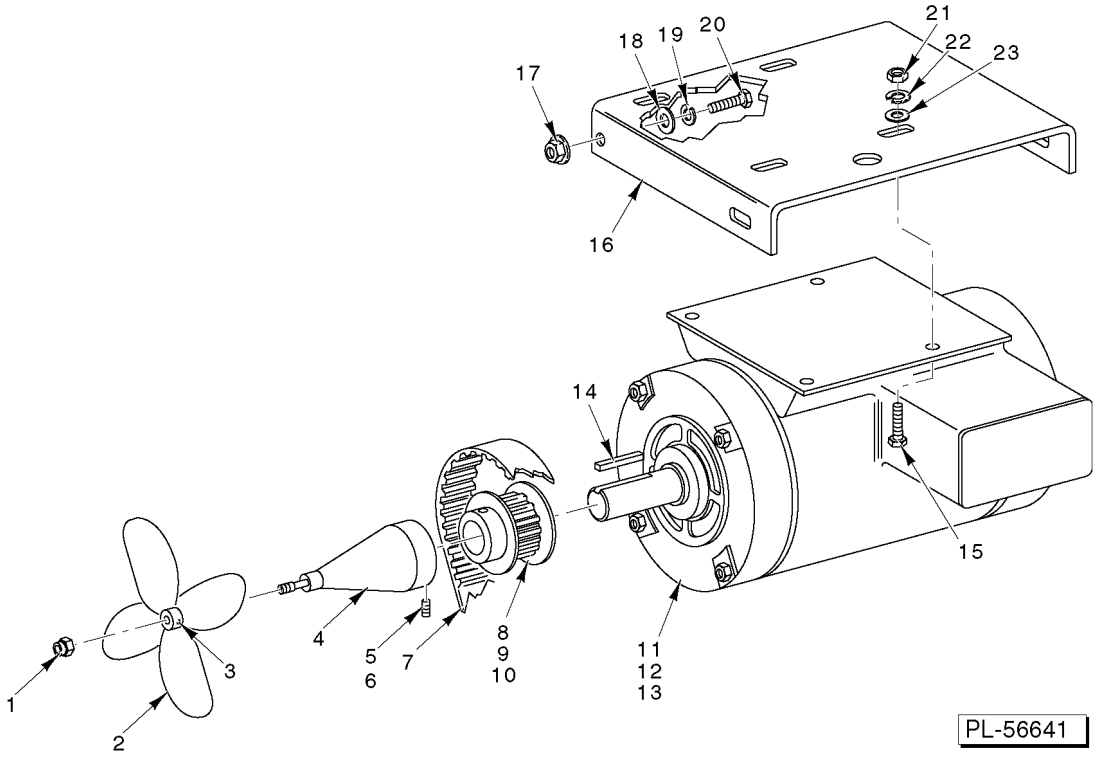

MIX ARM MOTOR/VENTILATING UNIT

MIX ARM MOTOR/VENTILATING UNIT

ILLUS. PL-56641	PART NO.	NAME OF PART	AMT.
1	NS-031-20	Stop Nut 1/4-20 Hex	1
2	00-186786	Blade - Fan	1
3	SC-075-30	Set Screw 8-32 x 3/16 Hdls., Cup Pt.	1
4	00-274696	Shaft - Fan Adapter	1
5	SC-117-84	Set Screw 1/4-20 x 5/16 Hex Hdls., Cup Pt. (SST)	1
6	00-520228	Adhesive - Loctite	AR
7	00-186714	Belt - Flexa-Gear	1
8	00-186622	Pulley - Driver (16T) (60 Hz.)	1
9	00-292996	Pulley - Driver (19T) (50 Hz.)	1
10	SC-075-30	Set Screw 8-32 x 3/16 Hex Hdls., Cup Pt.	1
11	00-435805-00002	Motor Assy. (208-240/480 V., 60 Hz., 3 Ph., 1 Hp.)	1
12	00-435806-00002	Motor Assy. (208-240 V., 60 Hz., 1 Ph., 1 Hp.)	1
13	00-293209-00001	Motor Assy. (240/480 V., 50 Hz., 3 Ph., 1 Hp.)	1
14	00-012430-00091	Key 3/16 x 3/16 x 1 3/8	1
15	SC-037-85	Cap Screw 5/16-18 x 1 Hex Hd	4
16	00-186689	Bracket - Upper Motor Mounting	1
17	NS-038-10	Lock Nut 3/8-16 Flange	4
18	WS-018-04	Washer (SST)	4
19	WL-006-28	Lockwasher 3/8 Helical	4
20	SC-041-31	Cap Screw 3/8-16 x 1-1/4 Hex Hd. (SST)	4
21	NS-013-14	Nut 5/16-18 Hex	4
22	WL-006-23	Lockwasher 5/16 Helical (SST)	4
23	WS-005-39	Washer (SST)	8

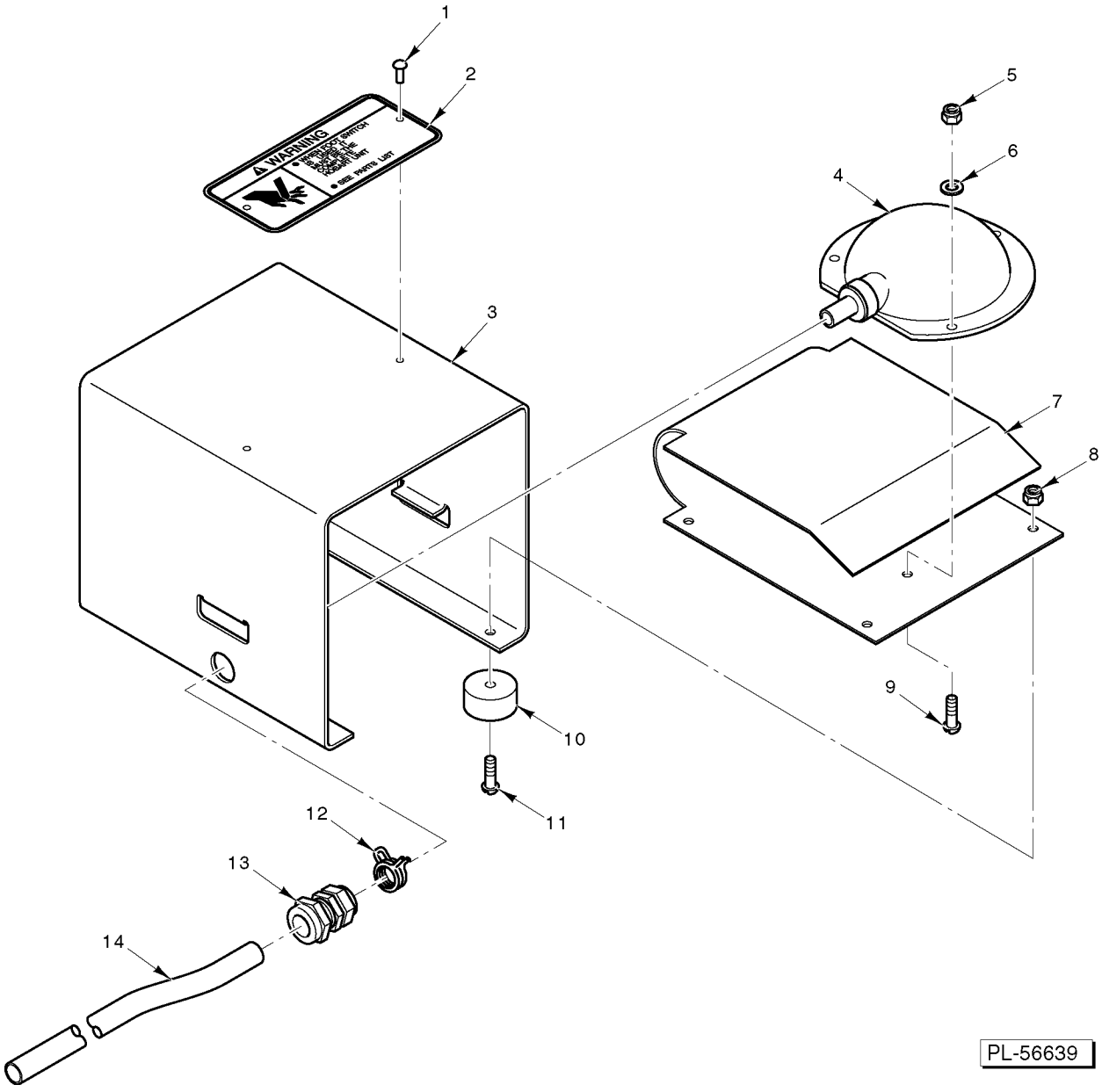

FOOT SWITCH

FOOT SWITCH

ILLUS. PL-56639	PART NO.	NAME OF PART	AMT.
1	00-123702	Stud - Weld	2
2	00-438131-00083	Plate - Warning	1
3	00-873544	Cover - Foot Switch	1
4	00-087711-214-1	Switch - Actuator	1
5	NS-031-08	Stop Nut Special 8-32 (SST)	3
6	WS-023-44	Washer (SST)	3
7	00-873543	Switch - Foot Pedal	1
8	NS-031-08	Stop Nut Special 8-32 (SST)	4
9	SC-021-15	Mach. Screw 8-32 x 1/2 Slotted Rd. Hd. (SST)	3
10	00-019105-00002	Bumper	4
11	SC-021-89	Mach. Screw 8-32 x 5/8 Slotted Rd. Hd. (SST)	4
12	00-115747-00008	Clamp - Hose	2
13	FE-024-10	Strain Relief NLA	1
14	00-946676	Tubing & Clamp Assy. (66 In.)	1
	00-873545	Foot Switch Assy. (Incls. Items 1 thru 14)	1

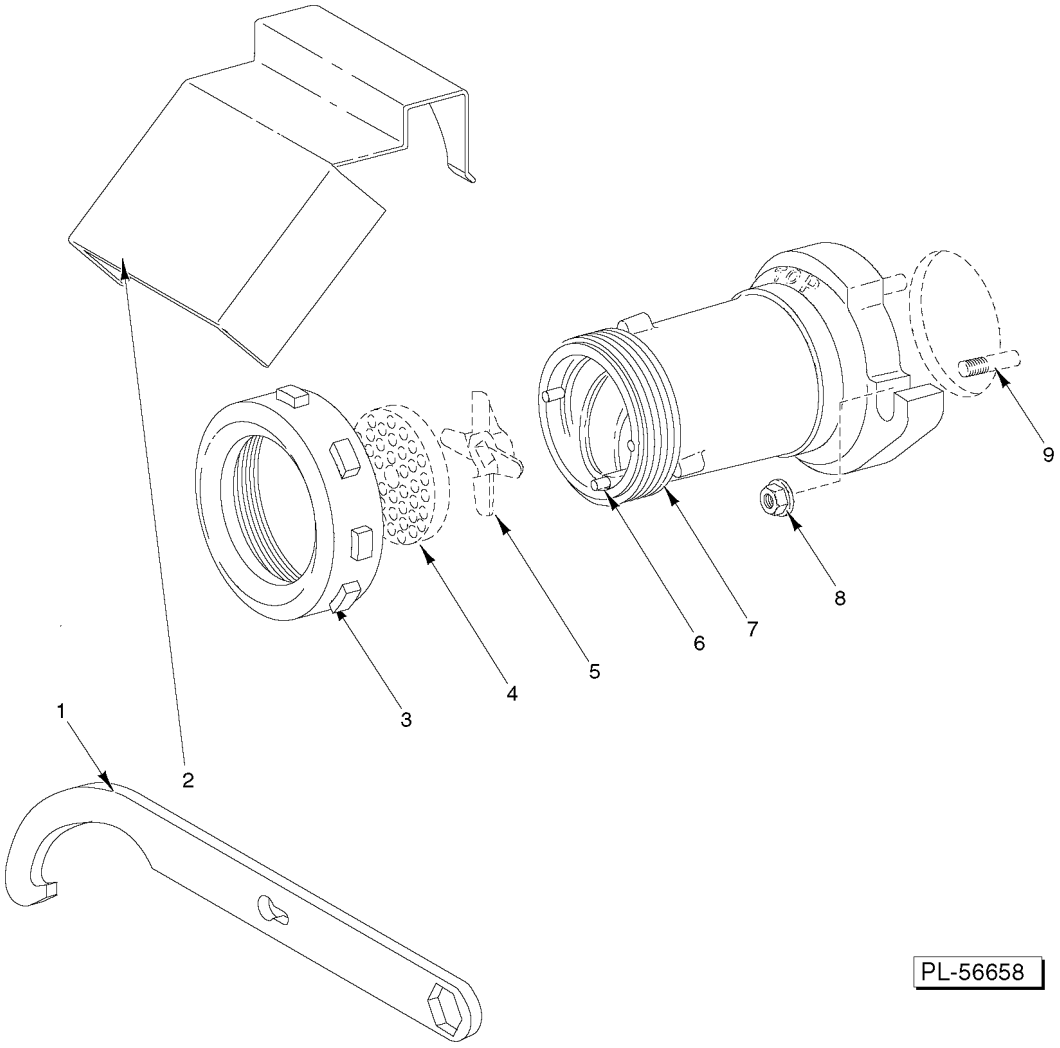

#32 GRINDER

#32 GRINDER

ILLUS. PL-56658	PART NO.	NAME OF PART	AMT.
1	00-873570	Wrench - Cylinder	1
2	00-875250	Meat Deflector (Packaged)	1
3	00-873697	Ring - Adjusting	3
6	00-105806	Pin - Plate	3
7	00-873720-00002	Cylinder #32 (Mach. SST)	1
8	NS-048-57	Nut 5/8-11 Flanged Hex	2
9	00-118266	Stud	2

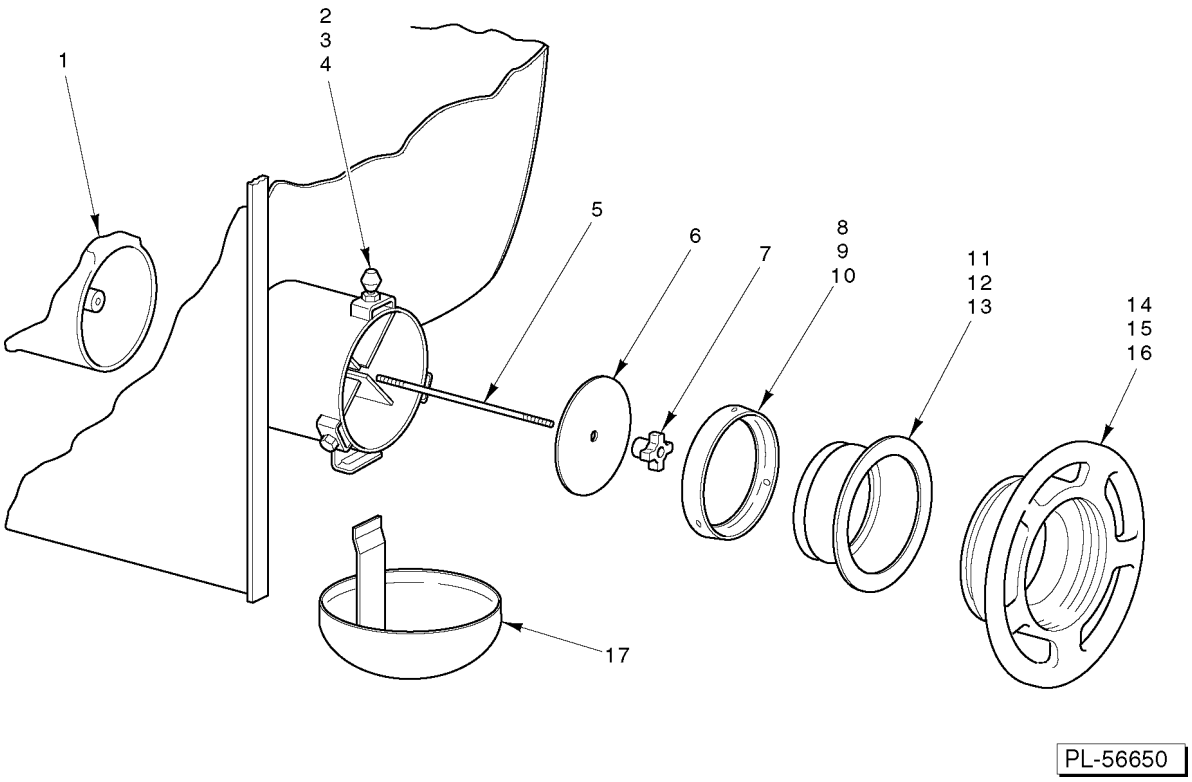

SIDE FEED

SIDE FEED

ILLUS. PL-56650	PART NO.	NAME OF PART	AMT.
1	00-186754	Plug - Side Feed Hopper	1
2	00-108197-00006	Thumb Screw (2 In. Lg.)	3
3	00-108197-00007	Thumb Screw (1-7/16 In. Lg.)	3
4	00-108197-00008	Thumb Screw (2-9/16 In. Lg.)	3
5	00-186755	Rod - Tie	1
6	00-107237	Cap - Hopper Feed	1
7	00-292420	Knob Assy	1
8	00-086111	Retainer - Adapter (#56 Size)	1
9	00-082154	Retainer - Adapter (#52 Size)	1
10	00-082153	Retainer - Adapter (#32 Size)	1
11	00-086110	Adapter (#56 Size)	1
12	00-082149	Adapter (#52 Size)	1
13	00-082146	Adapter (#32 Size)	1
14	00-080879-00002	Ring - Adapter Adj. (For 4352, 4046, & 4146 Stub Thd.) (Packaged)	1
15	00-081374-00002	Ring - Adapter Adj. (For 52-46 "Stub Thd.") (Packaged)	1
16	00-109738-00001	Ring - Adapter Adj. (For 4056, 4156, & 4356 Stub Thd.) (Packaged)	1
17	00-295109	Dripping Cup Assy	1
	00-186885	Hopper Feed Plug Assy. (Incls. Items 1 & 5)	1
	00-109369-00002	Adapter Assy. (#56 Size) (For Non-Hobart Choppers) (Incls. Items 3, 8, & 11)	1
	00-109370-00002	Adapter Assy. (#52 Size) (For Non-Hobart Choppers) (Incls. Items 2, 9, & 12)	1
	00-109371-00002	NLA - Obsolete--Adapter Assy. (#32 Size) (For Non-Hobart Choppers) (Incls. Items 4, 10, & 13)	1